Club Car®

2005 MAINTENANCE SERVICE SUPPLEMENT

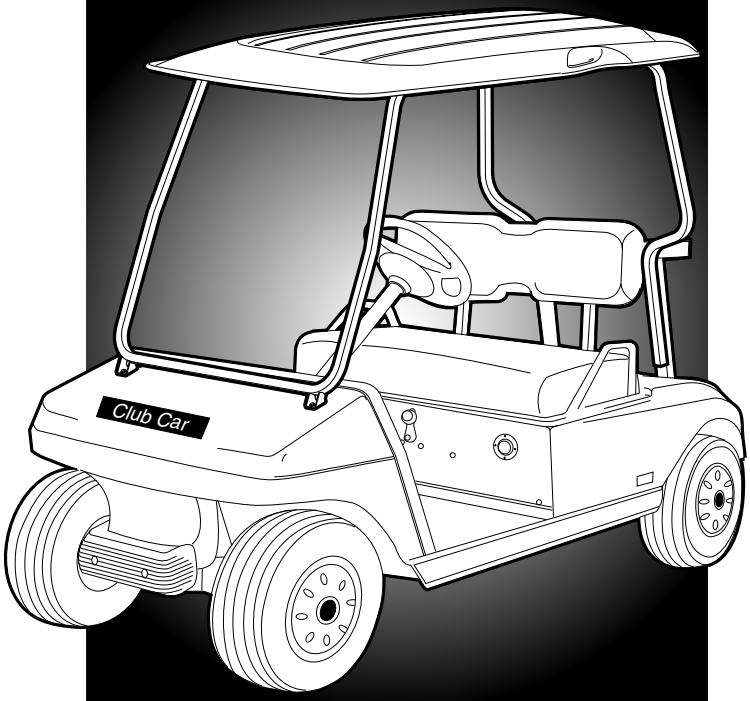

FE350 GASOLINE VEHICLES

MANUAL NUMBER 102680410
EDITION CODE 0405A00000

FOREWORD

Club Car vehicles are designed and built to provide the ultimate in performance efficiency; however, proper maintenance and repair are essential for achieving maximum service life and continued safe and reliable operation.

This supplement provides detailed information for the maintenance and repair of FE350 gasoline vehicles and should be used in conjunction with the appropriate maintenance and service manual. This supplement also provides detailed information for removing and replacing FE290 engines and transaxles, but does not contain information for the disassembly, repair or rebuilding of FE290 engines or transaxles. For complete detailed disassembly, repair or rebuild procedures, see the Engines and Drivetrain Components, Repair and Rebuild Manual (CCI P/N 102396501).

If you do not have the appropriate maintenance and service manual, you may order one from your local Club Car representative. Maintenance and service manuals available include the following:

2005 Turf/Carryall Vehicle Maintenance and Service Manual	**Publication Part No. 102680404**
2005 Transportation Vehicle Maintenance and Service Manual	**Publication Part No. 102680405**
Engines and Drivetrain Components, Repair and Rebuild Manual	**Publication Part No. 102396501**

This supplement and corresponding maintenance and service manual should be thoroughly reviewed prior to servicing the vehicle. The procedures provided must be properly implemented, and the DANGER, WARNING, and CAUTION statements must be heeded.

This manual was written for the trained technician who already has knowledge and skills in electrical and mechanical repair. If the technician does not have such knowledge and skills, attempted service or repairs to the vehicle may render the vehicle unsafe. For this reason, Club Car advises that all repairs and/or service be performed by an authorized Club Car distributor/dealer representative or by a Club Car factory-trained technician.

It is the policy of Club Car, Inc. to assist its distributors and dealers in continually updating their service knowledge and facilities so they can provide prompt and efficient service for vehicle owners. Regional technical representatives, vehicle service seminars, periodic service bulletins, maintenance and service manuals, and other service publications also represent Club Car's continuing commitment to customer support.

This supplement, used in conjunction with the appropriate maintenance and service manual, covers all aspects of typical vehicle service; however, unique situations do sometimes occur when servicing a vehicle. If it appears that a service question is not answered in this manual, you may write to us at: Club Car, Inc., P.O. Box 204658, Augusta, Georgia 30917-4658, USA, Attention: Technical Services, or contact a Club Car Technical Service Representative at (706) 863-3000, ext. 3580.

Copyright © 2005 Club Car, Inc.
Club Car, Carryall, and *ArmorFlex*
are registered trademarks of Club Car, Inc.
This manual effective July 28, 2004.

⚠ WARNING

- **Read Section 1 – Safety in the appropriate maintenance and service manual before attempting any service on the vehicle.**
- **Before servicing vehicle, read complete section(s) and any referenced information that may be relevant to the service or repair to be performed.**

NOTE: *This manual represents the most current information at the time of publication. Club Car, Inc. is continually working to further improve its vehicles and other products. These improvements may affect servicing procedures. Any modification and/or significant change in specifications or procedures will be forwarded to all Club Car and Carryall distributors/dealers and will, when applicable, appear in future editions of this manual.*

Club Car, Inc. reserves the right to change specifications and designs at any time without notice and without the obligation of making changes to units previously sold.

There are no warranties expressed or implied in this supplement. See the limited warranty found in the vehicle owner's manual or write to: Club Car, Inc., P.O. Box 204658, Augusta, Georgia 30917-4658, USA, Attention: Warranty Administration.

CONTENTS

SECTION 10 – PERIODIC MAINTENANCE

General Warning 10-1
Periodic Service Schedule 10-3
Periodic Lubrication Schedule 10-5
Engine Oil 10-6
  Engine Oil Level Check 10-6
  Oil Viscosity 10-7
Fueling Instructions 10-7
Battery 10-8

SECTION 11 – TROUBLESHOOTING AND ELECTRICAL SYSTEM

General Information 11-1
Troubleshooting Guide 11-1
Wiring Diagrams 11-6
Electrical System 11-13
Test Procedures 11-13
  Index of Test Procedures 11-13

SECTION 12 – ELECTRICAL COMPONENTS

Starter/Generator 12-1
Voltage Regulator 12-12
Key Switch 12-13
Solenoid 12-14
Fuse 12-16
Kill Limit Switch 12-16
Neutral Lockout Limit Switch 12-18
Neutral Lockout Cam 12-19
Reverse Buzzer Limit Switch 12-21
Low Oil Warning Light 12-22
Fuel Gauge/Hour Meter 12-22
Fuel Level Sending Unit 12-24
RPM Limiter 12-24
Ignition Coil 12-25
Oil Level Sensor 12-28
Relay 12-28
Headlights 12-29

Taillights 12-30
Taillight Bulb Removal 12-30
Voltage Limiter 12-31
Headlight Switch 12-32
Brake Light Relay 12-33
Park Brake Limit Switch 12-34
Brake Pedal Limit Switch 12-35
Horn 12-36
Horn switch 12-36
Battery 12-37
Ground cables 12-41

SECTION 13 – FE350 ENGINE

General Information 13-1
Before Servicing 13-1
Engine Rotation 13-1
Spark Plug 13-1
Cylinder Head 13-3
General Information 13-3
Breather Valve (Reed Valve) 13-3
Valve Clearance Check and Adjustment 13-3
Crankcase 13-4
Engine Removal 13-4
Crankcase Cover Removal 13-4
Oil Level Sensor 13-6
Crankcase Cover Installation 13-6
Ignition Coil and Flywheel 13-7
Flywheel Installation 13-9
Engine Installation 13-9
Torque Specifications 13-11
Adjustments and Settings 13-11

SECTION 14 – FUEL SYSTEM

General Information 14-1
Carburetor 14-1
Main Jet Elevation/Size Chart 14-2
Changing the Main Jet 14-2

Engine Control Linkage 14-5
General Information 14-5
Accelerator Rod 14-6
Governor Cable 14-8
Accelerator Cable 14-9
Closed Throttle or Idle Adjustment 14-10
Engine RPM Adjustment 14-11
General Information 14-12
Choke Cable Removal 14-12
Choke Cable Installation 14-12
Air Box Removal 14-15
Air Box Installation 14-15
Intake Duct Removal 14-15
Intake Duct Installation 14-16
Intake Duct Repair 14-17
Air Filter 14-17
Fuel Filters 14-18
General Information 14-18
Fuel Filter Removal 14-18
Fuel Filter Installation 14-18
Fuel Pump 14-20
General Information 14-20
Fuel Pump Removal 14-20
Fuel Pump Disassembly 14-21
Fuel Pump Cleaning and Inspection 14-21
Fuel Pump Assembly 14-22
Fuel Pump Installation 14-22
Fuel Tank 14-23
General Information 14-23
Fuel Tank Removal 14-23
Fuel Tank Disposal 14-24
Fuel Tank Storage 14-24
Fuel Tank Installation 14-25
Fuel Lines 14-26

SECTION 15 – EXHAUST SYSTEM

Muffler 15-1
Muffler Removal 15-1
Muffler Installation 15-1

SECTION 16 – UNITIZED TRANSAXLE

General Information 16-1
Lubrication 16-2
Axle Shaft 16-3
Axle Shaft and Oil Seal Removal 16-3
Axle Bearing 16-4
Axle Shaft Installation 16-6
Unitized Transaxle Removal 16-7
Unitized Transaxle Installation 16-16
Forward/Reverse Shifter Cable 16-21
Forward/Reverse Shifter Cable Removal 16-21
Forward/Reverse Shifter Cable Installation 16-21
Forward/Reverse Shifter Cable Adjustment 16-23

SECTION 17 – TORQUE CONVERTER

General Information 17-1
Troubleshooting 17-1
Drive Belt 17-2
Drive Belt Removal 17-3
Drive Belt Installation 17-3
Drive Clutch Removal 17-4
Drive Clutch Cleaning and Inspection 17-5
Drive Clutch Disassembly 17-7
Inspection of Drive Clutch Parts 17-9
Drive Clutch Assembly 17-10
Drive Clutch Installation 17-12
Driven Clutch 17-12
Driven Clutch Removal 17-12
Driven Clutch Disassembly 17-12
Driven Clutch Inspection 17-13
Driven Clutch Assembly 17-13
Driven Clutch Installation 17-16

SECTION i – INDEX

SECTION 10 – PERIODIC MAINTENANCE

GENERAL WARNING

The following safety statements must be heeded whenever the vehicle is being operated, repaired, or serviced. Service technicians should become familiar with these general safety statements, which can be found throughout this manual. Also, other specific safety statements appear throughout this manual and on the vehicle.

⚠ DANGER

- **Battery – Explosive gases! Do not smoke. Keep sparks and flames away from the vehicle and service area. Ventilate when charging or operating vehicle in an enclosed area. Wear a full face shield and rubber gloves when working on or near batteries.**
- **Battery – Poison! Contains acid! Causes severe burns. Avoid contact with skin, eyes, or clothing. Antidotes:**
  - **External: Flush with water. Call a physician immediately.**
  - **Internal: Drink large quantities of milk or water. Follow with milk of magnesia or vegetable oil. Call a physician immediately.**
  - **Eyes: Flush with water for 15 minutes. Call a physician immediately.**
- **Gasoline – Flammable! Explosive! Do not smoke. Keep sparks and flames away from the vehicle and service area. Service only in a well-ventilated area.**
- **Do not operate gasoline vehicle in an enclosed area without proper ventilation. The engine produces carbon monoxide, which is an odorless, deadly poison.**

⚠ WARNING

- **Follow the procedures exactly as stated in this manual, and heed all DANGER, WARNING, and CAUTION statements in this manual as well as those on the vehicle.**
- **Only trained technicians should service or repair the vehicle. Anyone doing even simple repairs or service should have knowledge and experience in electrical and mechanical repair. The appropriate instructions must be used when performing maintenance, service, or accessory installation.**
- **Prior to servicing the vehicle or leaving the vehicle unattended, turn the key switch OFF, remove the key, and place the Forward/Reverse handle in the NEUTRAL position. Chock the wheels when servicing the vehicle.**
- **To avoid unintentionally starting the vehicle:**
  - **Disconnect battery cables, negative (–) cable first (Figure 10-1, Page 10-3).**
  - **Disconnect the spark plug wire from the spark plug.**
- **Frame ground – Do not allow tools or other metal objects to contact frame when disconnecting battery cables or other electrical wiring. Do not allow a positive wire to touch the vehicle frame, engine, or any other metal component.**
- **Wear safety glasses or approved eye protection when servicing the vehicle. Wear a full face shield and rubber gloves when working on or near batteries.**
- **Do not wear loose clothing or jewelry such as rings, watches, chains, etc., when servicing the vehicle.**

WARNING CONTINUED ON NEXT PAGE...

⚠ WARNING

- **Moving parts! Do not attempt to service the vehicle while it is running.**
- **Hot! Do not attempt to service hot engine or exhaust system. Failure to heed this warning could result in severe burns.**
- **Use insulated tools when working near batteries or electrical connections. Use extreme caution to avoid shorting of components or wiring.**
- **Check the vehicle owner's manual for proper location of all vehicle safety and operation decals and make sure they are in place and are easy to read.**
- **Any modification or change to the vehicle that affects the stability or handling of the vehicle, or increases maximum vehicle speed beyond factory specifications, could result in severe personal injury or death.**
- **Lift only one end of the vehicle at a time. Use a suitable lifting device (chain hoist or hydraulic floor jack) with 1000 lb. (454 kg) minimum lifting capacity. Do not use lifting device to hold vehicle in raised position. Use approved jack stands of proper weight capacity to support the vehicle and chock the wheels that remain on the floor. When not performing a test or service procedure that requires movement of the wheels, lock the brakes.**
- **If wires are removed or replaced, make sure wiring and wire harness are properly routed and secured. Failure to properly route and secure wiring could result in vehicle malfunction, property damage, personal injury, or death.**
- **For vehicles with cargo beds, remove all cargo before raising the bed or servicing the vehicle. If the vehicle is equipped with a prop rod, ensure that it is securely engaged while bed is raised. Do not close bed until all persons are clear of cargo bed area. Keep hands clear of all crush areas. Do not drop cargo bed; lower gently and keep entire body clear. Failure to heed this warning could result in severe personal injury or death.**
- **Improper use of the vehicle or failure to properly maintain it could result in decreased vehicle performance, severe personal injury, or death.**
- **Do not leave children unattended on vehicle.**

GENERAL INFORMATION

See General Warning on page 10-1.

To ensure trouble-free vehicle performance, it is very important to follow an established preventive maintenance program (regularly scheduled service). Regular and consistent vehicle maintenance can prevent vehicle down-time and expensive repairs that result from neglect. Any vehicle not functioning correctly should be removed from use until it is properly repaired. This will prevent further damage to the vehicle and avoid the possibility of injury due to unsafe conditions.

Contact your local authorized Club Car distributor/dealer to perform all repairs and semiannual and annual periodic service.

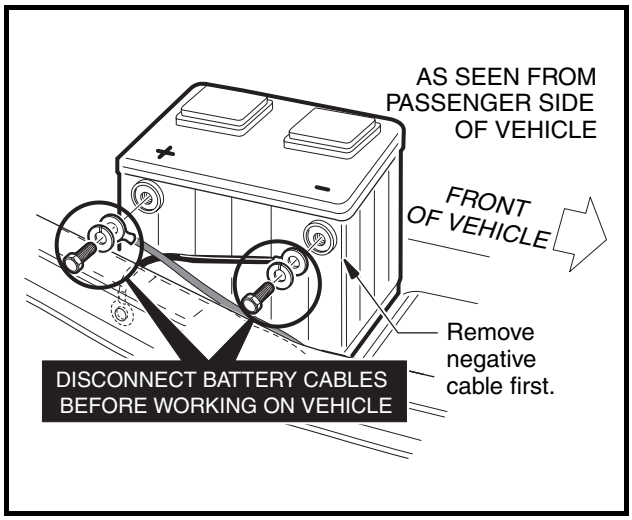

Figure 10-1 Battery Cable Removal

PERIODIC SERVICE SCHEDULE

See General Warning on page 10-1.

⚠ WARNING

- **Service, repairs, and adjustments must be made per instructions in the maintenance and service manual and this supplement.**

NOTE: *If the vehicle is constantly subjected to heavy use or severe operating conditions, the preventive maintenance procedures should be performed more often than recommended in the periodic service and lubrication schedules.*

Both the Periodic Service Schedule and the Periodic Lubrication Schedule must be followed to keep the vehicle in optimum operating condition.

PERIODIC SERVICE SCHEDULE

REGULAR INTERVAL	SERVICE	
Monthly service by owner or trained technician	Engine	Check engine oil level; change if necessary. **See Periodic Lubrication Schedule on page 10-5.**
		Check engine cooling air intake; visually inspect unshrouded area around engine exhaust for grass and debris, and clean if necessary.
	Tires	Check air pressure and adjust if necessary. **See Section 2 – Specifications in the appropriate maintenance and service manual.**
	General vehicle	Wash engine compartment and underside of vehicle. Do not wash engine when hot.
Semiannual service by trained technician only (every 50 hours of operation)	Battery	Clean terminals and wash dirt from casing; check electrolyte level. **See Battery, Section 12, Page 12-37.**
	Front wheel alignment and camber	Check and adjust if necessary. **See Section 7 – Steering and Front Suspension in the appropriate maintenance and service manual.**
	Electrical wiring and connections	Check for tightness and damage.
	Brake system	Check brake shoes; replace if necessary. **See Section 6 – Wheel Brake Assemblies in the appropriate maintenance and service manual.**
		Lubricate brake slides per lubrication schedule. **See Section 6 – Wheel Brake Assemblies in the appropriate maintenance and service manual.**
		Check brake cables for damage; replace if necessary.
Annual service by trained technician only (every 100 hours of operation)	Engine	Check for leaks around gaskets, fill plugs, etc.
		Inspect, clean and gap spark plug; replace if necessary.
	Engine air intake system	Check air filter element; clean or replace if necessary. Dispose of used filter element properly.
		Check clamps for tightness; check hose for cracks.
	General vehicle	Check for loose hardware and tighten if necessary.
Two year service by trained technician only (every 200 hours of operation)	Fuel filters	Replace. Dispose of used filters properly.

⚠ WARNING

- **If any problems are found during scheduled inspection or service, do not operate the vehicle until repairs are made. Failure to make necessary repairs could result in fire, property damage, severe personal injury, or death.**

PERIODIC LUBRICATION SCHEDULE

See General Warning on page 10-1.

PERIODIC LUBRICATION SCHEDULE			
REGULAR INTERVAL	**SERVICE**	**LUBRICATION POINT**	**RECOMMENDED LUBRICANT**
Semiannually by owner or trained technician (every 50 hours of operation).	Brake pedal shaft bearings	1	Dry Moly Lube – CCI P/N 1012151
	Brake linkage and pivots	2	Dry Moly Lube – CCI P/N 1012151
	Accelerator push rod pivots, mounts, and shifter cable pivots	3	Dry Moly Lube – CCI P/N 1012151
	Front suspension (5 fittings)	4	Chassis Lube – EP NLGI Grade 2
	Brake slides	5	Dry Moly Lube – CCI P/N 1012151
Annually by trained technician only (every 100 hours of operation).	Check/fill unitized transaxle to plug level	6	27 oz. (0.8 liter) 80-90 WT. API class GL-3 or 80-90 WT. AGMA class EP Gear Lube
	Inspect front wheel bearings. Repack as necessary.	7	Chassis Lube – EP NLGI Grade 2
First change 100 hours. Additional changes every 200 hours of operation or annually, whichever comes first.	Change engine oil and oil filter	8	32 oz. (0.97 liter) without filter; 38 oz. (1.16 liters) with filter. 10W30 above 32 °F (0 °C) or SAE 5W20 below 32 °F (0 °C) API class SE, SF, or SG Oil (or higher)

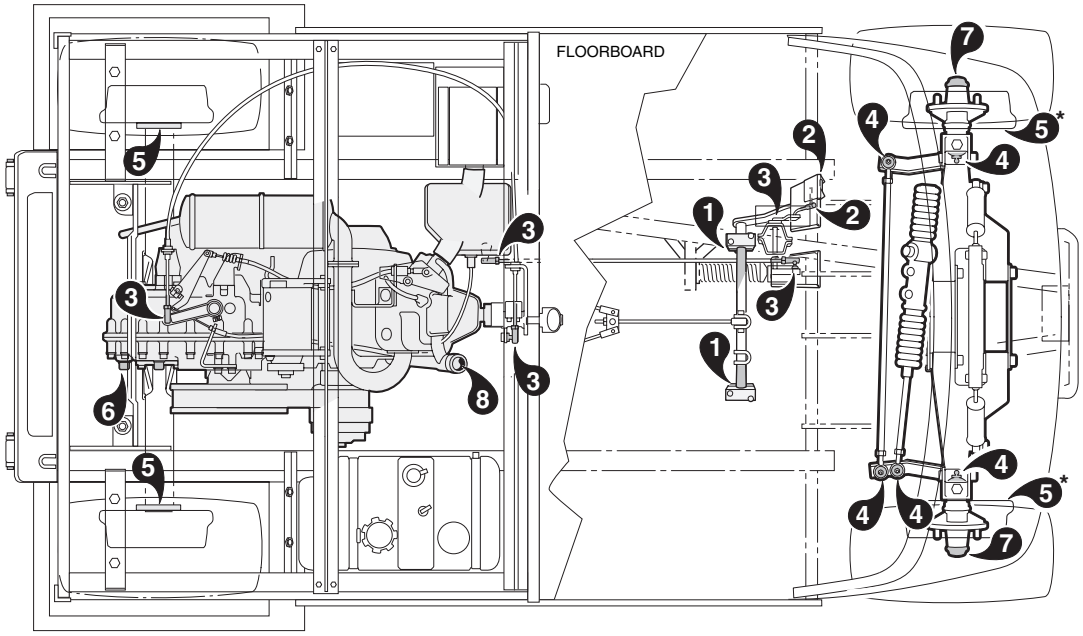

***If equipped with front wheel brakes.**

Figure 10-2 Lubrication Points

ENGINE OIL

See General Warning on page 10-1.

Even though the low oil warning light on the dash should illuminate if the engine oil level is low, the engine oil level should be checked monthly. The vehicle should be on a level surface when checking oil.

ENGINE OIL LEVEL CHECK

1. Remove the oil level dipstick from the oil filler tube and wipe oil from the stick **(Figure 10-3, Page 10-6)**. **See following CAUTION.**

⚠ CAUTION

- **Do not remove dipstick while engine is running.**

2. Check oil level by fully inserting the dipstick into the oil filler tube and immediately removing it again.
3. If the oil level is at or below the low level mark on the dipstick gauge, add oil until the level is between low and full level (safe level).

NOTE: *Properly recycle or dispose of used oil in accordance with local, state, and federal regulations.*

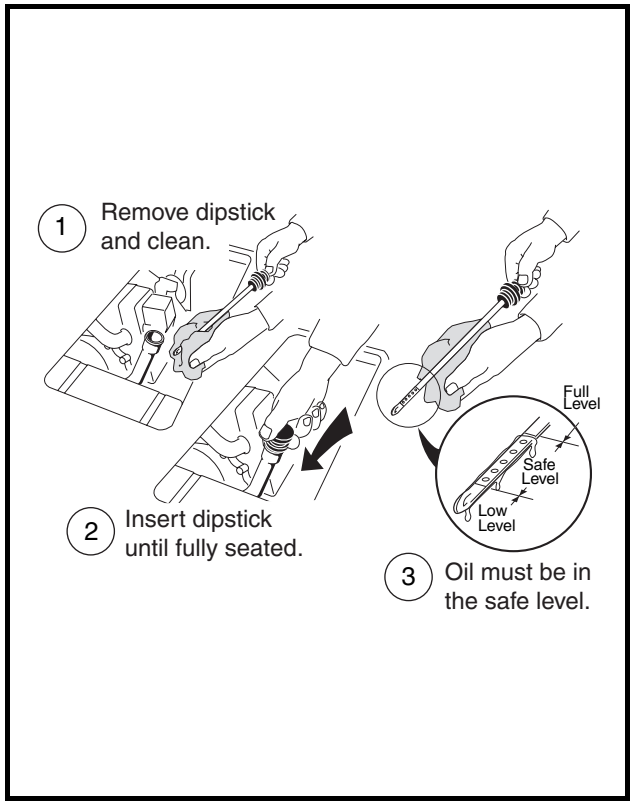

Figure 10-3 Engine Oil Level Check

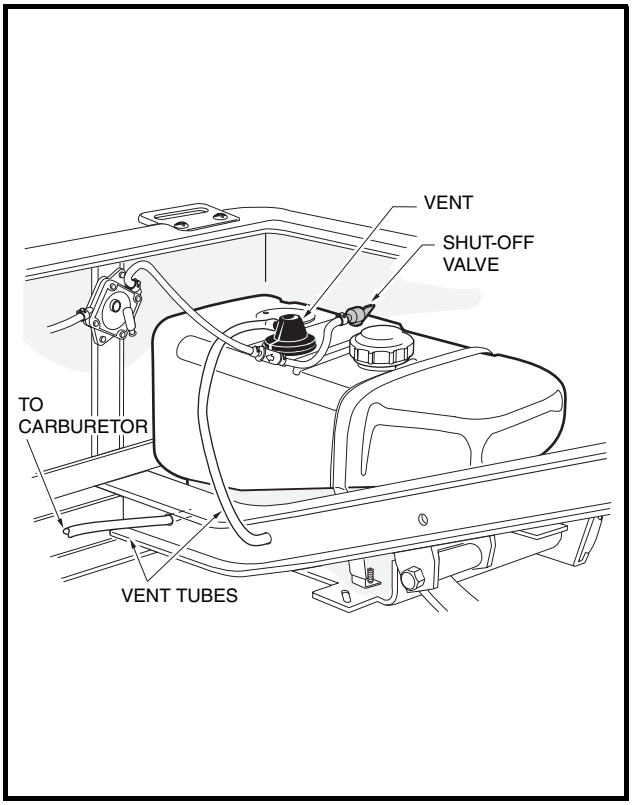

Figure 10-4 Fuel Tank

OIL VISCOSITY

Choose the viscosity according to the temperature as indicated by the oil viscosity chart **(Figure 10-5, Page 10-7)**. **See following NOTE.**

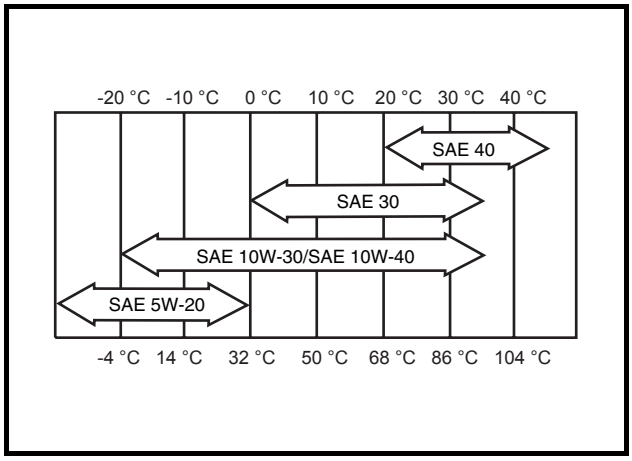

Figure 10-5 Oil Viscosity Chart

NOTE: *Using multi-grade oils (5W-20, 10W-30, and 10W-40) will increase oil consumption. Check oil level more frequently when using multi-grade oils.*

FUELING INSTRUCTIONS

See General Warning on page 10-1.

⚠ DANGER

- **Turn key switch to the OFF position before fueling.**
- **Do not pour fuel into the fuel tank when the engine is hot or while it is running.**
- **To avoid electric arc caused by static electricity, the fuel storage/pumping device must be grounded. If the pump is not grounded, the vehicle must be grounded to the pump before and during the fueling operation.**
- **If the vehicle has an all-weather enclosure installed, the fuel tank must be properly vented as shown (Figure 10-4, Page 10-6).**
- **To avoid the possibility of fire, clean up any spilled fuel before operating the vehicle.**

⚠ CAUTION

- **To allow for expansion, do not fill higher than one inch (2.54 cm) from the top of the fuel tank. Avoid spilling fuel.**

NOTE: *Whenever possible, avoid using oxygenated fuels and fuels that are blended with alcohol. Vehicles to be stored for extended periods should be prepared for storage as instructed.* ***See Preparing the Vehicle for Extended Storage in Section 3 of the appropriate maintenance and service manual.***

Fueling Instructions, Continued:

For Turf 2, Carryall 2, and Carryall 2 Plus vehicles:

1. Lift and remove seat bottom.
2. The fuel tank is located on the passenger side of the vehicle **(Figure 10-4, Page 10-6)**. Remove fuel cap and fill the fuel tank with fresh, unleaded fuel only. **See preceding CAUTION and NOTE.**
3. Replace fuel cap on tank. Make sure cap is tightened securely.
4. Replace seat bottom.

For Turf 6 and Carryall 6 vehicles:

1. Unlatch access door in the cargo bed of the vehicle and open completely before refueling.
2. The fuel tank is located on the passenger side of the vehicle **(Figure 10-4, Page 10-6)**. Remove fuel cap and fill the fuel tank with fresh, unleaded fuel only. **See preceding CAUTION and NOTE.**
3. Replace fuel cap on tank. Make sure cap is tightened securely.
4. Close the access door and secure the latches.

For TransPorter and Villager vehicles:

1. Lift and remove the second forward-facing seat.
2. The fuel tank is located on the passenger side of the vehicle **(Figure 10-4, Page 10-6)**. Remove fuel cap and fill the fuel tank with fresh, unleaded fuel only. **See preceding CAUTION and NOTE.**
3. Replace fuel cap on tank. Make sure cap is tightened securely.
4. Replace seat bottom.

BATTERY

For periodic battery maintenance, see Battery, Section 12, Page 12-37.

SECTION 11 – TROUBLESHOOTING AND ELECTRICAL SYSTEM

⚠ DANGER

- **See General Warning, Section 10, Page 10-1.**

⚠ WARNING

- **See General Warning, Section 10, Page 10-1.**

GENERAL INFORMATION

This section contains the information required to correctly troubleshoot the vehicle. A troubleshooting guide is provided for general troubleshooting.

In addition to troubleshooting, this section contains general information on the electrical system and the circuits of the electrical system.

TROUBLESHOOTING GUIDE

The following troubleshooting guide will be helpful in identifying operating difficulties should they occur. The guide includes the symptom, probable cause(s) and suggested checks. The procedures used in making these checks can be found in the referenced sections in this supplement or the appropriate maintenance and service manual.

TROUBLESHOOTING GUIDE

SYMPTOM	POSSIBLE CAUSES	CORRECTIVE ACTION
Engine does not start easily.	Spark plug is partially fouled or in poor condition	Section 13 – FE350 Engine
	Spark plug wire is damaged or loose	Section 13 – FE350 Engine
	Loose wire connection at ignition coil or RPM limiter	Section 11 – Troubleshooting and Electrical System Test Procedures 14, 15, and 16
	Intermittent ignition coil failure	Section 11 – Troubleshooting and Electrical System Test Procedures 14, 15, and 16
	Low cylinder compression	Section 13 – FE350 Engine
	Water or dirt in the fuel system and/or carburetor; dirty or clogged fuel filter	Section 14 – Fuel System
	Carburetor improperly adjusted	Section 14 – Fuel System
	Starter/generator belt is slipping	Belt Tension Adjustment, Section 12, Page 12-11

Troubleshooting Guide continued on next page...

TROUBLESHOOTING GUIDE

SYMPTOM	POSSIBLE CAUSES	CORRECTIVE ACTION
Engine starts but does not run smoothly.	Spark plug is fouled or in poor condition	Section 13 – FE350 Engine
	Spark plug wire is damaged or loose	Section 13 – FE350 Engine
	Intermittent ignition coil failure	Section 11 – Troubleshooting and Electrical System Test Procedures 12, 13, and 14
	Water or dirt in the fuel system and/or carburetor; dirty or clogged fuel filter	Section 14 – Fuel System
	Fuel pump malfunction; fuel pressure to carburetor too low	Section 14 – Fuel System
Engine turns but fails to start.	Fuel tank is empty	Section 14 – Fuel System
	Fuel line or filters clogged	Section 14 – Fuel System
	Fouled spark plug	Section 13 – FE350 Engine
	Spark plug wire damaged or loose	Section 13 – FE350 Engine
	Loose wire connection at ignition coil or RPM limiter	Section 11 – Troubleshooting and Electrical System Test Procedures 14, 15, and 16
	Ignition coil or RPM limiter failed	Section 11 – Troubleshooting and Electrical System Test Procedures 14, 15, and 16
	Engine flooded with fuel as result of excess choking	Vehicle Owner's Manual, Controls and Indicators. See Choke.
	Kill circuit grounded	Section 11 – Troubleshooting and Electrical System Test Procedures 14, 15, and 16
	Fuel pump malfunction or failure	Section 14 – Fuel System
	Relay failure (key-start vehicle only)	Section 11 – Troubleshooting and Electrical System
Engine overheats.	Fan screen is partially blocked or plugged	Section 13 – FE350 Engine
	Governor is improperly adjusted	Section 14 – Fuel System
	Carburetor is too lean; check main jet size	Section 14 – Fuel System
Engine pre-ignites.	Excessive carbon deposits on piston head or in combustion chamber	Section 13 – FE350 Engine
	Spark plug heat range is incorrect	Section 13 – FE350 Engine
	Unsuitable or contaminated fuel	Section 14 – Fuel System
Loss of engine power.	Exhaust valve is restricted with carbon deposit	Section 13 – FE350 Engine
	Muffler or exhaust pipe restricted with carbon or other substance	Section 15 – Exhaust System
	Ignition coil failed	Section 11 – Troubleshooting and Electrical System Test Procedures 14, 15, and 16
	Air filter is dirty or clogged	Section 14 – Fuel System
	Governor is improperly adjusted	Section 14 – Fuel System

Troubleshooting Guide continued on next page...

TROUBLESHOOTING GUIDE

SYMPTOM	POSSIBLE CAUSES	CORRECTIVE ACTION
Loss of engine power, continued	Throttle linkage out of adjustment	Section 14 – Fuel System
	Low cylinder compression	Section 13 – FE350 Engine
	Spark plug failed	Section 13 – FE350 Engine
	Restricted fuel flow	Section 14 – Fuel System
	Torque converter is not backshifting properly	Section 17 – Torque Converter
Spark plug fouls repeatedly.	Incorrect plug	Section 13 – FE350 Engine
	Spark plug wire is damaged	Section 13 – FE350 Engine
	Unsuitable fuel, or incorrect (rich) fuel mixture	Section 14 – Fuel System
	Ignition coil failed	Section 11 – Troubleshooting and Electrical System Test Procedures 14, 15, and 16
	Dirt entering combustion chamber	Check intake system for leaks. Section 14 – Fuel System
	Rings are heavily worn, low cylinder pressure	Section 13 – FE350 Engine
Carburetor floods.	Inlet valve or seat is leaking, dirty, worn, or damaged	Section 14 – Fuel System
	Float is damaged and filled with fuel	Section 14 – Fuel System
	Float needle valve not functioning properly	Section 14 – Fuel System
	Carburetor vent is clogged	Section 14 – Fuel System
Starter fails to operate.	Neutral lockout cam is in the wrong position	Test Procedure 30 – Relay (Starter and Neutral Lockout Circuits) on page 11-41.
	Fuse is blown	Test Procedure 2 – Fuse on page 11-17.
	Battery is dead	Test Procedure 1 – Battery on page 11-15.
	Starter control circuit is not operating	Test Procedure 4 – Key Switch (Starter Circuit) on page 11-19.
	Starter/generator failed	Test Procedure 9 – Starter/Generator (Starter Function) on page 11-23.
	Starter solenoid failed	Test Procedure 7 – Solenoid on page 11-21.
	Accelerator pedal limit switch failed	Test Procedure 6 – Accelerator Pedal Limit Switch on page 11-20.
	Key switch failed	Test Procedure 4 – Key Switch (Starter Circuit) on page 11-19.
	Neutral lockout limit switch failed	Test Procedure 8 – Neutral Lockout Limit Switch on page 11-22.
	Loose or broken wire in starter/generator circuit	Starter/Generator on page 12-1
	Cylinder and/or crankcase flooded with fuel	Section 14 – Fuel System
	Relay failure (key-start vehicle only)	Section 12 – Electrical Components

Troubleshooting Guide continued on next page...

TROUBLESHOOTING GUIDE

SYMPTOM	POSSIBLE CAUSES	CORRECTIVE ACTION
Starter/generator does not charge battery.	Loose or broken wire in starter/generator circuit	Test Procedure 11 – Starter/Generator (Generator Function) on page 11-25.
	Generator field coil is shorted	Test Procedure 11 – Starter/Generator (Generator Function) on page 11-25.
	Brushes are worn or commutator is dirty	Starter/Generator, Section 12, Page 12-1
	Starter/generator belt is loose or slipping	Belt Tension Adjustment, Section 12, Page 12-11
	Voltage regulator failed	Test Procedure 12 – Voltage Regulator on page 11-25.
	Battery failed	Test Procedure 1 – Battery on page 11-15.
Transmission does not engage or disengage smoothly.	Transmission shifter linkage is binding or is out of adjustment	Section 16 – Unitized Transaxle
	Idle RPM setting is set too high	Section 14 – Fuel System
	Insufficient (low) level of lubricant or wrong type of lubricant in transmission	Section 16 – Unitized Transaxle
	Internal gears are damaged or worn	Section 16 – Unitized Transaxle
	Synchronizer rings are worn, damaged or jammed	Section 16 – Unitized Transaxle
Excessive vehicle vibration.	Engine mounting nuts or bolts are loose	Section 13 – FE350 Engine
	Snubber on frame is worn or damaged	Section 13 – FE350 Engine
	Misaligned muffler mounting clamp	Section 15 – Exhaust System
	Damaged drive belt or starter belt	Section 17 – Torque Converter
	Damaged drive clutch	Section 17 – Torque Converter
	Damaged driven clutch	Section 17 – Torque Converter
	Damaged starter/generator pulley	Starter/Generator on page 12-1.
	RPM setting is incorrect	Engine RPM Adjustment, Section 14, Page 14-11
Torque converter does not shift smoothly.	Drive belt is worn, cracked, glazed, or frayed	Section 17 – Torque Converter
	Drive clutch malfunction	Section 17 – Torque Converter
	Driven clutch malfunction	Section 17 – Torque Converter
	Governor is sticking	Section 16 – Unitized Transaxle

Troubleshooting Guide continued on next page...

TROUBLESHOOTING GUIDE

SYMPTOM	POSSIBLE CAUSES	CORRECTIVE ACTION
Engine won't stop running.	Kill circuit wire is disconnected from the ignition coil	Test Procedure 13 – Disconnected Kill Wire on page 11-26.
	Relay failure (key-start vehicle only)	Section 11 – Troubleshooting and Electrical System Test Procedures 4 and 18
	Accelerator pedal linkage out of adjustment, causing engine kill limit switch not to activate	Section 14 – Fuel System
	Key switch failure	Test Procedure 18 – Key Switch (Engine Kill Circuit) on page 11-34.
	Carburetor is too lean; check main and pilot jet sizes	Section 14 – Fuel System
	Carburetor throttle stop screw out of adjustment	Section 14 – Fuel System

WIRING DIAGRAMS

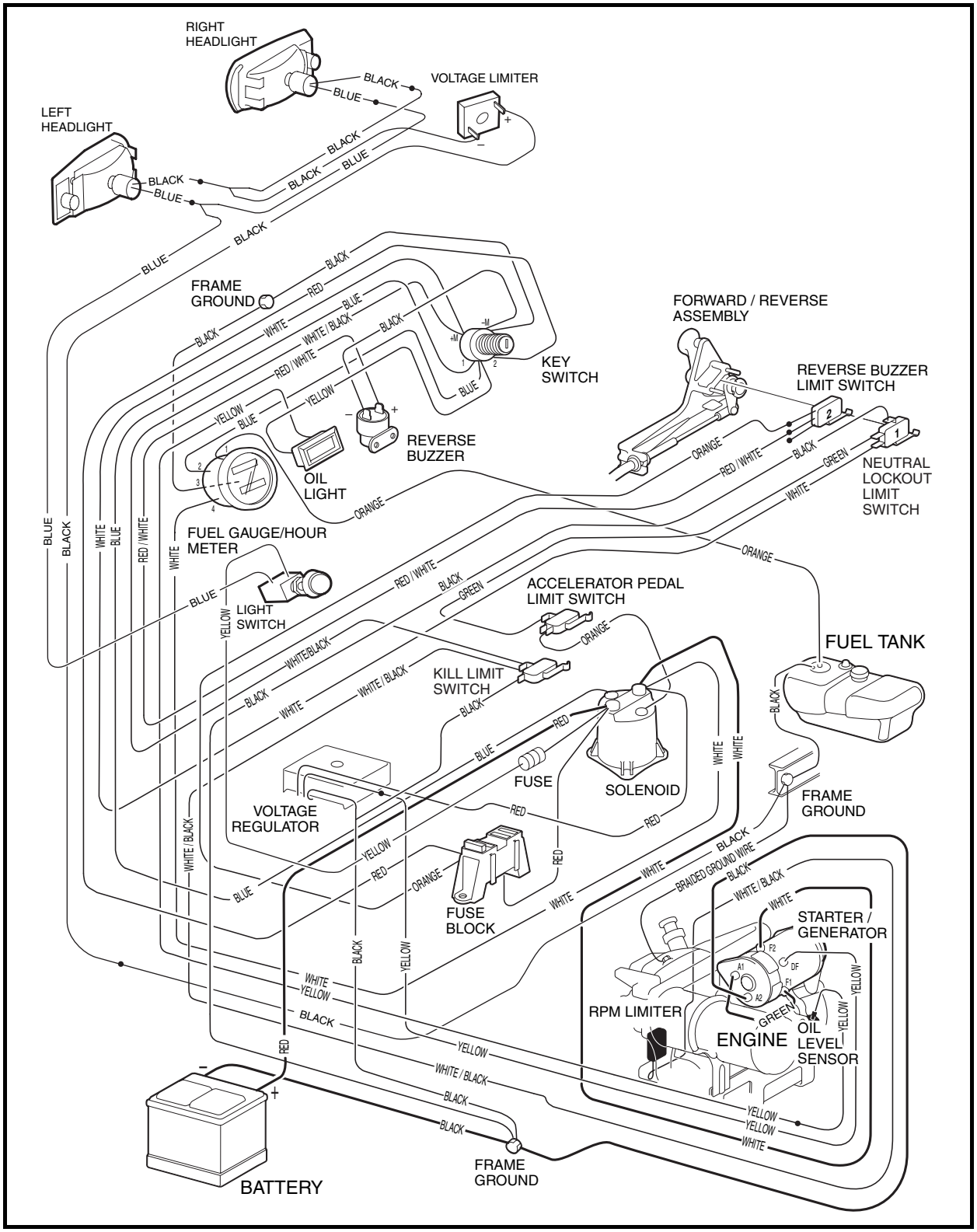

Figure 11-1 Wiring Diagram for Turf 2

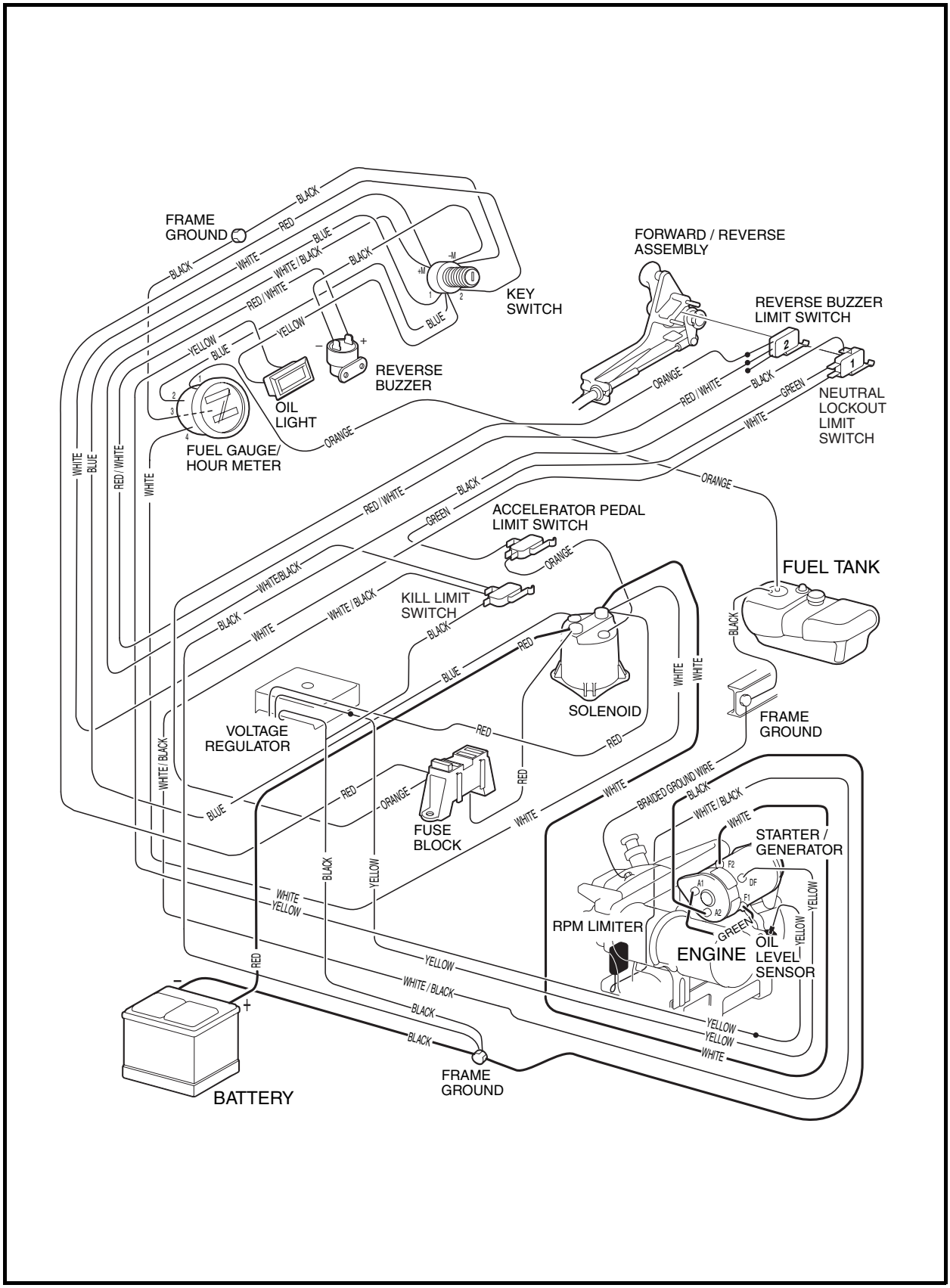

Figure 11-2 Wiring Diagram for Carryall 2

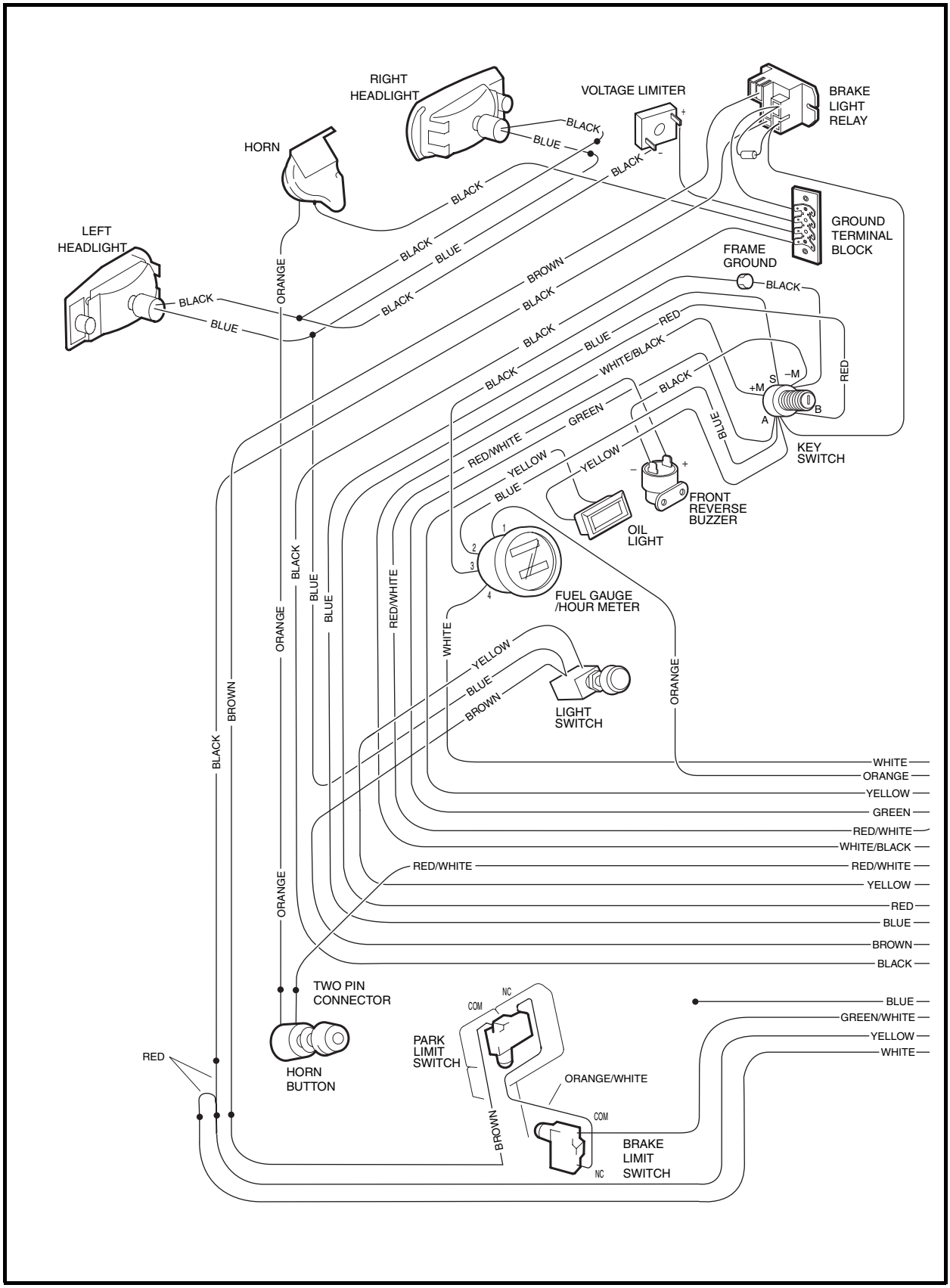

Figure 11-3 Wiring Diagram for Carryall 6, Villager, and TransPorter Vehicles (Front)

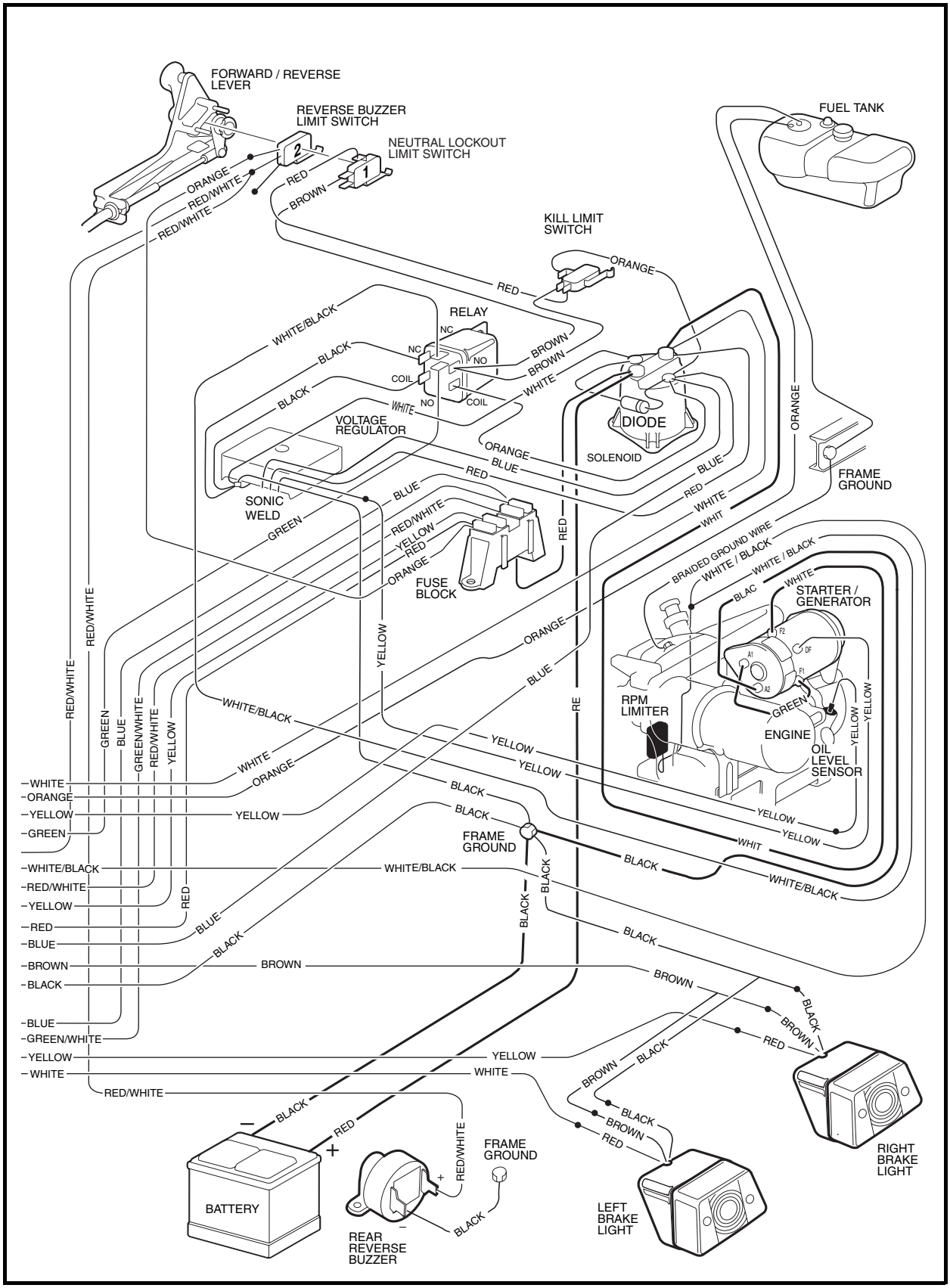

Figure 11-4 Wiring Diagram for Carryall 6, Villager, and TransPorter Vehicles (Rear)

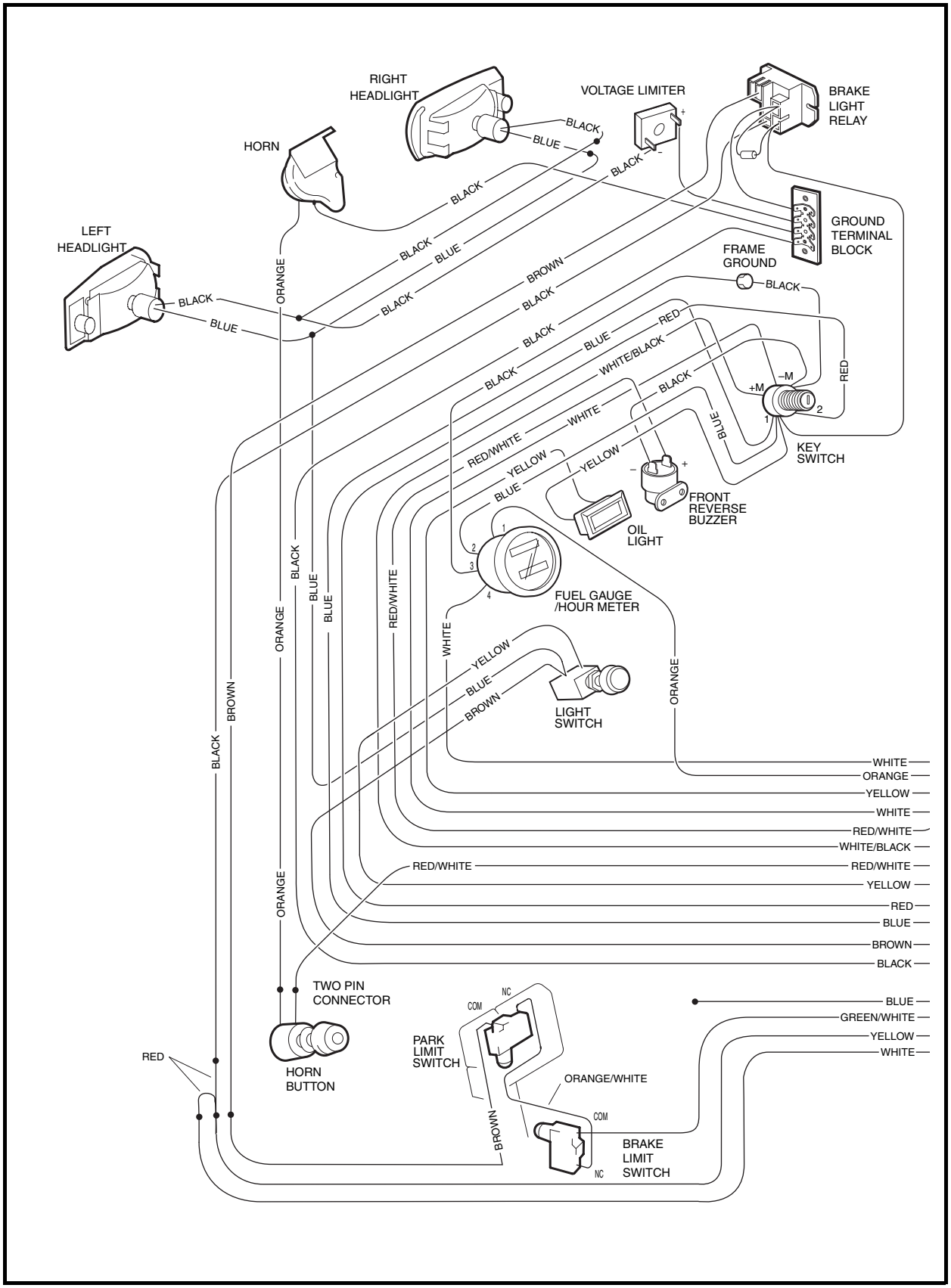

Figure 11-5 Wiring Diagram for Turf 6 Vehicle (Front)

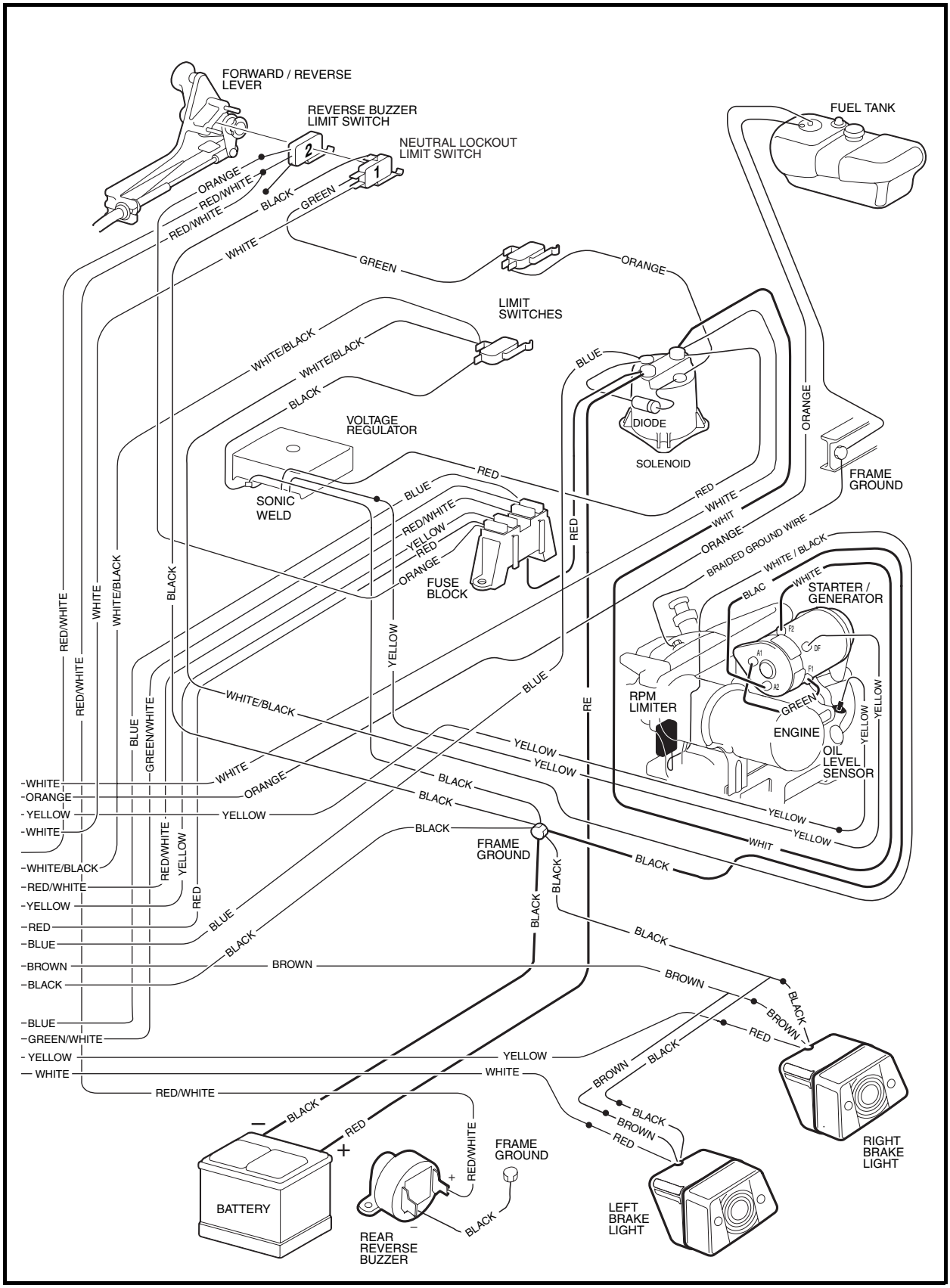

Figure 11-6 Wiring Diagram for Turf 6 Vehicle (Rear)

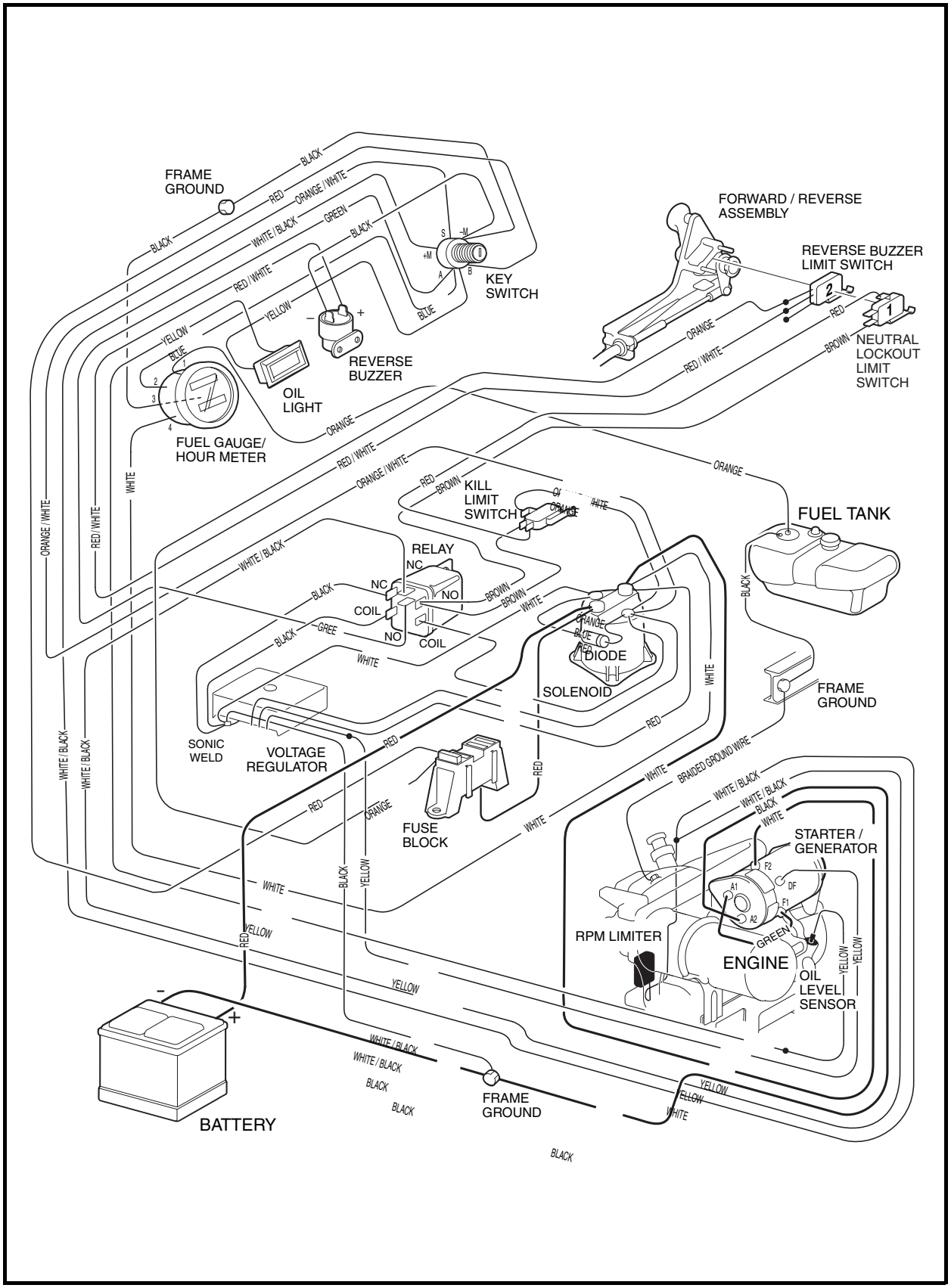

Figure 11-7 Wiring Diagram for Carryall 2 Plus Vehicle

ELECTRICAL SYSTEM

The electrical system on the gasoline vehicle is 12 volts DC with negative (–) ground to frame, and consists of twelve circuits that are easily identified:

- Starter Circuit
- Generator Circuit
- Engine Ignition Circuit
- Engine Kill Circuit
- Reverse Buzzer Circuit
- Low Oil Warning Light Circuit
- Neutral Lockout Circuit
- Fuel Gauge and Sending Unit Circuit
- Hour Meter Circuit
- Lighting Circuit (Turf 2 and 6, Carryall 6, TransPorter, and Villager vehicles)
- Brake Light Circuit (Turf 6, Carryall 6, TransPorter, and Villager vehicles)
- Horn Circuit (Turf 6, Carryall 6, TransPorter, and Villager vehicles)

Recognizing and understanding the function of each of these circuits will help to quickly isolate the source of an electrical problem. Use the appropriate test procedure to correct the electrical problem. **See Test Procedures on page 11-13.**

For a complete wiring diagram, see pages 11-8 through 11-9 for Carryall 6, Villager and TransPorter vehicles; pages 11-10 through 11-11 for Turf 6; page 11-6 for Turf 2; page 11-7 for the Carryall 2; and page 11-12 for the Carryall 2 Plus.

TEST PROCEDURES

INDEX OF TEST PROCEDURES

1. Battery
2. Fuse
3. Ground Cables
4. Key Switch (Starter Circuit)
5. Key Switch For Key-Start Vehicles Only (Accessory Terminal)
6. Accelerator Pedal Limit Switch
7. Solenoid
8. Neutral Lockout Limit Switch
9. Starter/Generator (Starter Function)
10. Wire Continuity

Index of Test Procedures, Continued:

11. Starter/Generator (Generator Function)

12. Voltage Regulator

13. Disconnected Kill Wire

14. Ignition Spark

15. RPM Limiter

16. Ignition Coil

17. Kill Limit Switch

18. Key Switch (Engine Kill Circuit)

19. Engine Kill Wire

20. Reverse Buzzer Limit Switch

21. Reverse Buzzer

22. Low Oil Warning Light

23. Oil Level Sensor

24. Neutral Lockout Cam

25. Battery Test (Under Load)

26. Fuel Level Sending Unit

27. Fuel Gauge

28. Hour Meter

29. Relay (Engine Kill Circuit)

30. Relay (Starter and Neutral Lockout Circuits)

31. Battery Voltage Supply

32. Headlight Switch

33. Brake Light Relay

34. Voltage Limiter (Vehicles with Headlights)

35. Voltage At Taillight Socket

36. Taillight Bulb Socket

37. Voltage at Headlight Socket

38. Park Brake Limit Switch

39. Brake Pedal Limit Switch

40. Voltage at Horn

41. Horn switch

TEST PROCEDURE 1 – BATTERY

See General Warning, Section 10, Page 10-1.

⚠ DANGER

- **Due to the danger of an exploding battery, wear a full face shield and rubber gloves when working near a battery.**
- **Battery – Explosive gases! Do not smoke. Keep sparks and flames away from the vehicle and service area. Ventilate when charging or operating vehicle in an enclosed area. Wear a full face shield and rubber gloves when working on or near batteries.**
- **Battery – Poison! Contains acid! Causes severe burns. Avoid contact with skin, eyes, or clothing. Antidotes:**
  - **External: Flush with water. Call a physician immediately.**
  - **Internal: Drink large quantities of milk or water. Follow with milk of magnesia or vegetable oil. Call a physician immediately.**
  - **Eyes: Flush with water for 15 minutes. Call a physician immediately.**

NOTE: *The battery must be properly maintained and fully charged in order to perform the following test procedures. Battery maintenance procedures, including watering information and allowable mineral content, can be found in section 12 of this manual.* ***See Battery, Section 12, Page 12-37.***

1. Place the neutral lockout cam in the SERVICE (MAINTENANCE) position, put the Forward/Reverse handle in the NEUTRAL position, and chock the wheels.
2. Check for loose or corroded battery terminal connections. Remove the negative (–) cable first and clean, tighten, and replace connections as necessary.

Hydrometer Test

A hydrometer (CCI P/N 1011478) measures the specific gravity. The greater the specific gravity, the greater the state of charge of the battery. A fully charged battery should read between 1.250 and 1.280 at 80 °F (27 °C). Never add acid to the battery to obtain a higher specific gravity **(Figure 11-8, Page 11-16)**.

⚠ CAUTION

- **Do not allow battery acid from battery caps or hydrometer to drip onto the body. Battery acid will cause permanent damage. Wash off immediately.**

Performing the Hydrometer Test

1. Be sure that the battery has sufficient water to cover the plates by approximately 1/2 inch (12.7 mm) and is fully charged prior to beginning the test. If water must be added, recharge the battery before performing the hydrometer test **(Figure 11-9, Page 11-16)**.
2. Remove the vent cap.
3. Using a battery thermometer (CCI P/N 1011767), record the electrolyte temperature of a center cell.
4. Squeeze the rubber bulb of the hydrometer and insert into the cell. Slowly release the bulb, drawing electrolyte up into the glass tube of the hydrometer.
5. When the float rises off the bottom, adjust the electrolyte level so that the float rides free of the bottom but does not strike the bottom of the rubber bulb. Remove the hydrometer from the cell and release the pressure from the bulb.

Test Procedure 1 – Battery, Continued:

6. Hold the hydrometer vertically, ensuring that the float is not contacting the sides of the glass tube. Hold the hydrometer at eye level and read the scale at the level of electrolyte **(Figure 11-8, Page 11-16)**.
7. Record the reading.
8. Return the electrolyte to the cell from which it was taken. Replace vent cap.
9. Repeat steps 2 through 8 on all cells.

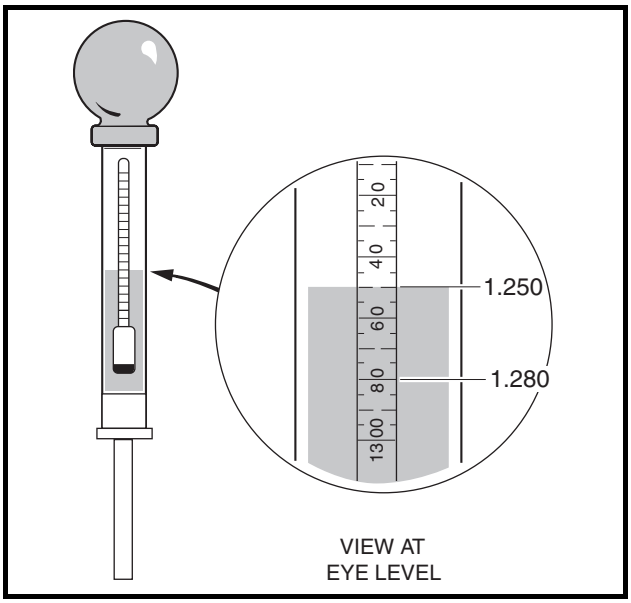

Figure 11-8 Hydrometer Test

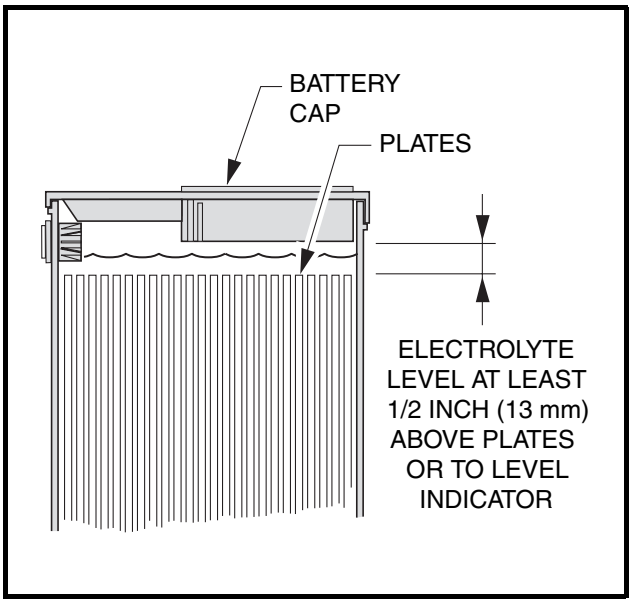

Figure 11-9 Battery Electrolyte Level

Hydrometer Calibration

Most hydrometers are calibrated to read correctly at 80 °F (27 °C). The readings obtained as described above must be corrected for temperature. For each 10 °F (5.6 °C) above 80 °F (27 °C), add 0.004 to the reading. For each 10 °F (5.6 °C) below 80 °F (27 °C), subtract 0.004 from the reading.

Interpreting the Results of the Hydrometer Test

The approximate state of charge can be determined by referring to the following table:

SPECIFIC GRAVITY (TEMPERATURE CORRECTED)	APPROXIMATE STATE OF CHARGE
1.250-1.280	100%
1.220-1.240	75%
1.190-1.210	50%
1.160-1.180	25%

If the difference between the cells is 0.020 or more, the low cell should be suspected. It may require a catch-up charge or it may be a weak cell. When the variations between cells reach 0.050 or more, the battery should be replaced.

Voltage Test

1. Take a voltage reading with a multimeter set to 20 VDC by placing the red (+) probe on the positive (+) battery post and the black (–) probe on the negative (–) battery post. If it shows less than 12.4 volts, or if the lowest specific gravity reading from the Hydrometer Test is less than 1.225, recharge the battery. If battery voltage is greater than 12.4 volts and specific gravity is greater than 1.225, the problem is not with the battery. If the battery does not reach 12.4 volts, or if the specific gravity of a cell is still less than 1.225 after charging, replace the battery. **See following NOTE.**

NOTE: *A fully charged battery that is in good condition should have a specific gravity of at least 1.225 in all cells, and the difference in the specific gravity of any two cells should be less than 50 points. Open circuit voltage should be at least 12.4 volts.*

Load Test

1. Connect a 160-ampere load tester to the battery posts.
2. Turn the switch on the load tester to the ON position.
3. Read the battery voltage after the load tester has been turned ON for 15 seconds. Compare the battery's voltage reading with the following table. Make sure you have the correct ambient temperature.

IF TEMPERATURE IS	MINIMUM CRANKING VOLTAGE
70 °F (20 °C and above)	9.6 V
60 °F (16 °C)	9.5 V
50 °F (10 °C)	9.4 V
40 °F (4 °C)	9.3 V
30 °F (-1 °C)	9.1 V
20 °F (-7 °C)	8.9 V
10 °F (-12 °C)	8.7 V
0 °F (-18 °C)	8.5 V

4. If the battery is found to be good, or if the electrical problem continues after the battery has been replaced with a good one, test the electrical circuits.

TEST PROCEDURE 2 – FUSE

See General Warning, Section 10, Page 10-1.

The fuse (red 10-amp) is located in the electrical component box.

1. Disconnect the battery cables as instructed. **See WARNING "To avoid unintentionally starting..." in General Warning, Section 10, Page 10-1.**
2. Remove the cover from the electrical component box.
3. Ensure that wires are connected correctly and are tight. If they are not, rewire or tighten as necessary.
4. Remove fuse to be tested from the fuse block. **See Fuse Removal, Section 12, Page 12-16.** The red 10-amp fuse protects the solenoid for the starter (cranking) circuit. The 20-amp fuse at the yellow wire connection protects the headlights and brake lights (if equipped). The fuse at the red/white wire connection protects the horn.

Test Procedure 2 – Fuse, Continued:

5. Connect the probes of a multimeter, set to 200 ohms, to the fuse terminals. The reading should be continuity. If there is no continuity, determine and repair the cause of the fuse failure. Replace the fuse with a properly rated new one.

TEST PROCEDURE 3 – GROUND CABLES

See General Warning, Section 10, Page 10-1.

1. Disconnect the battery cables as instructed. **See WARNING "To avoid unintentionally starting..." in General Warning, Section 10, Page 10-1.**
2. Check the starter/generator ground cable.
   2.1. Set the multimeter to 200 ohms. Place the red (+) probe on the (A2) terminal of the starter/generator and place the black (–) probe on the vehicle frame **(Figure 11-10, Page 11-18)**. The reading should be continuity. If the reading is incorrect, clean and tighten cable connections. If the connections are good and the reading is incorrect, repair or replace the cable.
3. Check the engine ground cable.
   3.1. Place the red (+) probe of the multimeter on the ground cable terminal end located on the oil filler bracket on the engine **(Figure 11-11, Page 11-18)**. Place the black (–) probe on the vehicle frame. The reading should be continuity. If the reading is incorrect, clean and tighten cable connections. If the connections are good and the reading is incorrect, repair or replace the cable.

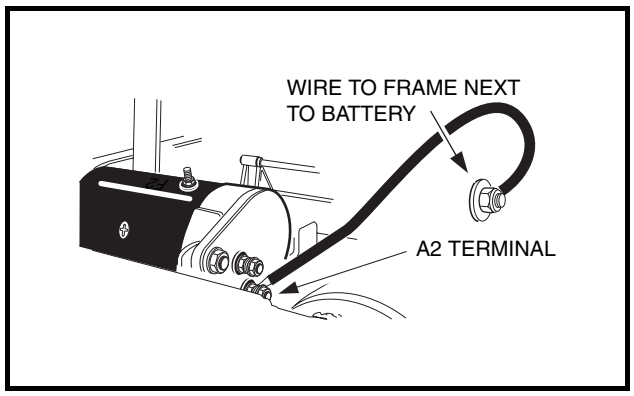

Figure 11-10 Starter/Generator Ground Cable Test

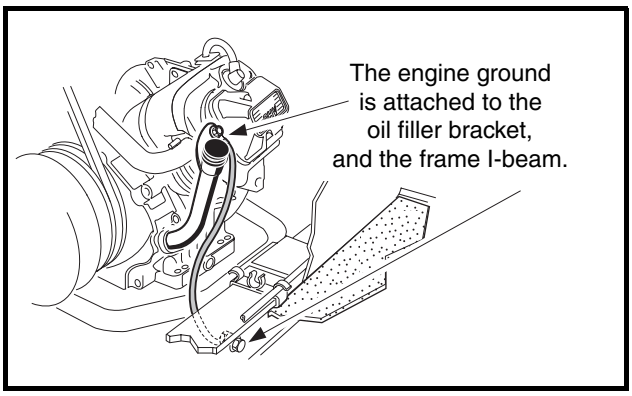

Figure 11-11 Engine Ground Cable Test

4. Check voltage regulator ground connection (at battery frame ground). Make sure it is clean and tight.
5. Check the battery ground cable.
   5.1. A 6-gauge black cable connects the negative (–) battery post to the frame. The frame connection should be clean and tight. Visual inspection of the connection on the frame is very difficult. The best check for tightness is to pull on the black cable. If the cable moves at the connection end, disassemble the frame connection and clean the bolt, ring terminal, and nut. Reinstall the frame connection.
   5.2. Set the multimeter to 200 ohms. Place the red (+) probe on the unconnected end of the 6-gauge black cable, and place the black (–) probe on the vehicle frame **(Figure 11-12, Page 11-19)**. The reading should be continuity. If the reading is incorrect, ensure that terminal connections are clean and tight. If the connections are good and the reading is incorrect, repair or replace the cable.

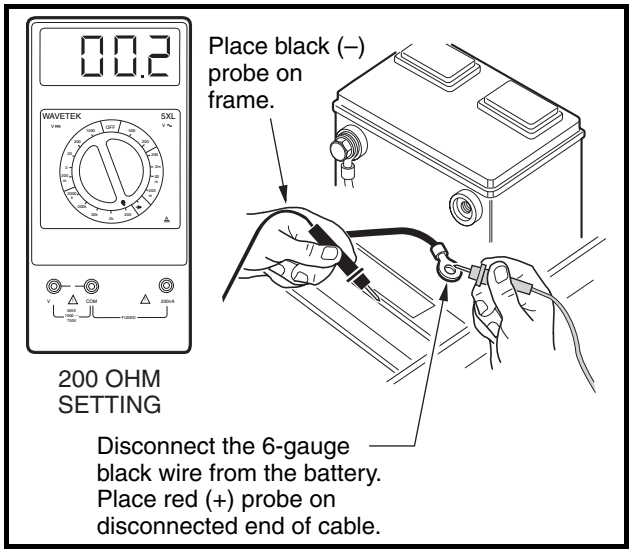

Figure 11-12 Battery Ground Cable Test

TEST PROCEDURE 4 – KEY SWITCH (STARTER CIRCUIT)

See General Warning, Section 10, Page 10-1.

1. Disconnect the battery cables as instructed. **See WARNING "To avoid unintentionally starting..." in General Warning, Section 10, Page 10-1.**

2. Remove the center dash assembly. **See Key Switch Removal, Section 12, Page 12-13.**

3. Ensure that the wires are connected correctly and are tight. If they are not, rewire or tighten as necessary.

4. **Pedal-Start vehicles:**

   4.1. Insert the key and turn the key to ON. Place the red (+) probe of the multimeter on the (2) terminal and the black (–) probe on the (1) terminal of the key switch. The reading should be continuity. If the reading is incorrect, replace the key switch **(Figure 11-13, Page 11-20)**.

5. **Key-Start vehicles:**

   5.1. Insert the key and turn the key to ON. Place the red (+) probe of the multimeter on the (B) terminal and the black (–) probe on the (A) terminal of the key switch. The reading should be continuity. If the reading is incorrect, replace the key switch. **See Key Switch Removal, Section 12, Page 12-13.**

   5.2. With the key still in the ON position, place the red (+) probe of the multimeter on the (B) terminal and the black (–) probe on the (S) terminal of the key switch. The reading should show no continuity. If the reading is incorrect, replace the key switch. If the reading is correct, leave the probes connected and proceed to the next step.

   5.3. Insert the key and hold the key in the START position. The reading should be continuity. If the reading is incorrect, replace the key switch **(Figure 11-14, Page 11-20)**. With the red (+) probe of the multimeter on the (B) terminal and the black (–) probe on the (A) terminal of the key switch, the reading should be continuity. If either reading is incorrect, replace the key switch. **See Key Switch Removal, Section 12, Page 12-13.**

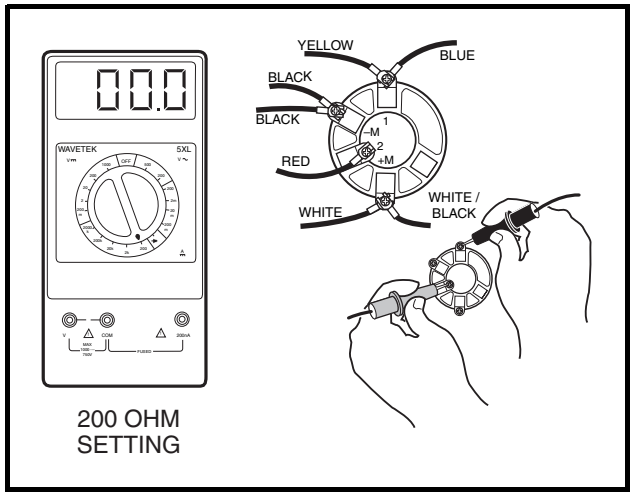

Figure 11-13 Key Switch Starter Circuit Test for Pedal-Start Vehicles

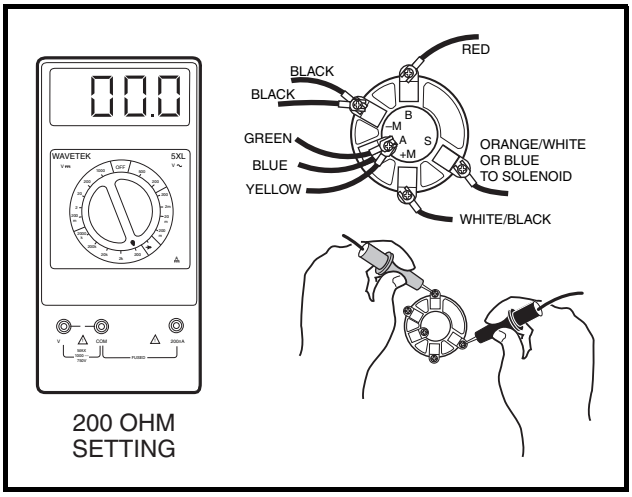

Figure 11-14 Key Switch Starter Circuit Test for Key-Start Vehicles

TEST PROCEDURE 5 – KEY SWITCH FOR KEY-START VEHICLES ONLY (ACCESSORY TERMINAL)

See General Warning, Section 10, Page 10-1.

1. Disconnect the battery cables as instructed. **See WARNING "To avoid unintentionally starting..." in General Warning, Section 10, Page 10-1.**
2. Remove the center dash assembly. **See Key Switch Removal, Section 12, Page 12-13.**
3. Ensure that wires are connected correctly and are tight. If they are not, rewire or tighten as necessary.
4. Insert the key and turn the switch to the ON position. With the multimeter set to 200 ohms, place the red (+) probe of the multimeter on the (B) terminal and the black (–) probe on the (A) terminal of the key switch **(Figure 11-15, Page 11-21)**. The reading should be continuity. If the reading is incorrect, replace the key switch.

TEST PROCEDURE 6 – ACCELERATOR PEDAL LIMIT SWITCH

See General Warning, Section 10, Page 10-1.

The accelerator pedal limit switch (present on pedal-start vehicles only) is the top switch located in the electrical component box. There is an 18-gauge green wire and an 18-gauge orange wire connected to this limit switch.

1. Disconnect the battery cables as instructed. **See WARNING "To avoid unintentionally starting..." in General Warning, Section 10, Page 10-1.**
2. Check for proper wiring and tight connections. **See Wiring Diagrams beginning on page 11-6.**
3. Set the multimeter to 200 ohms. Place the red (+) probe on the common (COM) terminal (green wire) of the limit switch and place the black (–) probe on the normally closed (NC) terminal (orange wire) of the limit switch.

4. Make sure the battery is disconnected. With the key switch in the OFF position, the Forward/Reverse handle in NEUTRAL, and the accelerator pedal in the UP position, the reading should be no continuity. With the accelerator pedal pressed, the reading should be continuity. If readings are incorrect, replace the switch.

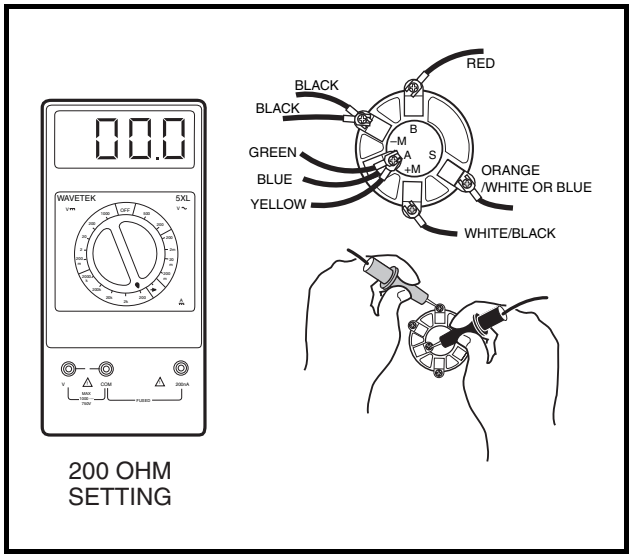

Figure 11-15 Key Switch Test – Accessory Terminal

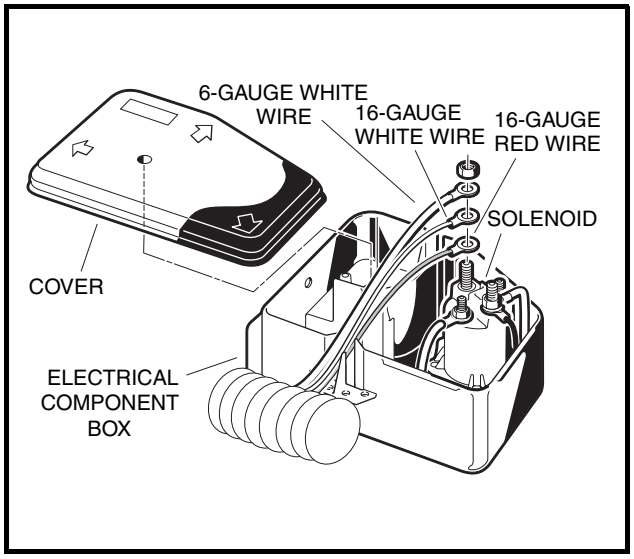

Figure 11-16 Solenoid Wire Removal

TEST PROCEDURE 7 – SOLENOID

See General Warning, Section 10, Page 10-1.

1. Disconnect the battery cables as instructed. **See WARNING "To avoid unintentionally starting..." in General Warning, Section 10, Page 10-1.**

2. Remove the electrical component box cover.

3. Ensure that the wires are connected correctly and are tight. If they are not, rewire or tighten as necessary.

4. Set a multimeter to 200 ohms. Place the red (+) probe on one of the small posts of the solenoid and place the black (–) probe on the other small post. The reading should be 14 to16 ohms. If the reading is not within limits, replace the solenoid.

5. Remove the 6-gauge white wire, the 16-gauge red wire, and 16-gauge white wire from the large post of the solenoid. Do not allow the wires to touch the frame or other components of the vehicle **(Figure 11-16, Page 11-21)**.

6. Set the multimeter to 200 ohms. Connect the red (+) probe to one of the large posts of the solenoid and connect the black (–) probe to the other large post **(Figure 11-17, Page 11-22)**.

7. Connect battery cables, positive (+) cable first, and tighten hardware to 12 ft-lb (16 N·m).

8. Place the Forward/Reverse handle in NEUTRAL and place the neutral lockout cam in the SERVICE (MAINTENANCE) position. Turn the key switch to the ON position. With the accelerator in the UP position, the reading on the multimeter should be no continuity. Press the accelerator pedal and listen for the solenoid click. There should be continuity. If either reading is incorrect, replace the solenoid.

Test Procedure 7 – Solenoid, Continued:

9. With the Forward/Reverse handle still in NEUTRAL and the neutral lockout cam in the SERVICE (MAINTENANCE) position, set the multimeter to 20 volts DC and place the red (+) probe on the large post that does not have wires connected to it. Place the black (–) probe on the vehicle frame. Turn key switch to the ON position, press accelerator pedal, and listen for solenoid click. The meter should read full battery voltage. If the reading is incorrect, replace the solenoid **(Figure 11-18, Page 11-22)**.

10. Disconnect the 6-gauge black wire from the negative (–) post of the battery before reconnecting the wires to the solenoid.

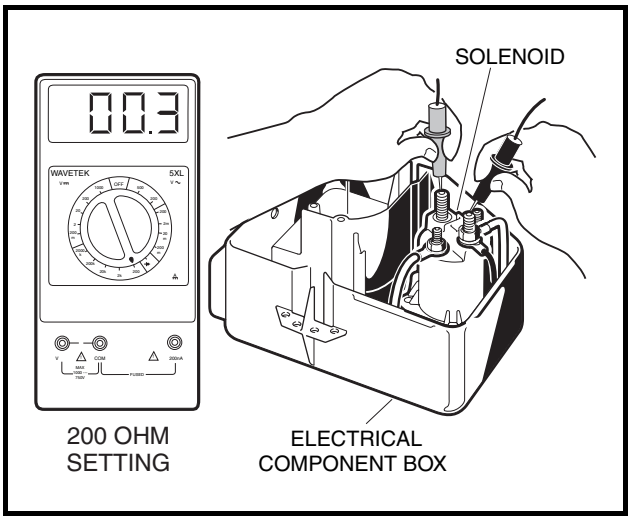

Figure 11-17 Solenoid Continuity Test

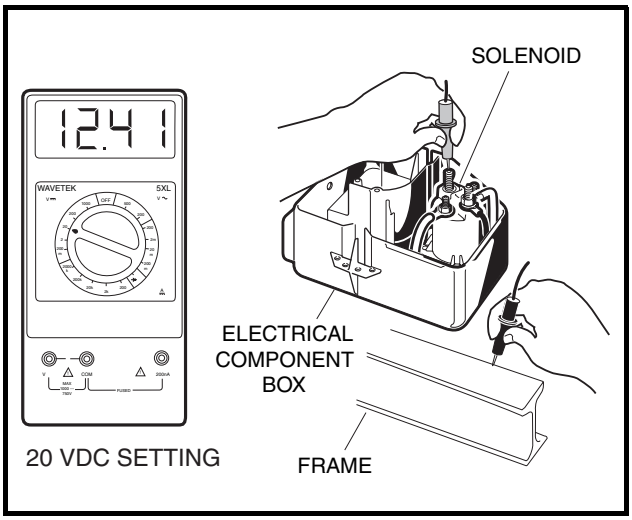

Figure 11-18 Solenoid Ground Test

TEST PROCEDURE 8 – NEUTRAL LOCKOUT LIMIT SWITCH

See General Warning, Section 10, Page 10-1.

This switch is located on the Forward/Reverse switch assembly. For pedal-start vehicles, a black wire, a green wire, and a white wire are connected to this limit switch. For key-start vehicles, a red wire and green wire are connected to this switch.

1. Disconnect the battery cables as instructed. **See WARNING "To avoid unintentionally starting..." in General Warning, Section 10, Page 10-1.**

2. Check for proper wiring and tight connections.

3. Set the multimeter to 200 ohms. Place the red (+) probe of the multimeter on the common (COM) terminal of the limit switch. Place the black (–) probe on the normally open (NO) terminal of the switch. Without the lever pressed, the reading should be no continuity. Press the lever, and the reading should be continuity. If either reading is incorrect, replace the limit switch **(Figure 11-19, Page 11-23)**.

4. Check to be sure the lobes on the cam are pressing the neutral lockout limit switch as the Forward/Reverse shifter is being shifted. The limit switch should make an audible click as it is pressed. If it does not, check for wear on the cam lobes. Be sure the cam snaps fully back into place. If the cam lobes still do not activate the limit switch, replace the cam.

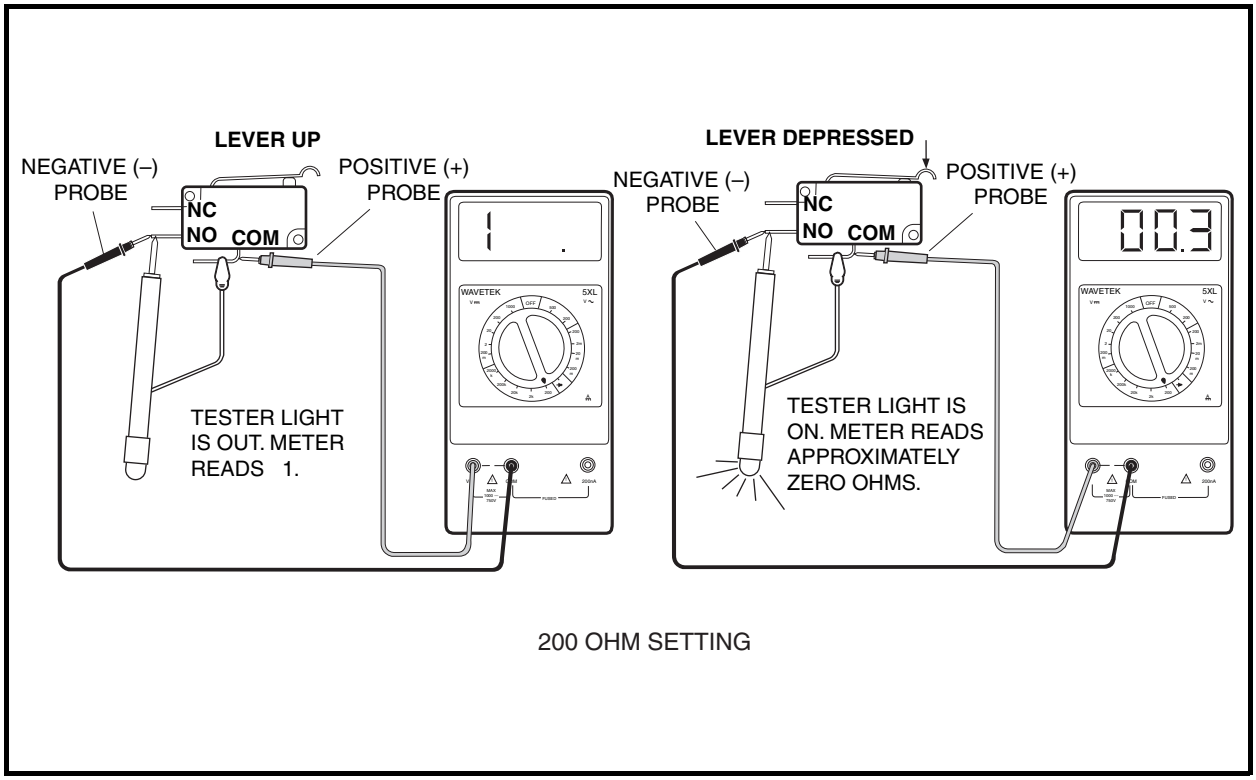

Figure 11-19 Neutral Lockout Limit Switch Test

TEST PROCEDURE 9 – STARTER/GENERATOR (STARTER FUNCTION)

See General Warning, Section 10, Page 10-1.

1. Disconnect the battery cables as instructed. **See WARNING "To avoid unintentionally starting..." in General Warning, Section 10, Page 10-1.**

2. Ensure that wires are connected correctly and are tight. If they are not, rewire or tighten as necessary.

3. Disconnect the wires from all the terminals on the starter/generator. Then place the black (–) probe of a multimeter, set to 200 ohms, on the starter/generator housing (scratch through the finish to ensure a good ground). While holding the black (–) probe against the housing, place the red (+) probe (one at a time) on the A1, A2, F1, F2 and DF terminals respectively **(Figure 11-20, Page 11-24)**. The readings should be no continuity. If the readings are incorrect, the starter/generator will need to be removed from the vehicle and disassembled by a qualified technician. **See Starter/Generator Removal, Section 12, Page 12-1.**

   - An incorrect reading from the A1 or A2 terminal indicates three possible problems: 1) a grounded A1 or A2 terminal, 2) a grounded wire in the brush area, or 3) a grounded armature/commutator.

   - If the F1 or F2 reading is incorrect, it indicates a possible grounded F1 or F2 terminal or a grounded field coil.

   - If the DF reading is incorrect, it indicates a possible grounded DF terminal or a grounded field coil.

4. Disconnect the ground wire from the A2 terminal and the green wire from the A1 terminal on the starter/generator.

Test Procedure 9 – Starter/Generator (Starter Function), Continued:

5. Using a multimeter set to 200 ohms, place the red (+) probe on the A1 terminal and the black (–) probe on the A2 terminal. The reading should be continuity. If the reading is incorrect, a possible open or poor contact in a brush assembly and/or open armature windings may be the cause. The starter/generator will need to be removed from the vehicle and disassembled by a qualified technician. **See Starter/Generator Removal, Section 12, Page 12-1.**

6. With the wires still disconnected, using a multimeter set on 200 ohms, place the red (+) probe on the F1 terminal and the black (–) probe on the F2 terminal. The reading should be between approximately 0.1 and 0.3 ohms. If the reading is incorrect, a possible open field coil or bad connections at terminals may be the cause. The starter/generator will need to be removed from the vehicle and disassembled by a qualified technician. **See Starter/Generator Removal, Section 12, Page 12-1.**

7. With the wires still disconnected, using a multimeter set to 200 ohms, place the red (+) probe on the DF terminal and the black (–) probe on the F1 terminal. The reading should be between 4.5 and 5.5 ohms. If the reading is incorrect, a possible grounded DF terminal and/or grounded field coil may be the cause. The starter/generator will need to be removed from the vehicle and disassembled by a qualified technician. **See Starter/Generator Removal, Section 12, Page 12-1.**

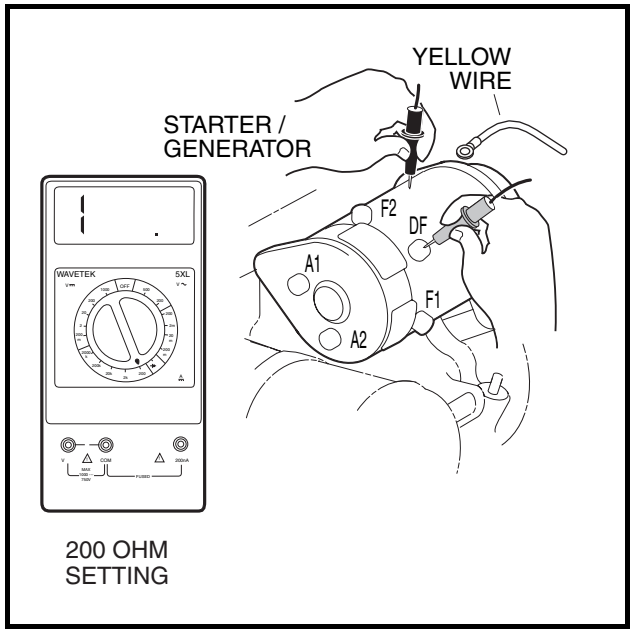

Figure 11-20 Check Starter Terminal Continuity

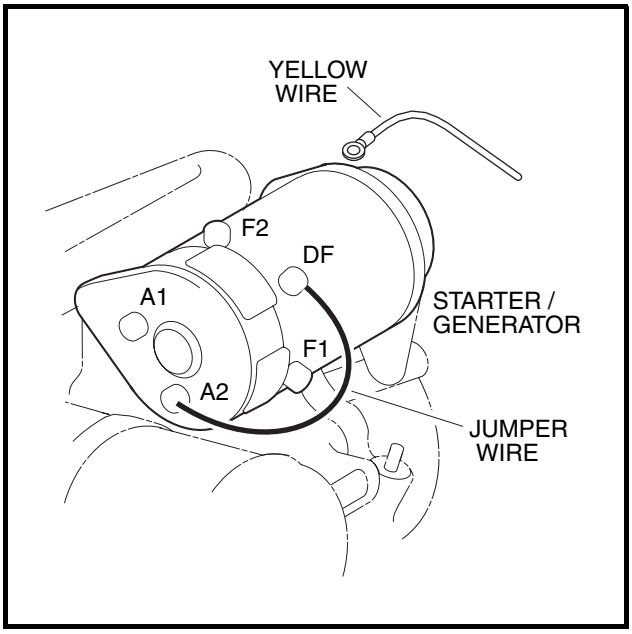

Figure 11-21 Jumper Wire Ground – DF to A2

TEST PROCEDURE 10 – WIRE CONTINUITY

See General Warning, Section 10, Page 10-1.

1. Disconnect the battery cables as instructed. **See WARNING "To avoid unintentionally starting..." in General Warning, Section 10, Page 10-1.**

2. To test a wire for continuity, disconnect either end from the electrical component it is attached to.

3. Set the multimeter to 200 ohms and place the red (+) probe on the terminal at one end of the wire. Place the black (–) probe on the other terminal end of the wire. The reading should be continuity. If the reading is incorrect, repair or replace the wire.

TEST PROCEDURE 11 – STARTER/GENERATOR (GENERATOR FUNCTION)

See General Warning, Section 10, Page 10-1.

NOTE: *Keep the battery connected while performing this test procedure.*

1. Place the neutral lockout cam in the SERVICE (MAINTENANCE) position, put the Forward/Reverse handle in the NEUTRAL position, and chock the wheels.
2. Ensure that the wires are connected correctly and are tight. If they are not, rewire or tighten as necessary.
3. Disconnect the yellow wire from the DF terminal on the starter/generator. Cover the connector on the yellow wire to make sure the yellow wire will not short to ground. Then, using a jumper wire, ground the DF terminal to the A2 terminal **(Figure 11-21, Page 11-24)**.
4. Using a multimeter set to 20 volts DC, place the red (+) probe on the positive (+) post of the battery, and place the black (–) probe on the negative (–) post. Start the engine and run it at full governed speed. The reading should show the voltage rising on the meter. If the voltage rises above 15.3 volts DC, test the voltage regulator. **See Test Procedure 12 – Voltage Regulator on page 11-25.** If the voltage does not rise, a tear-down inspection of the starter/generator will be necessary. **See Starter/Generator Removal, Section 12, Page 12-1.**
5. Connect the yellow wire to the DF terminal on the starter/generator.

TEST PROCEDURE 12 – VOLTAGE REGULATOR

See General Warning, Section 10, Page 10-1.

NOTE: *Keep the battery connected while performing this test procedure.*

1. Place the neutral lockout cam in the SERVICE (MAINTENANCE) position, put the Forward/Reverse handle in the NEUTRAL position, and chock the wheels.
2. Ensure that the wires are connected correctly and are tight. If they are not, rewire or tighten as necessary.
3. Check the engine RPM setting to ensure that it is adjusted correctly. **See Engine RPM Adjustment, Section 14, Page 14-11.**
4. With the battery in good condition and fully charged, run the engine for several minutes to bring the voltage regulator to operating temperature.
5. Turn the key switch to the OFF position, killing the engine. Using a multimeter set to 20 volts DC, place the red (+) probe on the large post of the solenoid with the red wire from the voltage regulator attached. Place the black (–) probe on the negative (–) battery post **(Figure 11-22, Page 11-26)**. Turn the key switch to the ON position. Press the accelerator to start the engine and run it at full governed speed. If the reading is between 14.7 and 15.3 volts, the regulator is good. If the reading is lower than 14.7 volts but rising steadily, check battery condition. **See Hydrometer Test on page 11-15.** If the reading is lower than 14.7 volts and not rising, and the starter/generator is good; or if the reading is over 15.3 volts and continues to rise, replace voltage regulator. **See Voltage Regulator Removal, Section 12, Page 12-12.**

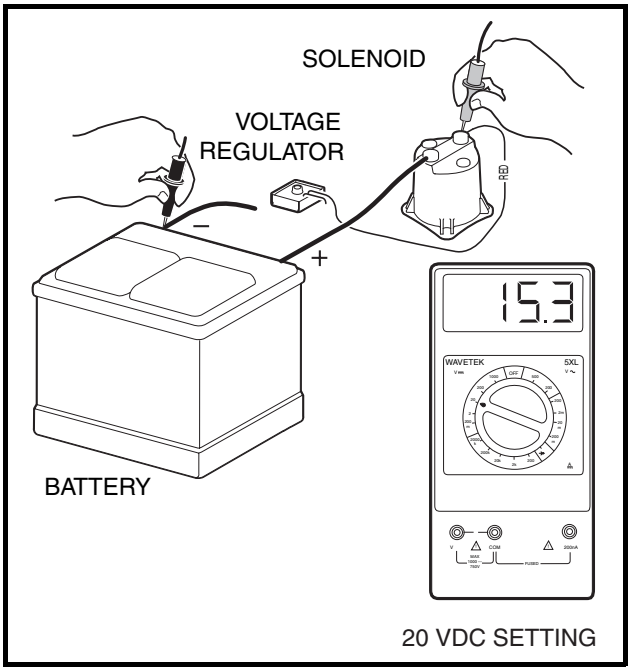

Figure 11-22 Voltage Regulator Test

TEST PROCEDURE 13 – DISCONNECTED KILL WIRE

See General Warning, Section 10, Page 10-1.

NOTE: *Keep the battery connected while performing this test procedure.*

1. Place the neutral lockout cam in the SERVICE (MAINTENANCE) position, put the Forward/Reverse handle in the NEUTRAL position, and chock the wheels.
2. Disconnect the engine kill white/black wire at the bullet connector located next to the RPM limiter **(Figure 11-24, Page 11-27)**.
3. Start the engine in a well ventilated area.
   - **Pedal-Start vehicle:** Turn the key switch to the ON position. Press the accelerator pedal to start the engine.
   - **Key-Start vehicle:** Turn the key all the way to the START position and release after the engine is started. The engine will idle.
4. If the engine begins to run, test the engine kill circuit for a shorted wire or other failed components in the engine kill circuit. **See Test Procedure 18 – Key Switch (Engine Kill Circuit) on page 11-34. See following WARNING.**

⚠ WARNING

- **When the white/black engine kill wire is disconnected, the engine will not stop running after the accelerator pedal is released (pedal-start vehicles) or the key switch is turned to the OFF position (key-start vehicles). It will be necessary to pull and hold the choke handle until the engine stops running.**

5. If the engine does not run, proceed to Test Procedure 14 – Ignition Spark on page 11-27.

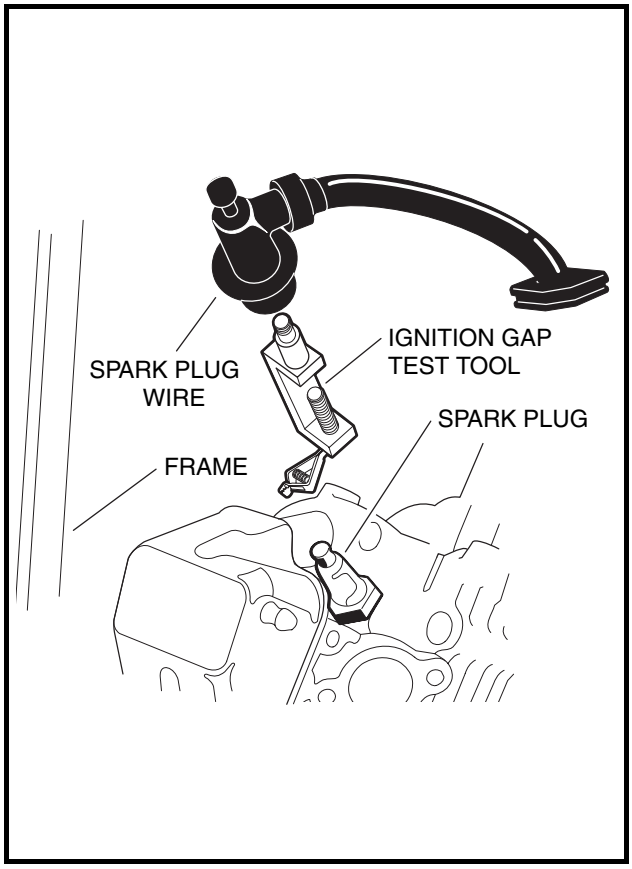

Figure 11-23 Ignition Spark Test

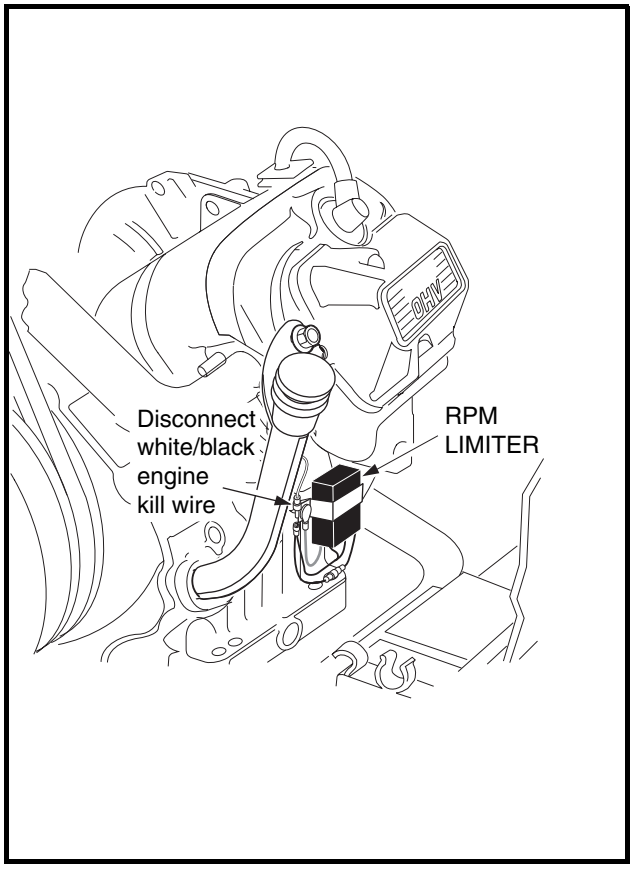

Figure 11-24 White/Black Engine Kill Wire

TEST PROCEDURE 14 – IGNITION SPARK

See General Warning, Section 10, Page 10-1.

NOTE: *Keep the battery connected while performing this test procedure.*

1. Place the neutral lockout cam in the SERVICE (MAINTENANCE) position, put the Forward/Reverse handle in the NEUTRAL position, and chock the wheels.

2. Remove the plug wire from the spark plug. Using an ignition spark gap test tool (Thexton 404® or equivalent), check for correct spark **(Figure 11-23, Page 11-27)**.

   2.1. Adjust the tester probes to approximately to 18,000 volts (18 Kv) setting (SE – *Small Engine Setting* on the Thexton 404 tool). Connect the tester to the spark plug wire, and connect the alligator clip to a solid engine ground.

   2.2. Start the engine. There should be a strong blue spark between the probes of the spark gap tester. If there is no spark, or if the spark is a faint yellow or red color, test components of the ignition circuit. **See Test Procedure 16 – Ignition Coil on page 11-28.**

3. If the spark gap tester tool indicates a strong blue spark, it is possible the spark plug has failed internally. Check the spark plug gap. The gap should be set at 0.027 to 0.031 of an inch (0.69 to 0.79 mm). If the gap is correct, replace the spark plug with a new part and test the engine for proper operation.

TEST PROCEDURE 15 – RPM LIMITER

See General Warning, Section 10, Page 10-1.

1. Disconnect the battery cables as instructed. **See WARNING "To avoid unintentionally starting..." in General Warning, Section 10, Page 10-1.**
2. Disconnect both of the bullet terminals **(Figure 11-25, Page 11-28)**.
3. Using a multimeter set to 200 ohms, place the red (+) probe on the brown ground wire and place the black (–) probe on one of the black wire female bullet connectors. The reading should be no continuity. If the reading is not correct, replace the RPM Limiter.
4. This test will find most bad RPM Limiters. Some of them may bench test okay but fail under a load due to heat while operating. Another method of testing is to replace the RPM Limiter and then run the engine. If the engine runs properly, keep the new RPM Limiter in the circuit.

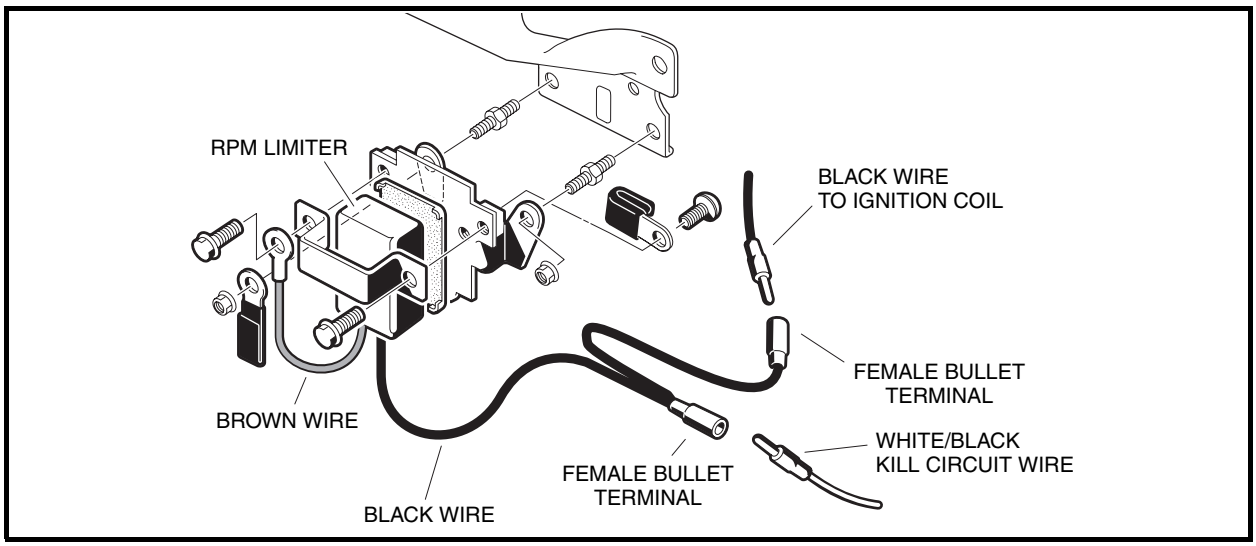

Figure 11-25 RPM Limiter

TEST PROCEDURE 16 – IGNITION COIL

See General Warning, Section 10, Page 10-1.

The following test procedures will properly detect a coil that has failed in most cases; however, in rare cases, some ignition coils can fail to operate at normal (warmer) operating temperatures. If the ignition coil has tested okay in the vehicle and on the bench, but fails to operate reliably, replace the coil with a known good coil and operate the engine for several minutes to ensure that the coil functions at normal operating temperature. If the new coil functions properly, keep the new coil in the circuit.

Test Procedure 16A – Ignition Coil – In Vehicle Test

1. Disconnect the battery cables as instructed. **See WARNING "To avoid unintentionally starting..." in General Warning, Section 10, Page 10-1.**
2. Using a multimeter set to 200 ohms, measure the primary coil resistance.
   2.1. Disconnect both of the bullet terminals at the RPM limiter **(Figure 11-25, Page 11-28)**. Place the red (+) probe of the meter on the male bullet terminal of the wire connecting to the ignition coil under the fan housing, and place the black (–) probe on a clean unpainted surface of the engine or frame **(Figure 11-26, Page 11-29)**.

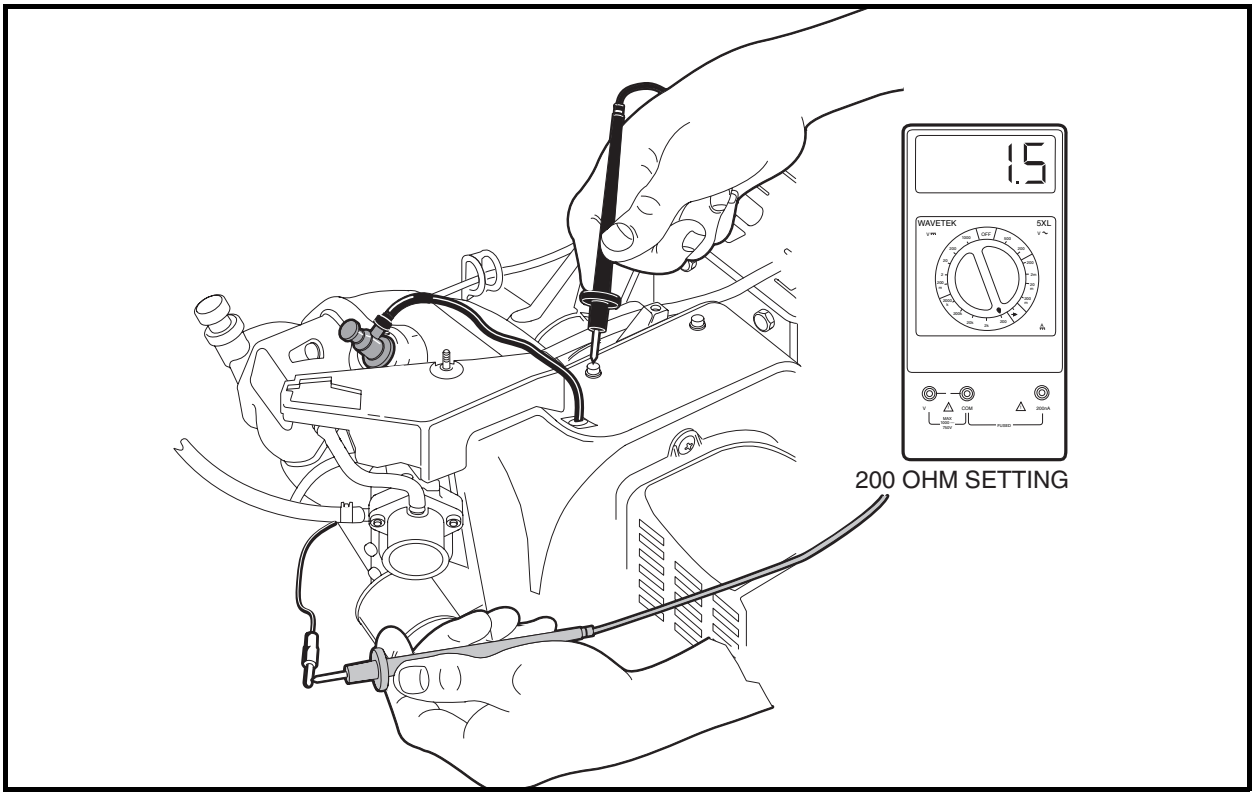

Figure 11-26 Primary Coil Resistance – In Vehicle Test

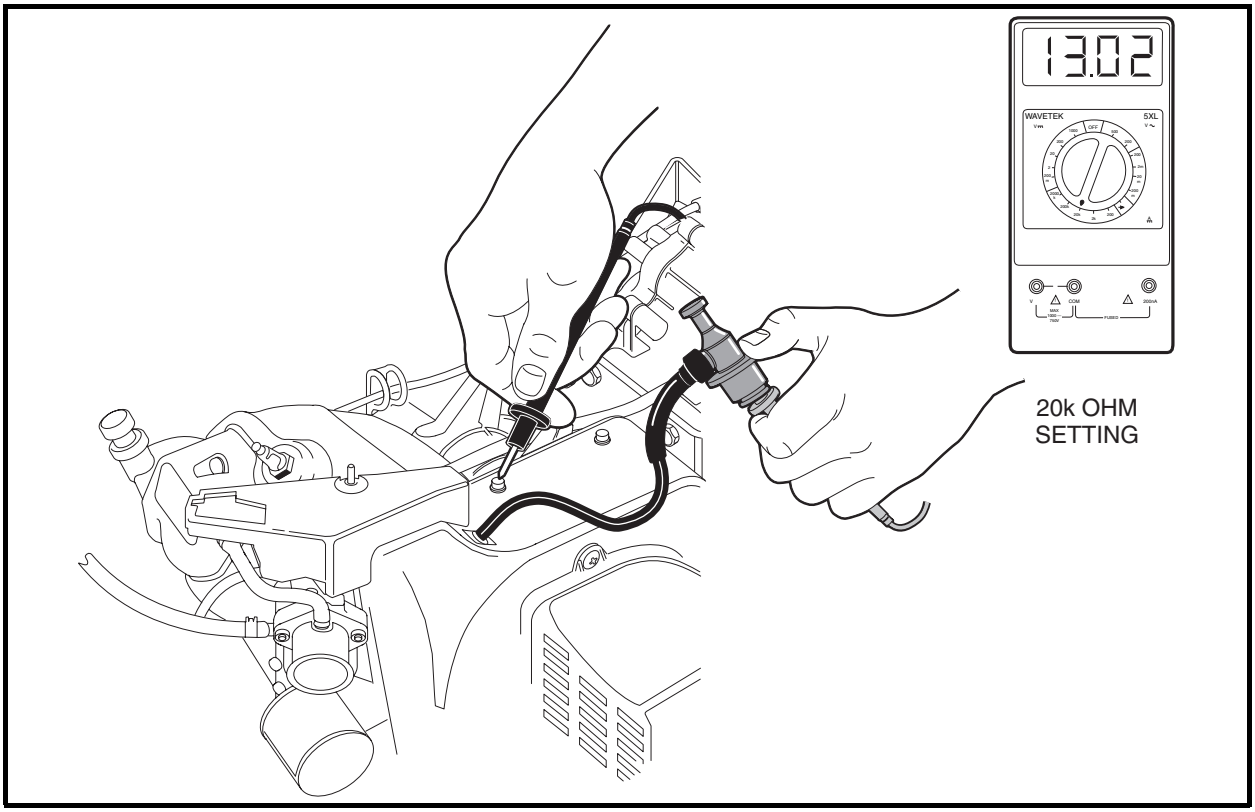

Figure 11-27 Secondary Coil Test – In Vehicle Test

Test Procedure 16A – Ignition Coil – In Vehicle Test, Continued:

2.2. If the resistance is not between 0.6 - 1.7 ohms, bench test the ignition coil. **See Test Procedure 16B – Ignition Coil – Bench Test on page 11-32.**

3. Using a multimeter set to 20k ohms, measure the resistance of the secondary coil and spark plug cap together.

3.1. Place the red (+) probe of the meter into the end of the spark plug cap that normally connects to the spark plug and place the black (–) probe on a clean unpainted surface of the engine or frame **(Figure 11-27, Page 11-29)**.

3.2. If the resistance is between 12.0k - 14.0k ohms, the secondary coil and spark plug cap are within acceptable limits; proceed to step 6 on page 11-32. If the resistance is not between 12.0k - 14.0k ohms, the spark plug cap and secondary coil must be tested independently from each other.

4. Test the spark plug cap separately from the secondary coil.

4.1. Remove the rubber gasket (1) on the plug cap (2) by rolling back the gasket onto the spark plug wire (3) **(Figure 11-28, Page 11-30)**.

4.2. Remove the cap from the wire by turning the cap counterclockwise three or four revolutions while gently pulling it off the wire **(Figure 11-29, Page 11-30)**.

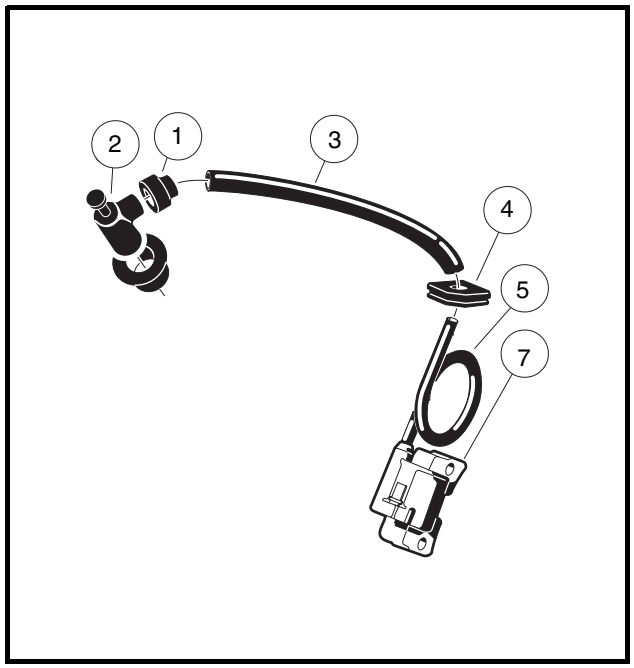

Figure 11-28 Ignition Coil and Cap

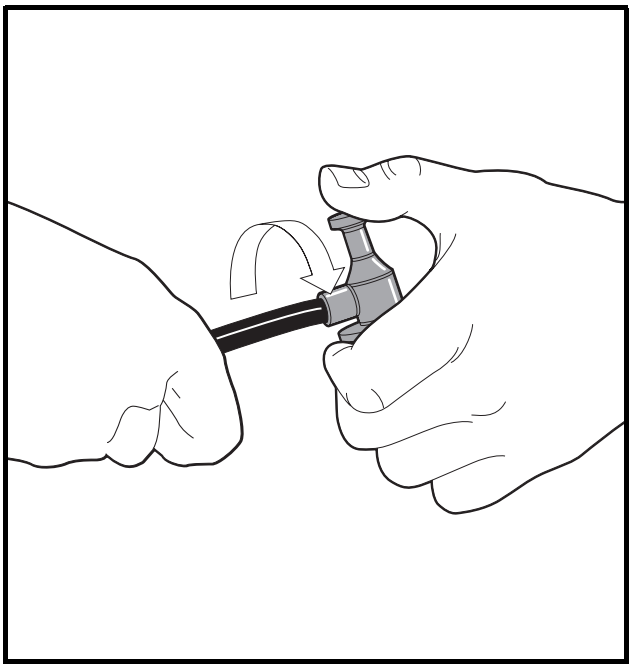

Figure 11-29 Spark Plug Cap Removal

4.3. Using a multimeter set to 20k ohms, place the red (+) probe of the multimeter into the end of the spark plug cap that normally connects to the spark plug and place the black (–) probe into the end of the cap with the internal screw **(Figure 11-30, Page 11-31)**. If the resistance is not between 4.5k - 6.0k ohms, the cap has failed and must be replaced. Proceed to the next step with the spark plug cap still removed.

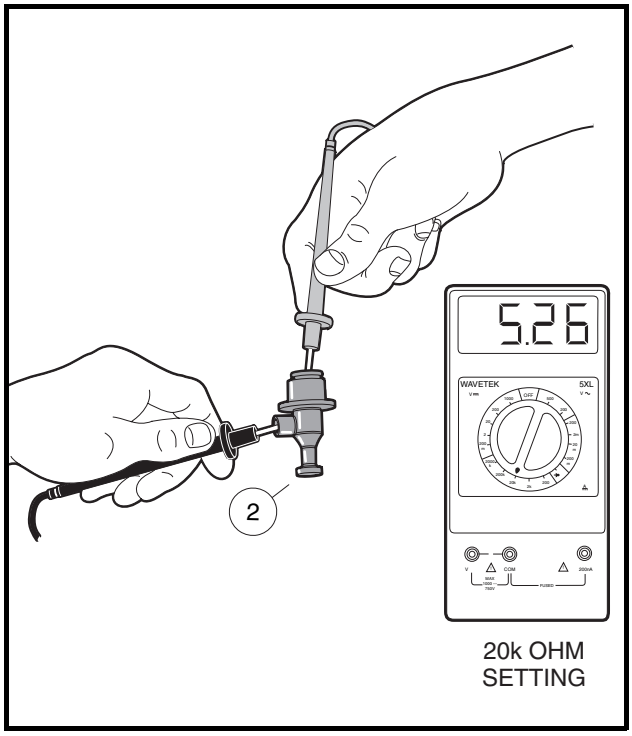

Figure 11-30 Spark Plug Cap Test

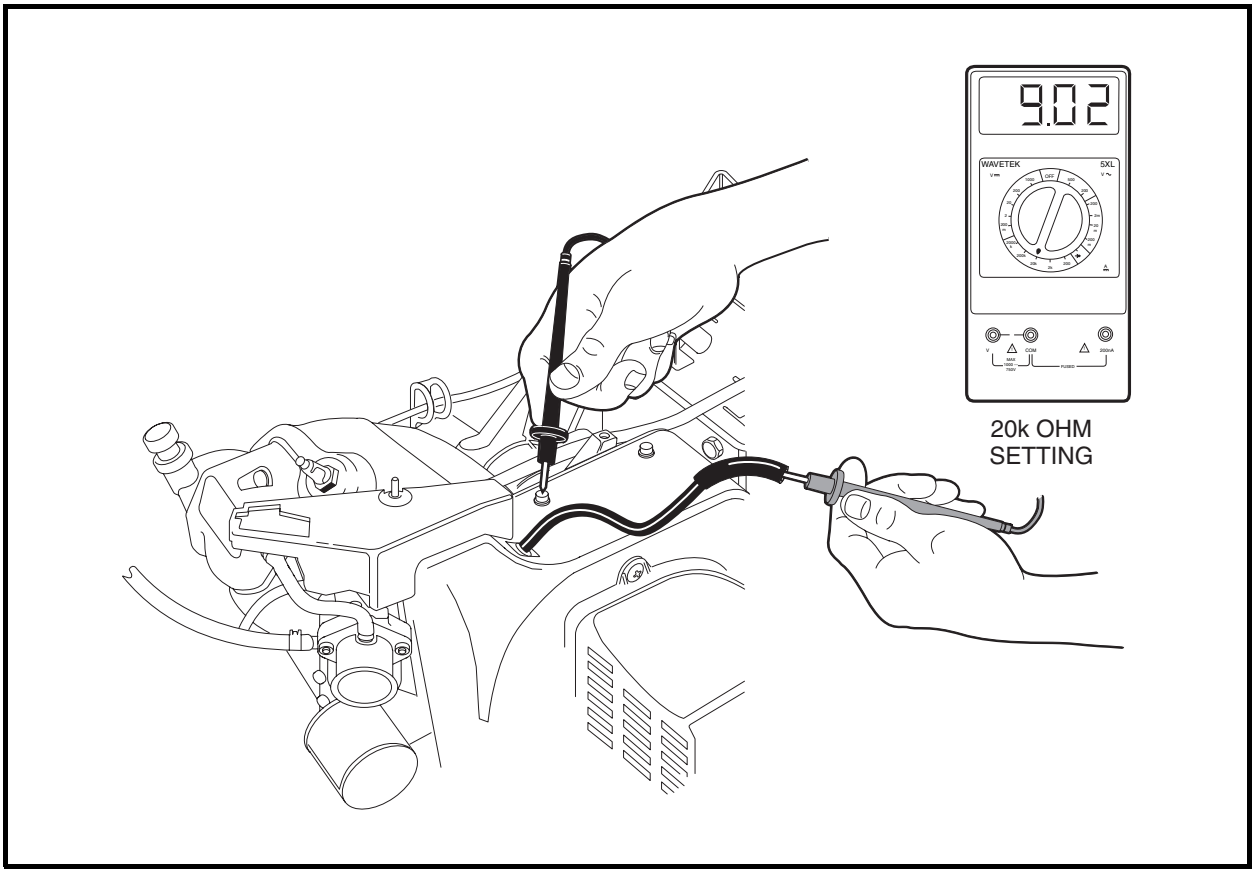

Figure 11-31 Secondary Coil Test Without Cap

Test Procedure 16A – Ignition Coil – In Vehicle Test, Continued:

5. Test the secondary coil separately from the spark plug cap.
   5.1. Using a multimeter set to 20k ohms, place the red (+) probe of the meter into the end of the spark plug wire and place the black (–) probe on a clean unpainted surface of the engine or frame **(Figure 11-31, Page 11-31)**. If the resistance is between 6.0k - 11.0k ohms, the secondary coil is within acceptable limits. If the resistance is not between 6.0k - 11.0k ohms, bench test the ignition coil. **See Test Procedure 16B – Ignition Coil – Bench Test on page 11-32.**
6. If the preceding tests indicate that the ignition coil resistance readings are within acceptable ranges, but the coil fails to function properly, proceed to the following bench test procedures.

Test Procedure 16B – Ignition Coil – Bench Test

1. Remove the coil from the engine. **See Ignition Coil Removal, Section 12, Page 12-25.**
2. Using a multimeter set to 200 ohms, measure the primary coil resistance.
   2.1. Place the black (–) probe of the meter on the terminal on the ignition coil (1), and place the red (+) probe on the core (2) **(Figure 11-32, Page 11-32)**.

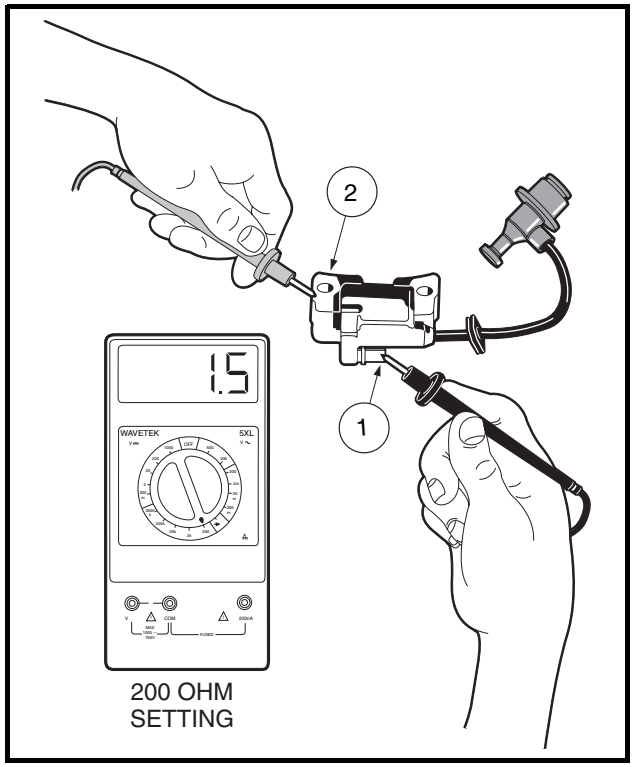

Figure 11-32 Primary Coil Resistance – Bench Test

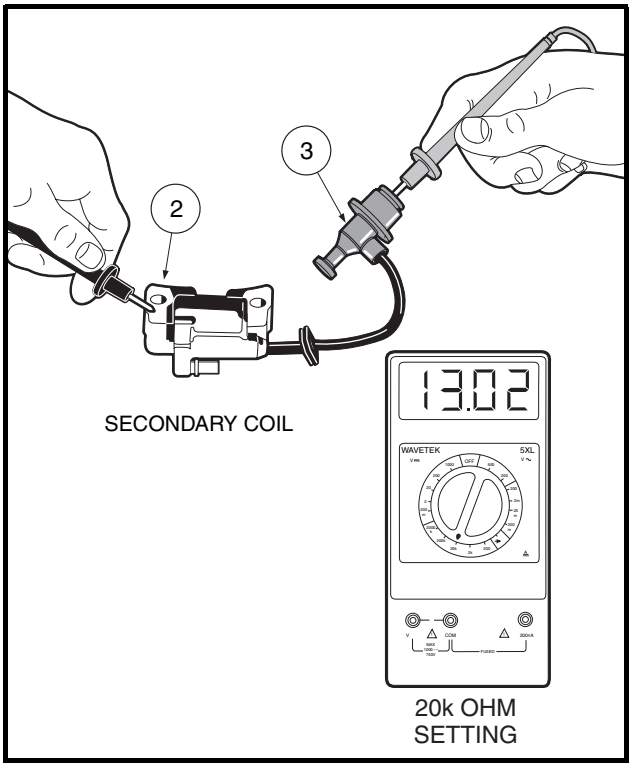

Figure 11-33 Secondary Coil and Cap Resistance – Bench Test

   2.2. If the resistance is not between 0.6k - 1.7k ohms, replace the ignition coil.
3. Using a multimeter set to 20k ohms, measure the resistance of the secondary coil and spark plug cap together.
   3.1. Place the red (+) probe of the meter into the end of the spark plug cap that normally connects to the spark plug (3) and place the black (–) probe on the core (2) **(Figure 11-33, Page 11-32)**.

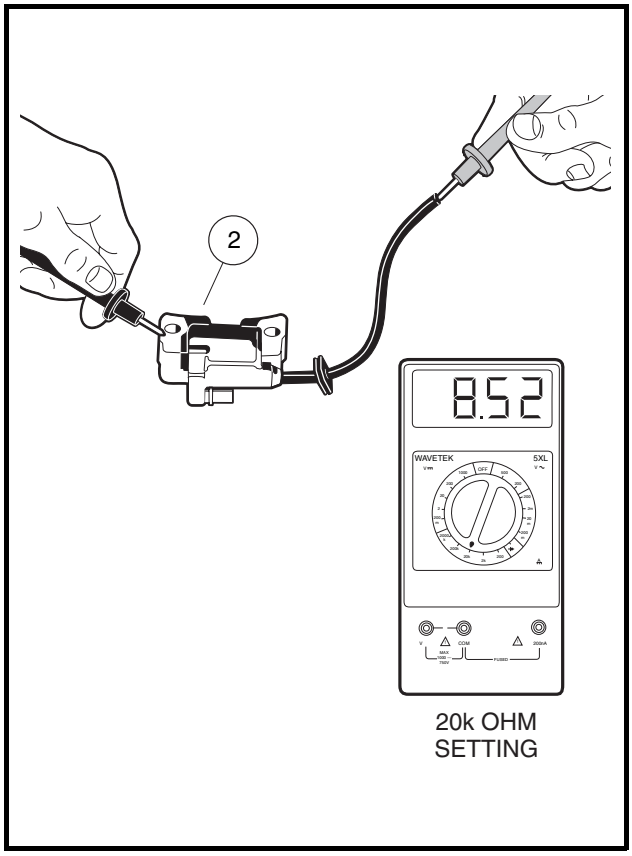

Figure 11-34 Secondary Coil Resistance – Bench Test

3.2. If the resistance is between 12.0k - 14.0k ohms, the secondary coil and spark plug cap are within acceptable limits; proceed to step 6 on page 11-33. If the resistance is not between 12.0k - 14.0k ohms, the spark plug cap and secondary coil must be tested independently from each other.

4. If not previously tested, test the spark plug cap separately from the secondary coil.

4.1. Remove the rubber gasket (1) on the plug cap (2) by rolling back the gasket onto the spark plug wire (3) **(Figure 11-28, Page 11-30)**.

4.2. Remove the cap from the wire by turning the cap counterclockwise three or four revolutions while gently pulling it off the wire **(Figure 11-29, Page 11-30)**.

4.3. Using a multimeter set to 20k ohms, place the red (+) probe of the multimeter into the end of the spark plug cap that normally connects to the spark plug and place the black (–) probe into the end of the cap with the internal screw **(Figure 11-30, Page 11-31)**. If the resistance is not between 4.5k - 6.0k ohms, the cap has failed and must be replaced. Proceed to the next step with the spark plug cap still removed.

5. Test the secondary coil separately from the spark plug cap.

5.1. Using a multimeter set to 20k ohms, place the red (+) probe of the meter into the end of the spark plug wire and place the black (–) probe on the core (2) **(Figure 11-34, Page 11-33)**. If the resistance is between 6.0k - 11.0k ohms, the secondary coil is within acceptable limits. If the resistance is not between 6.0k - 11.0k ohms, the ignition coil has failed and must be replaced.

6. If the preceding tests indicate that the ignition coil resistance readings are within acceptable ranges, but the coil fails to function properly, replace the ignition coil and cap.

TEST PROCEDURE 17 – KILL LIMIT SWITCH

See General Warning, Section 10, Page 10-1.

The kill limit switch for pedal-start vehicles is located inside the electrical component box. The accelerator kill switch is the lower of the two limit switches and has a white/black wire and black wire connected to it.

The kill limit switch for key-start vehicles is located inside the electrical component box and has a brown, red and orange wire connected to it.

1. Disconnect the battery cables as instructed. **See WARNING "To avoid unintentionally starting..." in General Warning, Section 10, Page 10-1.**
2. Check for proper wiring and tight connections.
3. Disconnect the wires from the limit switch and test the limit switch for continuity.

- **For pedal-start vehicles:** Place the red (+) probe of the multimeter on the common (COM) terminal (white/black wire) of the limit switch. Place the black (–) probe on the normally open (NO) terminal (black wire) of the limit switch. Without the lever pressed, the reading should be no continuity. Press the lever, and the reading should be continuity. If either reading is incorrect, replace the limit switch **(Figure 11-35, Page 11-34)**.
- **For key-start vehicles:** Place the red (+) probe of the multimeter on the common (COM) terminal (orange wire) of the limit switch. Place the black (–) probe on the normally open (NO) terminal (brown wire) of the limit switch. Without the lever pressed, the reading should be no continuity. Press the lever, and the reading should be continuity. If either reading is incorrect, replace the limit switch **(Figure 11-36, Page 11-34)**.

4. Connect wires to limit switch and check for tight connections.

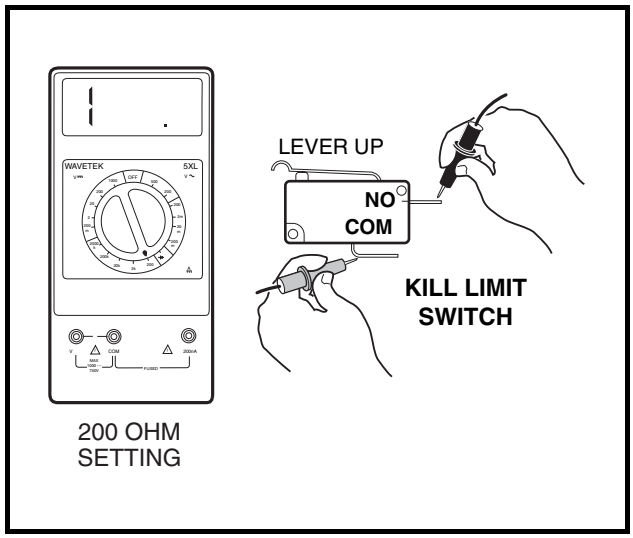

Figure 11-35 Kill Limit Switch for Pedal-Start Vehicle

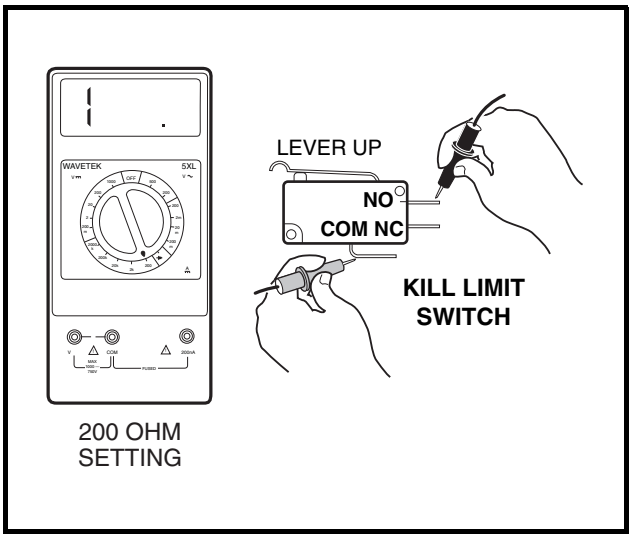

Figure 11-36 Kill Limit Switch for Key-Start Vehicle

TEST PROCEDURE 18 – KEY SWITCH (ENGINE KILL CIRCUIT)

See General Warning, Section 10, Page 10-1.

1. Disconnect the battery cables as instructed. **See WARNING "To avoid unintentionally starting..." in General Warning, Section 10, Page 10-1.**
2. Remove the center dash assembly. **See Key Switch Removal, Section 12, Page 12-13.**

3. Disconnect wires from the (+M) and (–M) terminals of the key switch.

4. Place the red (+) probe on the (+M) terminal and the black (–) probe on the (–M) terminal. With the key switch OFF, the reading should be continuity. With the key switch ON, the reading should be no continuity. If either reading is incorrect, replace the key switch **(Figure 11-37, Page 11-35 or Figure 11-38, Page 11-35)**.

5. Connect wires to the key switch. Make sure wires are connected correctly and are tight. If they are not, rewire or tighten as necessary.

6. Install dash panel in reverse order of removal.

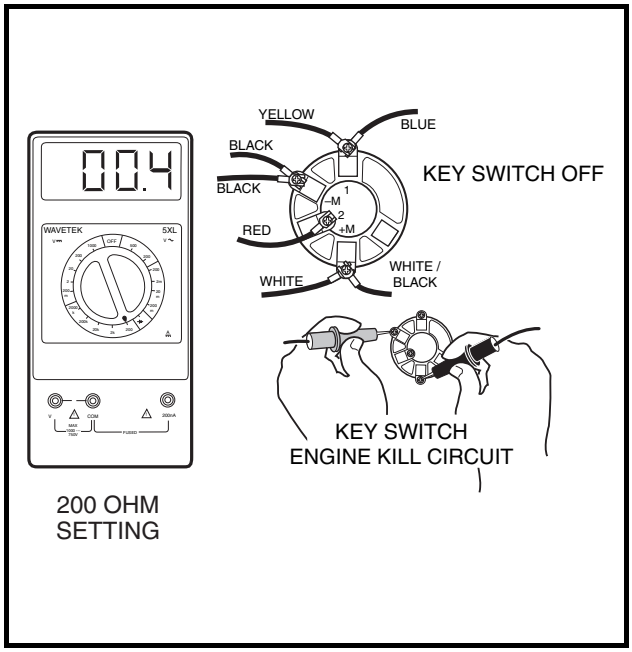

Figure 11-37 Key Switch Test – Engine Kill Circuit for Pedal-Start Vehicles

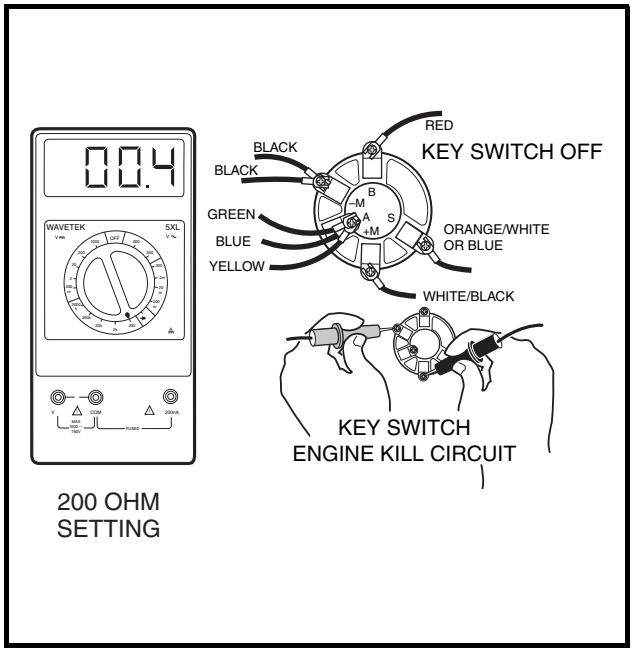

Figure 11-38 Key Switch Test – Engine Kill Circuit for Key-Start Vehicles

TEST PROCEDURE 19 – ENGINE KILL WIRE

See General Warning, Section 10, Page 10-1.

1. Disconnect the battery cables as instructed. **See WARNING "To avoid unintentionally starting..." in General Warning, Section 10, Page 10-1.**

2. Disconnect white/black wire bullet connector located at the engine RPM limiter **(Figure 11-24, Page 11-27)**.

3. Connect red (+) probe of multimeter to the male bullet terminal on the white/black wire and connect the black (–) probe to the vehicle frame.

4. Turn the key switch ON, place the Forward/Reverse handle in FORWARD, and press the accelerator pedal. There should be no continuity. If there is continuity, check for worn insulation on the white/black wire that may be allowing the engine kill wire to ground to the frame.

TEST PROCEDURE 20 – REVERSE BUZZER LIMIT SWITCH

See General Warning, Section 10, Page 10-1.

NOTE: *Keep the battery connected while performing this test procedure.*

The reverse buzzer limit switch is located on the Forward/Reverse shifter; red/white and orange wires are connected to it.

1. Place the neutral lockout cam in the SERVICE (MAINTENANCE) position, put the Forward/Reverse handle in the NEUTRAL position, and chock the wheels.
2. Move the Forward/Reverse handle to REVERSE and listen for an audible click from the limit switch. If there is no click, check the switch for proper alignment and switch arm movement.
3. If the switch is being activated but the buzzer does not function, place the red (+) probe of the multimeter on one terminal and the black (–) probe on the other terminal of the limit switch. Without the lever pressed, the reading should be no continuity. Press the lever and the reading should be continuity. If either reading is incorrect, replace limit switch. **See Reverse Buzzer Limit Switch Removal, Section 12, Page 12-21.**

TEST PROCEDURE 21 – REVERSE BUZZER

See General Warning, Section 10, Page 10-1.

The front reverse buzzer is mounted to the center dash assembly under the front body. The Turf 6, Carryall 6, and TransPorter vehicles have a second reverse buzzer mounted to the top of the left rear fender. The Villager 6 and 8 vehicles have a rear reverse buzzer that is mounted on a bracket at the left rear of the vehicle.

1. Disconnect the battery cables as instructed. **See WARNING "To avoid unintentionally starting..." in General Warning, Section 10, Page 10-1.**
2. To test the front reverse buzzer, remove center dash panel. **See Key Switch Removal, Section 12, Page 12-13.**
3. Check for proper wiring and tight connections. Using a multimeter, individually check for continuity through each wire that connects to the reverse buzzer. **See Wiring Diagrams beginning on page 11-6.** If the buzzer will not function when properly wired, replace the buzzer.

TEST PROCEDURE 22 – LOW OIL WARNING LIGHT

See General Warning, Section 10, Page 10-1.

1. Disconnect the battery cables as instructed. **See WARNING "To avoid unintentionally starting..." in General Warning, Section 10, Page 10-1.**
2. Remove the center dash assembly. **See Key Switch Removal, Section 12, Page 12-13.**
3. Ensure that the wires are connected correctly and are tight. If they are not, rewire or tighten as necessary. **See Wiring Diagrams beginning on page 11-6.**
4. Disconnect the yellow wire (to the oil level sensor) from the terminal on the low oil warning light. Using an alligator clip jumper wire, connect the low oil warning light terminal to the vehicle frame. Connect the red (+) battery cable to the positive (+) battery post, then attach the black (–) cable to the negative (–) battery post.
5. Turn the key switch ON. The low oil warning light should illuminate. If it does not, check continuity of the yellow wire that connects the key switch to the low oil warning light. If there is no continuity in the wire, replace the wire. Then test the key switch. **See Test Procedure 4 – Key Switch (Starter Circuit) on page 11-19.** If the yellow wire and the key switch test okay, then replace the low oil warning light.

TEST PROCEDURE 23 – OIL LEVEL SENSOR

See General Warning, Section 10, Page 10-1.

NOTE: *Keep the battery connected while performing this test procedure.*

1. Place the neutral lockout cam in the SERVICE (MAINTENANCE) position, put the Forward/Reverse handle in the NEUTRAL position, turn the key switch to the OFF position, disconnect the spark plug wire, and chock the wheels.
2. Ensure that the low oil warning light and all connecting wires are functioning correctly. **See Test Procedure 22 – Low Oil Warning Light on page 11-36.**
3. Drain the engine oil into an approved container and properly dispose of used oil.
4. Turn the key switch ON, closing the circuit. The low oil warning light should illuminate. If the low oil warning light does not illuminate, the oil level sensor needs to be replaced. **See Oil Level Sensor Removal, Section 13, Page 13-6.**
5. Install a new oil filter and fill the engine with new oil before returning the vehicle to service. **See Engine Oil, Section 10, Page 10-6.**

TEST PROCEDURE 24 – NEUTRAL LOCKOUT CAM

See General Warning, Section 10, Page 10-1.

1. Check to be sure the lobes on the cam are pressing the neutral lockout limit switch lever as the Forward/Reverse handle is being shifted. The limit switch should make an audible click as it is pressed. If it does not, check for wear on the cam lobes. Be sure the cam has snapped fully back into place. If the cam lobes still do not activate the limit switch, replace the cam.

TEST PROCEDURE 25 – BATTERY TEST (UNDER LOAD)

See General Warning, Section 10, Page 10-1.

NOTE: *Keep the battery connected while performing this test procedure.*

1. Place the neutral lockout cam in the SERVICE (MAINTENANCE) position, put the Forward/Reverse handle in the NEUTRAL position, and chock the wheels.
2. Set a multimeter to 20 volts DC and place the red (+) probe on the F2 (white wire) terminal on the starter/generator. Place the black (–) probe on the negative (–) battery post.
3. Place battery under load.
   - 3.1. **Pedal-start vehicles:** Turn the key switch to the ON position, leave the Forward/Reverse shifter in the NEUTRAL position and press the accelerator pedal (with the accelerator pedal pressed, the battery is under load).
   - 3.2. **Key-start vehicles:** Turn the key switch to the ON position, and hold it in the START position while noting the voltage reading on the multimeter (with the key in the START position the battery is under load).
4. If the voltage reading is over 9.6 volts, with an electrolyte temperature of 70 °F (21 °C), check the starter/generator. **See following NOTE.**

NOTE: *The voltage reading listed is for electrolyte at 70 °F (21 °C). At lower electrolyte temperatures the voltage reading will be lower.*

5. If the reading is below 9.6 volts, with an electrolyte temperature of 70 °F (21 °C), check the battery. **See Test Procedure 1 – Battery on page 11-15.**

Test Procedure 25 – Battery Test (Under Load), Continued:

6. If the reading is zero, there may be no continuity across the large posts of the solenoid. **See Test Procedure 7 – Solenoid on page 11-21.**
7. If all of the test results are good and the voltage reading is zero, there may be a broken or damaged 6-gauge white wire from the solenoid to the starter/generator. **See Test Procedure 9 – Starter/Generator (Starter Function) on page 11-23.**

TEST PROCEDURE 26 – FUEL LEVEL SENDING UNIT

See General Warning, Section 10, Page 10-1.

⚠ WARNING

- **To avoid the possibility of fire or explosion, make sure the fuel tank cap is securely in place while performing this test procedure.**

1. Disconnect the battery cables as instructed. **See WARNING "To avoid unintentionally starting..." in General Warning, Section 10, Page 10-1.**
2. Disconnect the orange wire from the center post of the fuel level sending unit.
3. With a multimeter set to 2 k ohms, place the red (+) probe of the multimeter on the center post of the sending unit. Place the black (–) probe on the ground connection of the sending unit **(Figure 11-39, Page 11-38)**.
4. The following resistance readings in ohms should be obtained depending on the position of the float inside the fuel tank. The resistance reading will vary according to the exact position of the float. The chart below may be used as a guideline to determine if the fuel level sending unit is operating correctly. Make sure the float is at the surface of the fuel in the tank.

FLOAT POSITION	RESISTANCE READING	FUEL GAUGE READINGS
Lower position (tank empty)	240 ± 20 ohms	Empty
Center position (tank half full)	120 ± 20 ohms	Half full
Upper position (tank full)	60 ± 20 ohms	Full

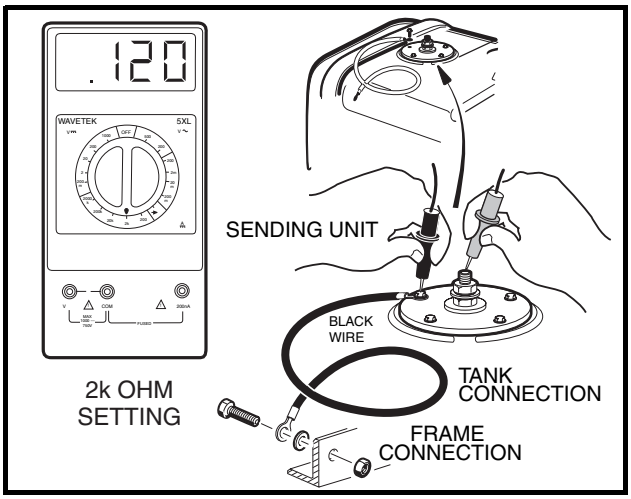

Figure 11-39 Fuel Level Sending Unit Test

5. If the readings are within the specifications listed above, the fuel level sending unit is working properly. If the readings are incorrect, the fuel level sending unit has failed and the fuel tank must be replaced. **See Fuel Tank Removal, Section 14, Page 14-23.**
6. If the readings are correct and the fuel gauge does not function correctly, check the continuity of the orange wire from the fuel level sending unit to the fuel gauge/hour meter. Leave the battery disconnected while checking continuity. Also check the continuity of the blue wire from the fuel gauge/hour meter to the key switch, and the black ground wires at the fuel level sending unit and at the fuel gauge/hour meter. **See Fuel Gauge/Hour Meter Removal, Section 12, Page 12-23.**
7. If the readings are correct according to the position of the float, but give an incorrect reading on the fuel gauge/hour meter, test the fuel gauge/hour meter. **See Test Procedure 27 – Fuel Gauge on page 11-39.**

TEST PROCEDURE 27 – FUEL GAUGE

See General Warning, Section 10, Page 10-1.

1. Disconnect the battery cables as instructed. **See WARNING "To avoid unintentionally starting..." in General Warning, Section 10, Page 10-1.**
2. Remove the center dash assembly to gain access to the back of the fuel gauge/hour meter. **See Key Switch Removal, Section 12, Page 12-13.**
3. Disconnect the orange wire from the fuel gauge/hour meter.
4. Set a multimeter to 20 volts DC and place the red (+) probe of the multimeter on the positive (+) post of the battery. Place the black (–) probe on the negative (–) post of the battery. Record the voltage reading.
5. Set a multimeter to 20 volts DC and place the red (+) probe of the multimeter on the (2) terminal of the fuel gauge/hour meter with the blue wire. Place the black (–) probe on the (3) terminal of the fuel gauge/hour meter with the black wire **(Figure 11-40, Page 11-39)**.
6. Connect battery cables, positive (+) cable first, and tighten hardware to 12 ft-lb (16 N·m).
7. Turn the key switch ON. The voltage reading should be the same as the battery voltage reading recorded earlier. If not, check the continuity of the blue and black wires **(Figure 11-40, Page 11-39)**.
8. The orange wire should remain disconnected for this step. With the black probe still on the terminal (3) of the fuel gauge/hour meter, place the red (+) probe of the multimeter on the (1) terminal of the fuel gauge/hour meter. The voltage reading should be the same as the full battery voltage reading obtained in step 4. If the reading is incorrect, replace fuel gauge/hour meter **(Figure 11-41, Page 11-39)**.

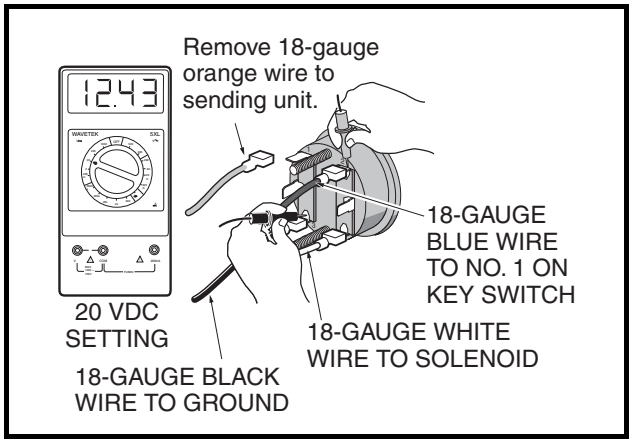

Figure 11-40 Fuel Gauge Test

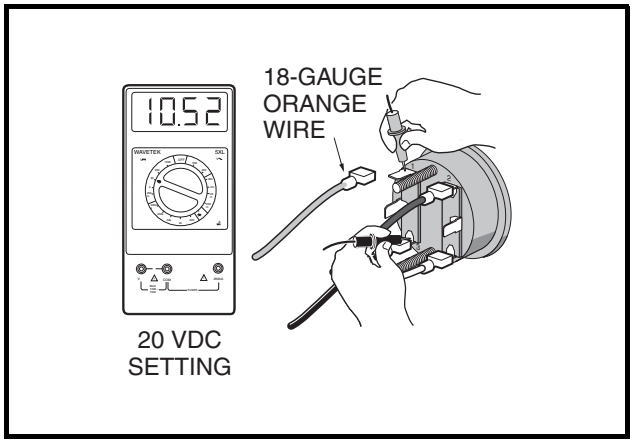

Figure 11-41 Fuel Gauge Voltage Test

TEST PROCEDURE 28 – HOUR METER

See General Warning, Section 10, Page 10-1.

NOTE: *Keep the battery connected while performing this test procedure.*

1. Place the neutral lockout cam in the SERVICE (MAINTENANCE) position, put the Forward/Reverse handle in the NEUTRAL position, and chock the wheels.
2. Turn the key switch to ON and record the current hour meter reading.
3. Press and hold the accelerator pedal to run the engine for at least six minutes (the meter records in six-minute increments). **See following DANGER.**

⚠ DANGER

- **Do not operate gasoline vehicle in an enclosed area without proper ventilation. The engine produces carbon monoxide, which is an odorless, deadly poison.**

4. If the reading does not change after six minutes, then replace the fuel gauge/hour meter.

TEST PROCEDURE 29 – RELAY (ENGINE KILL CIRCUIT)

See General Warning, Section 10, Page 10-1.

The relay (present on key-start vehicles only) is located in the electrical component box. **See Relay Removal, Section 12, Page 12-28.**

1. Disconnect the battery cables as instructed. **See WARNING "To avoid unintentionally starting..." in General Warning, Section 10, Page 10-1.**
2. Disconnect the 6-gauge white wire from the F2 post on the starter/generator **(Figure 11-42, Page 11-40)**. Cover the terminal end of the wire with electrical tape to prevent electrical contact.
3. Remove the cover from the electrical component box.
4. Disconnect the white/black wire and the black wire from the normally closed (NC) relay terminals. Cover the wire terminal ends with tape to prevent electrical contact **(Figure 11-43, Page 11-40)**.

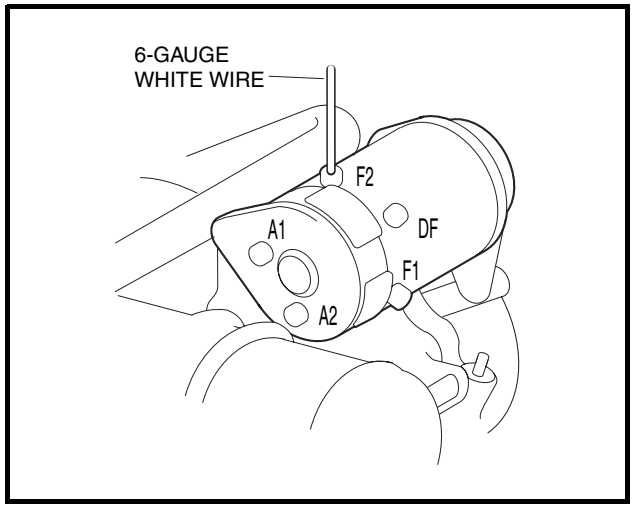

Figure 11-42 Starter/Generator Wire Removal

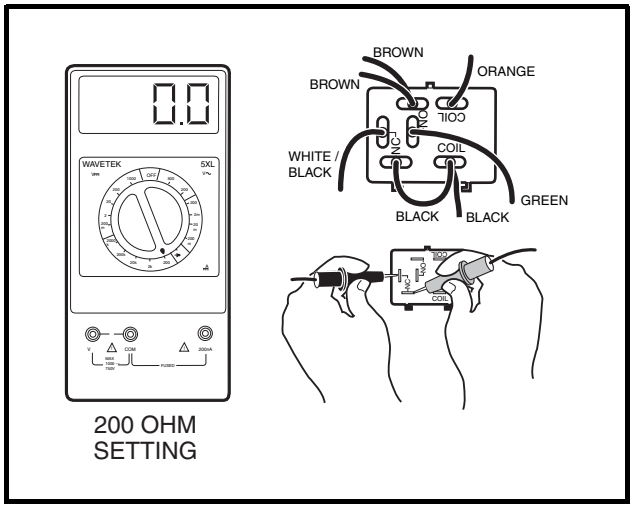

Figure 11-43 Engine Kill Circuit Relay Test

5. Connect battery cables, positive (+) cable first, and tighten hardware to 12 ft-lb (16 N·m).
6. Using a multimeter set to 200 ohms, place the two probes onto the two normally closed (NC) terminals on the relay **(Figure 11-43, Page 11-40)**. With the key switch in the OFF position, the reading should show continuity. Insert the key and turn the key switch to the ON position. The reading should be no continuity. If either reading is incorrect, replace the relay.
7. Disconnect the battery cables as instructed. **See WARNING "To avoid unintentionally starting..." in General Warning, Section 10, Page 10-1.**
8. Remove the tape and reconnect the wires to the relay. Install the electrical component box cover.
9. Connect the 6-gauge white wire to the F2 post on the starter/generator.
10. Connect battery cables, positive (+) cable first, and tighten hardware to 12 ft-lb (16 N·m). **See Figure 10-1, Section 10, Page 10-3.** Coat terminals with Battery Terminal Protector Spray (CCI P/N 1014305) to minimize corrosion.

TEST PROCEDURE 30 – RELAY (STARTER AND NEUTRAL LOCKOUT CIRCUITS)

See General Warning, Section 10, Page 10-1.

The relay (present on key-start vehicles only) is located in the electrical component box. **See Relay Removal, Section 12, Page 12-28.**

1. Disconnect the battery cables as instructed. **See WARNING "To avoid unintentionally starting..." in General Warning, Section 10, Page 10-1.**
2. Disconnect the 6-gauge white wire from the F2 post on the starter/generator **(Figure 11-42, Page 11-40)**. Cover the terminal end of the wire with electrical tape to prevent electrical contact.
3. Remove the cover from the electrical component box.
4. Disconnect the two brown wires and one green wire from the normally open (NO) terminals on the relay. Cover the wire terminal ends with tape to prevent electrical contact **(Figure 11-44, Page 11-42)**.
5. Connect battery cables, positive (+) cable first, and tighten hardware to 12 ft-lb (16 N·m).
6. Using a multimeter set to 200 ohms, place the two probes onto the two normally open (NO) terminals on the relay **(Figure 11-44, Page 11-42)**. With the key switch to the OFF position, the reading should show no continuity. Turn the key switch to the START position. The reading should be continuity. If either reading is incorrect, replace the relay.
7. Disconnect the battery cables as instructed. **See WARNING "To avoid unintentionally starting..." in General Warning, Section 10, Page 10-1.**
8. Connect the wires to the relay. Install the electrical component box cover.
9. Connect the 6-gauge white wire to the F2 post on the starter/generator.
10. Connect battery cables, positive (+) cable first, and tighten hardware to 12 ft-lb (16 N·m). **See Figure 10-1, Section 10, Page 10-3.** Coat terminals with Battery Terminal Protector Spray (CCI P/N 1014305) to minimize corrosion.

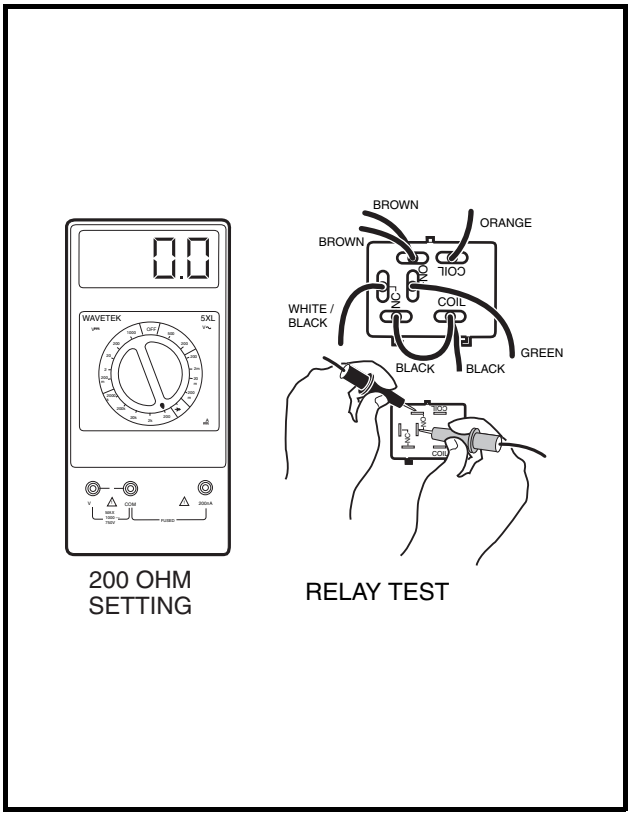

Figure 11-44 Starter/Generator and Neutral Lockout Circuits Relay Test

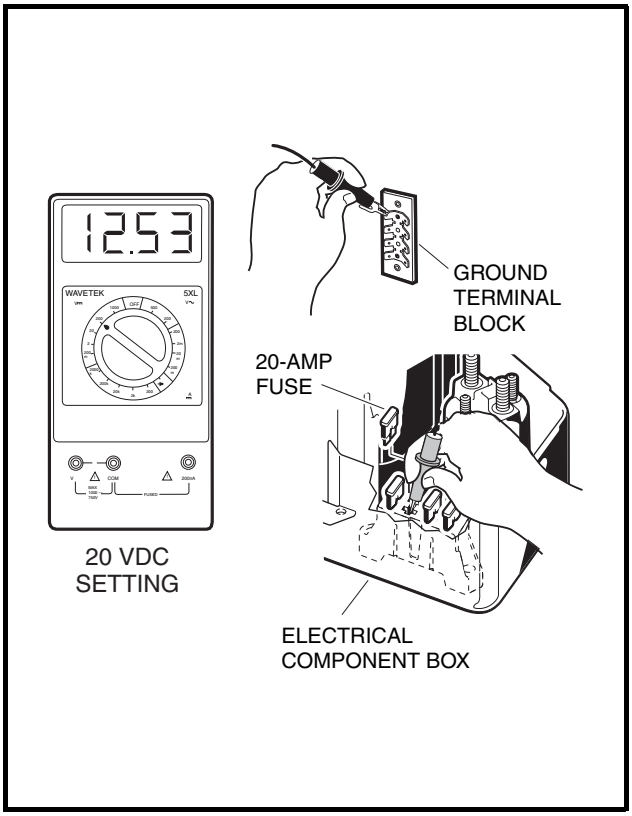

Figure 11-45 Battery Voltage Supply Test

TEST PROCEDURE 31 – BATTERY VOLTAGE SUPPLY

See General Warning, Section 10, Page 10-1.

1. Disconnect the battery cables as instructed. **See WARNING "To avoid unintentionally starting..." in General Warning, Section 10, Page 10-1.**
2. Remove the center dash assembly. **See Key Switch Removal, Section 12, Page 12-13.**
3. Connect battery cables, positive (+) cable first, and tighten hardware to 12 ft-lb (16 N·m).
4. Place an alligator clip on the black (–) probe of the multimeter and connect the alligator clip to the terminal block located on the frame under the front body **(Figure 11-45, Page 11-42)**.
5. Remove the fuse located at the yellow wire position in the fuse block.
6. Place the red (+) probe of the multimeter on the terminal connector inside the fuse block across from the yellow wire connector.

NOTE: *Make sure the red probe is placed on the same side (hot side) as the 10-gauge red wire.*

7. Set the multimeter to 20 volts DC. The reading should be at least 12.4 volts.
8. If the there is no voltage reading, check continuity of the 10-gauge red wire from the fuse block to the solenoid. Check continuity of the 10-gauge black wire from the terminal block to the frame ground.

TEST PROCEDURE 32 – HEADLIGHT SWITCH

See General Warning, Section 10, Page 10-1.

1. Disconnect the battery cables as instructed. **See WARNING "To avoid unintentionally starting..." in General Warning, Section 10, Page 10-1.**

2. Remove the center dash assembly. **See Key Switch Removal, Section 12, Page 12-13.**

3. Use a multimeter set on 20 volts DC, place alligator clips on the multimeter probes. Connect the black (–) probe to the terminal block under the front body **(Figure 11-46, Page 11-43)**.

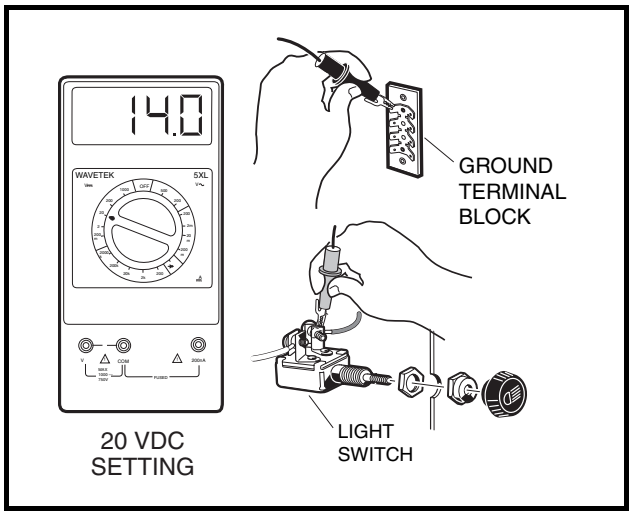

Figure 11-46 Light Switch Test

- **For Turf 6, Carryall 6, TransPorter and Villager vehicles:** Connect the red (+) probe to the light switch terminal with the brown and blue wires connected to it.

- **For Turf 2 vehicles:** Connect the red (+) probe to the light switch terminal with the blue wire connected to it.

⚠ CAUTION

- **Before connecting battery cables, make sure none of the electrical components touch the front body trim or other parts of the vehicle frame. Place a dry towel between the body trim and the center dash to prevent an electrical short.**

4. Connect battery cables, positive (+) cable first, and tighten hardware to 12 ft-lb (16 N·m).

5. With the light switch in the OFF position, the reading should be zero volts. With the light in the ON position, the reading should be between 11 and 12.5 volts. If there is no voltage reading, check continuity of the 10-gauge red wire from the fuse block to the solenoid. Check continuity of the 14-gauge yellow wire from the light switch to the fuse block. Check the fuse. **See Test Procedure 2 – Fuse on page 11-17.** If the wires and fuse show continuity and the readings are still incorrect, replace the switch. **See Headlight Switch Removal, Section 12, Page 12-32.**

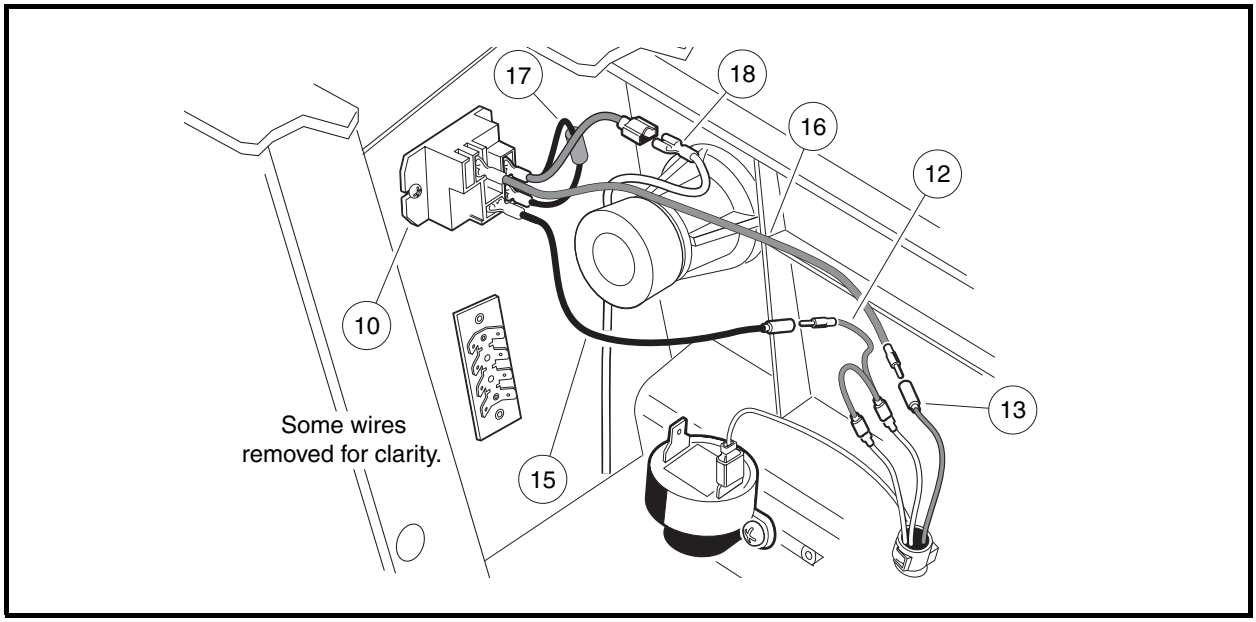

Figure 11-47 Brake Light Relay Test

TEST PROCEDURE 33 – BRAKE LIGHT RELAY

See General Warning, Section 10, Page 10-1.

1. Inspect the brake light relay for proper operation.

NOTE: *The aid of an assistant will be required to inspect the brake light relay for proper operation.*

   1.1. With the key switch in the OFF position and the key removed, press the brake pedal while an assistant observes the brake lights. The brake lights should not function when the key switch is in the OFF position.

   1.2. Insert the key and turn it to the ON position. With the key switch in the ON position, the brake lights should illuminate when the brake pedal is pressed.

   1.3. Set the park brake by pressing the brake pedal firmly and tilting the park brake portion of the pedal forward with your foot. The brake lights should not illuminate with the park brake engaged.

2. If the brake lights operate exactly as described in step 1, the brake light relay is operating correctly.

3. If the brake lights do not illuminate when the key switch is ON and the brake pedal is pressed, proceed to step 7.

4. If the brake lights illuminate when the brake pedal is pressed and the key switch is in the OFF position, the brake light relay has failed closed.

5. Disable the vehicle before performing step 6.

   5.1. Place the Forward/Reverse handle in the NEUTRAL position, and chock the wheels.

   5.2. Disconnect the battery cables as instructed. **See WARNING "To avoid unintentionally starting..." in General Warning, Section 10, Page 10-1.**

   5.3. Remove the center dash assembly. **See step 2 of Key Switch Removal, Section 12, Page 12-13.**

6. Test the relay for the failed closed condition.

   6.1. Remove the voltage suppressor wires (17) from the relay coil terminals **(Figure 11-47, Page 11-44)**.

   6.2. Remove the two wires (15 and 16) from the relay contact terminals.

6.3. Using a multimeter set to 200 ohms, place the black (–) probe of the multimeter on the relay terminal marked COM (common). Place the red (+) probe on the relay terminal marked NO (normally open). The multimeter should indicate no continuity. If the multimeter indicates continuity, the relay has failed closed.

6.4. If the relay has failed closed, replace the relay. **See Brake Light Relay Removal, Section 12, Page 12-33.**

7. Bypass the brake light relay.

7.1. Disable the vehicle before proceeding with step 7.

7.1.1. Place the Forward/Reverse handle in the NEUTRAL position, and chock the wheels.

7.1.2. Disconnect the battery cables as instructed. **See WARNING "To avoid unintentionally starting..." in General Warning, Section 10, Page 10-1.**

7.1.3. Remove the center dash assembly. **See step 2 of Key Switch Removal, Section 12, Page 12-13.**

7.2. Locate the red jumper wire (12) in the area behind the center dash panel **(Figure 11-47, Page 11-44)**.

7.3. Disconnect the red jumper wire (12) from the black wire (15).

7.4. Disconnect the brown wire (16) from the brown wire (13).

7.5. Bypass the relay by connecting the red jumper wire (12) to the brown wire (13) as shown **(Figure 11-47, Page 11-44)**.

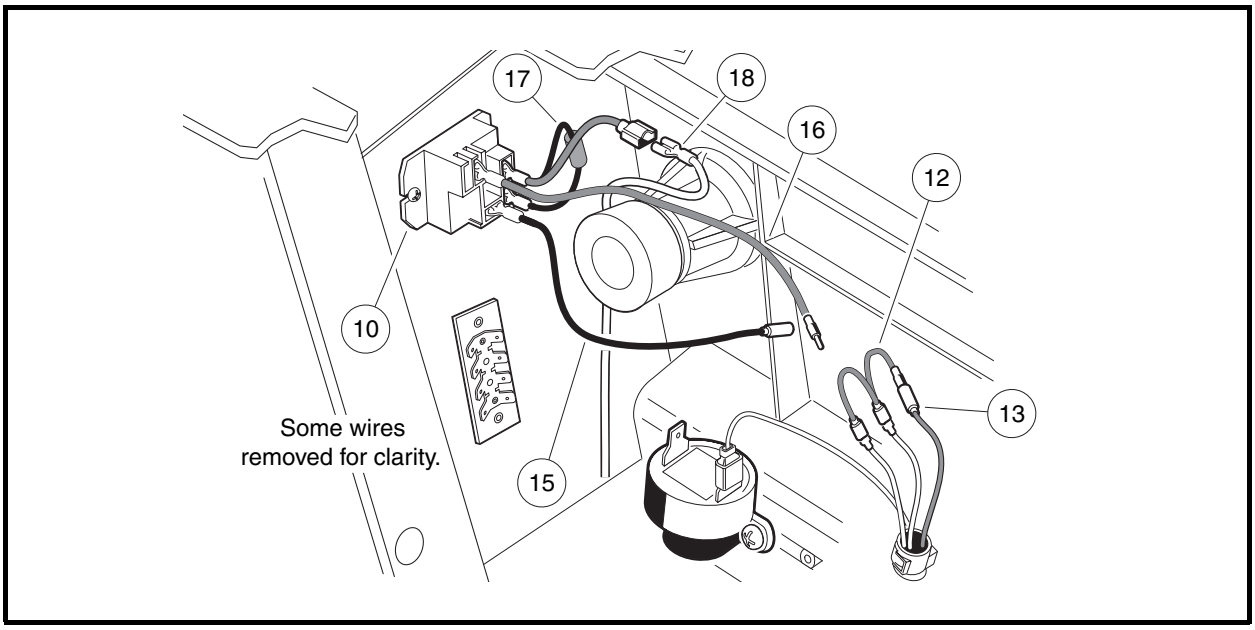

Figure 11-48 Bypassed Brake Light Relay

8. Connect the battery cables, positive (+) cable first, and tighten hardware to 12 ft-lb (16 N·m).

9. With the relay bypassed, inspect the brake lights for proper operation.

NOTE: *The aid of an assistant will be required to inspect the brake light relay for proper operation.*

9.1. With the key switch in the OFF position and the key removed, press the brake pedal while an assistant observes the brake lights. The brake lights should illuminate, regardless of the key switch position (ON or OFF).

Test Procedure 33 – Brake Light Relay, Continued:

10. If the brake lights do not operate with the relay bypassed, there is most-likely a problem in the brake light circuit other than the brake light relay. Restore the wiring to the original configuration (not bypassed), and proceed to step 13 for additional test procedures.

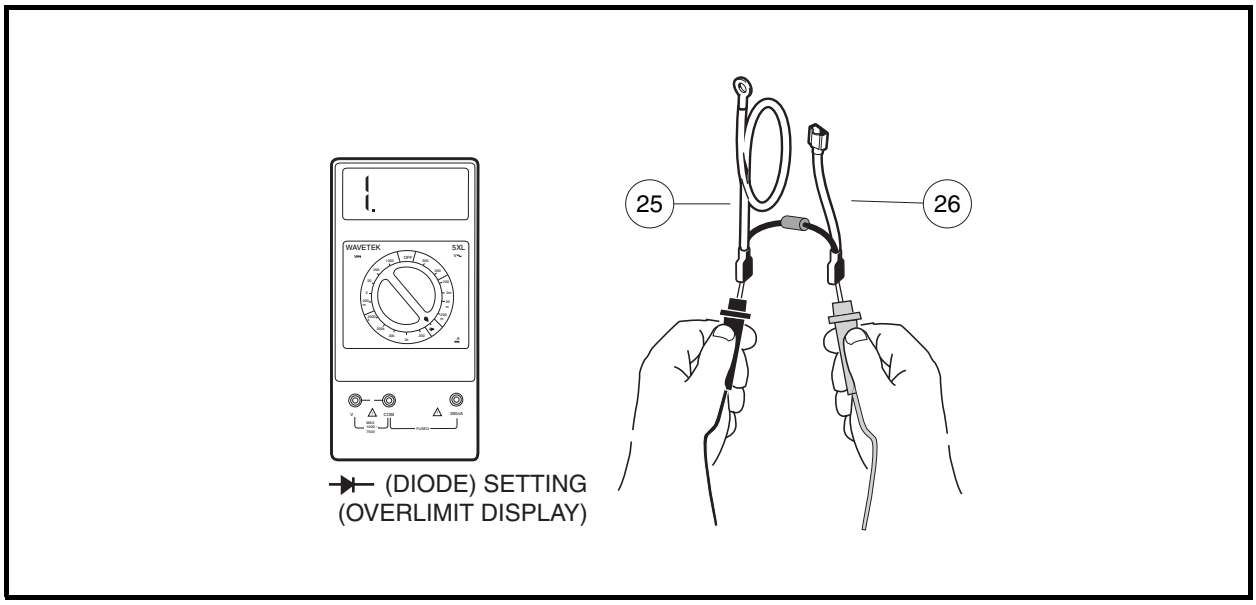

Figure 11-49 Voltage Suppressor Test

11. Test the voltage suppressor wire assembly.

    11.1. Disconnect the voltage suppressor assembly (17) from the relay coil terminals **(Figure 11-47, Page 11-44)**.

    11.2. Using a multimeter set to the diode test function (→|←), place the black (–) probe of the multimeter on the voltage suppressor red wire (25) **(Figure 11-49, Page 11-46)**. Place the red (+) probe on the blue wire (26). The multimeter should indicate an overlimit with no tone emitted.

    11.3. Reverse the multimeter probes and observe the multimeter. The multimeter should continue to indicate an overlimit with no tone emitted.

    11.4. If a tone is emitted (indicating a closed circuit) then the voltage suppressor has failed closed and should be replaced.

12. Test the brake light relay coil.

    12.1. Remove the voltage suppressor wire assembly (17) from the relay (10) coil terminals **(Figure 11-48, Page 11-45)**.

    12.2. Using a multimeter set to 200 ohms, place the black (–) probe of the multimeter on one of the relay coil terminals **(Figure 11-50, Page 11-47)**. Place the red (+) probe on the other relay coil terminal. The coil resistance should be between 139 and 171 ohms. If the reading is incorrect, replace the relay. **See Brake Light Relay Removal, Section 12, Page 12-33.**

    12.3. Restore the wiring to the original configuration (not bypassed).

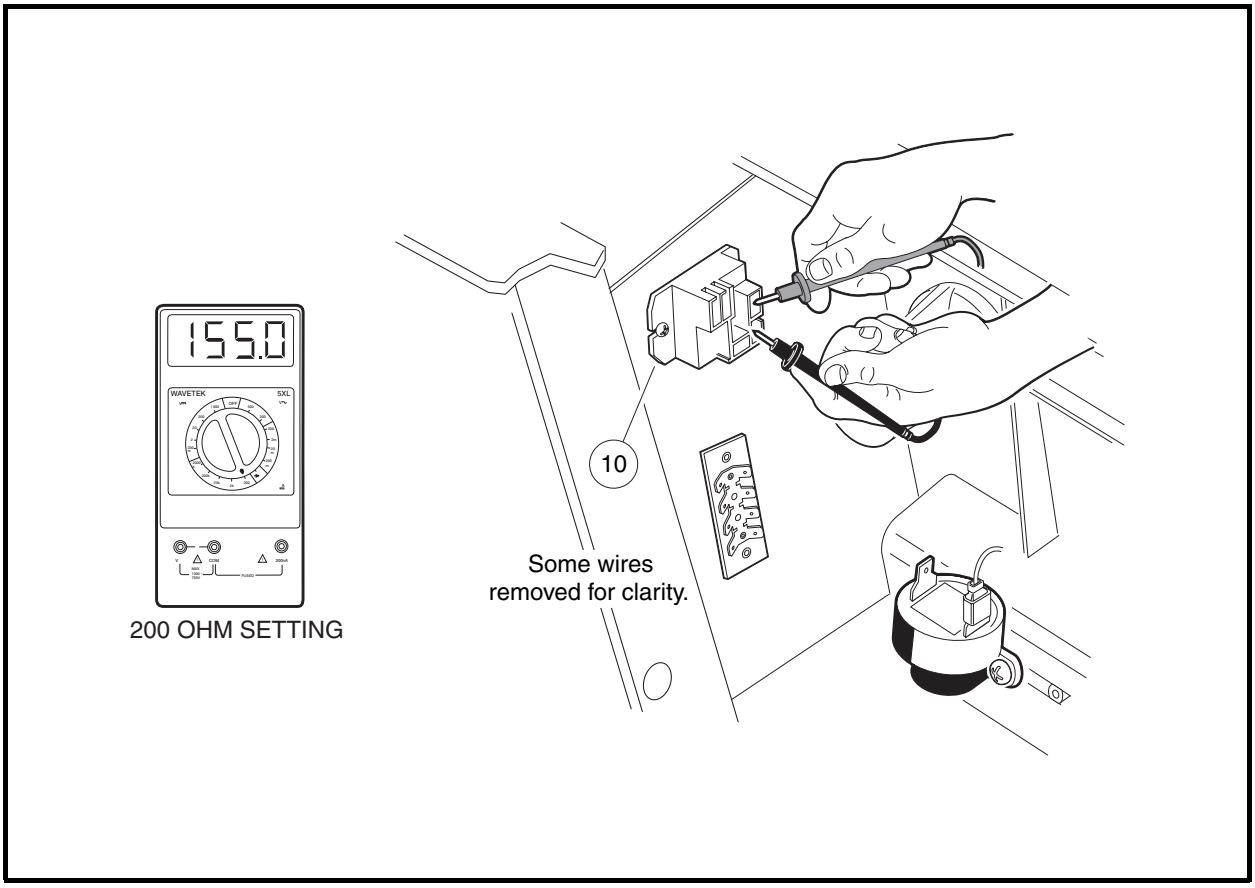

Figure 11-50 Brake Light Relay Coil Test

13. If a problem was not detected in the previous steps, check the following items:

- Battery voltage. **See Test Procedure 1 – Battery on page 11-15.**
- Continuity of all ground terminal block wires. **See Test Procedure 10 – Wire Continuity on page 11-24.**
- Taillight sockets. **See Test Procedure 36 – Taillight Bulb Socket on page 11-49.**
- Check taillight bulbs for continuity.
- Brake pedal limit switch. **See Test Procedure 39 – Brake Pedal Limit Switch on page 11-51.**
- Park brake pedal limit switch. **See Test Procedure 38 – Park Brake Limit Switch on page 11-51.**

For Turf 2 vehicle:

- Check the continuity of the yellow wire from the inline fuse holder to the light switch.
- Check the continuity of the fuse in the inline fuse holder on the yellow wire connected to the large post of the solenoid.

For Turf 6, Carryall 6, TransPorter, Villager 6, and Villager 8 vehicles:

- Check the continuity of the red wire from the fuse block to the large post of the solenoid.
- Check the continuity of the accessory fuse (located in the fuse block).

TEST PROCEDURE 34 – VOLTAGE LIMITER (VEHICLES WITH HEADLIGHTS)

See General Warning, Section 10, Page 10-1.

1. Disconnect the battery cables as instructed. **See WARNING "To avoid unintentionally starting..." in General Warning, Section 10, Page 10-1.**
2. Remove the center dash assembly. **See Key Switch Removal, Section 12, Page 12-13.**
3. Using a multimeter set on 20 volts DC, connect the red (+) probe to the light switch terminal with the yellow wire **(Figure 11-51, Page 11-48)**.
4. Loosen the black wire connector (on the end of the long black wire) at the voltage limiter assembly just enough to maintain the connection and yet expose part of the metal terminal in the connector. Place black (–) probe on the connector **(Figure 11-51, Page 11-48)**. **See following CAUTION.**

⚠ CAUTION

- **Before connecting battery cables, make sure no electrical components touch the front body trim or other parts of the vehicle frame. Place a dry towel between the body trim and the center dash to prevent an electrical short circuit.**

5. Connect battery cables, positive (+) cable first, and tighten hardware to 12 ft-lb (16 N·m).
6. Pull the light switch to the ON position The reading should be 10-12 volts. If the there is no voltage reading, check continuity of the 16-gauge black wire from the headlight to the voltage limiter. Check continuity of the 16-gauge black wire from voltage limiter to the ground terminal block. If the wires show continuity and the readings are still incorrect, replace the voltage limiter. **See Voltage Limiter Removal, Section 12, Page 12-32.**
7. With the neutral lockout cam in the SERVICE (MAINTENANCE) position, start the engine and press the accelerator pedal to the floor.
8. Push the light switch to the OFF position. The reading should be 14.7-15.3 volts.
9. Pull the light switch to the ON position. The reading should be 11-13 volts. If the reading does not drop from 14.5-15.5 volts to 11-13 volts, replace the voltage limiter.

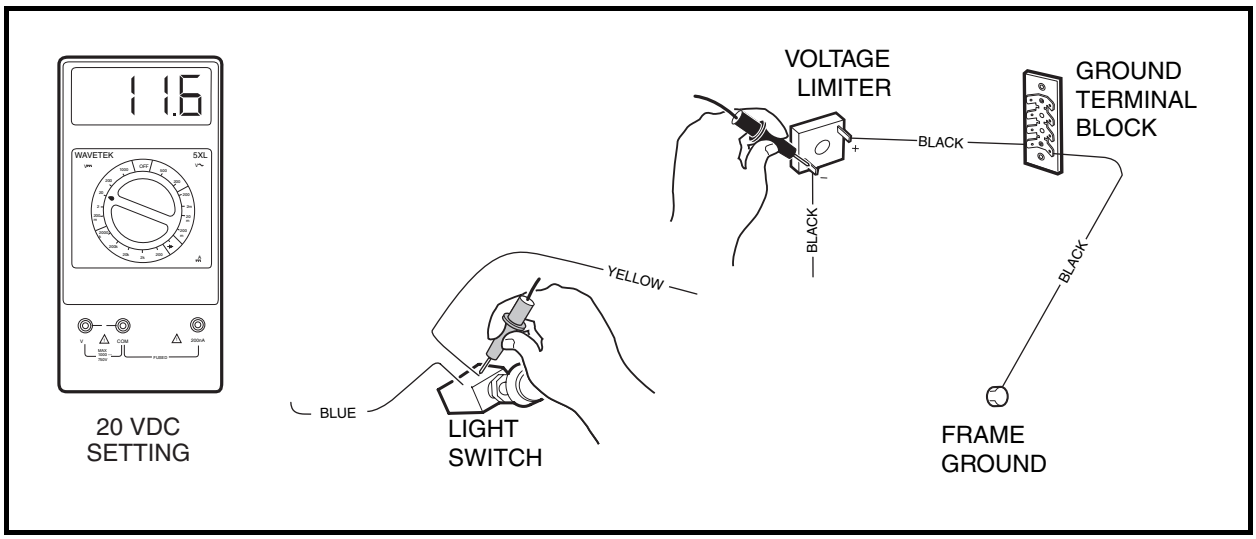

Figure 11-51 Voltage Limiter Circuit Test

TEST PROCEDURE 35 – VOLTAGE AT TAILLIGHT SOCKET

See General Warning, Section 10, Page 10-1.

1. Disconnect the battery cables as instructed. **See WARNING "To avoid unintentionally starting..." in General Warning, Section 10, Page 10-1.**
2. Remove the taillight lens and remove the light bulb from the socket **(Figure 11-52, Page 11-49)**.
3. Using a multimeter set to 20 volts DC, place an alligator clip on the multimeter black probe. Connect the black (–) probe to the ground terminal (where the black wire is attached) on the back of the taillight assembly. **See following CAUTION.**

⚠ CAUTION

- **Do not allow the multimeter probe to touch the wire contact (+) and the metal housing (–) of the light bulb socket assembly at the same time. An electrical short could occur which could blow the fuse or cause wire damage.**

4. To test brake light circuit, place the red probe on wire contact connected to the 18-gauge red wire.
5. To test taillight circuit, place the red probe on wire contact connected to the 18-gauge brown wire.
6. Connect battery cables, positive (+) cable first, and tighten hardware to 12 ft-lb (16 N·m).
7. To test taillights, place light switch in the ON position. The reading should be approximately 12 volts.
8. To test brake lights, place the light switch in the OFF position and press the brake pedal, making sure the park brake is not pressed. The reading should be approximately 12 volts.
9. If the reading is incorrect, check bulb socket and wire continuity.

TEST PROCEDURE 36 – TAILLIGHT BULB SOCKET

See General Warning, Section 10, Page 10-1.

1. Disconnect the battery cables as instructed. **See WARNING "To avoid unintentionally starting..." in General Warning, Section 10, Page 10-1.**
2. Inspect wires at the light bulb socket. Make sure wires are securely fastened to the contacts inside the socket **(Figure 11-52, Page 11-49)**.
3. Inspect the socket housing to make sure there is no corrosion on the contacts or inside the housing.
4. Inspect the light bulb and make sure there is no corrosion on the bulb contacts.

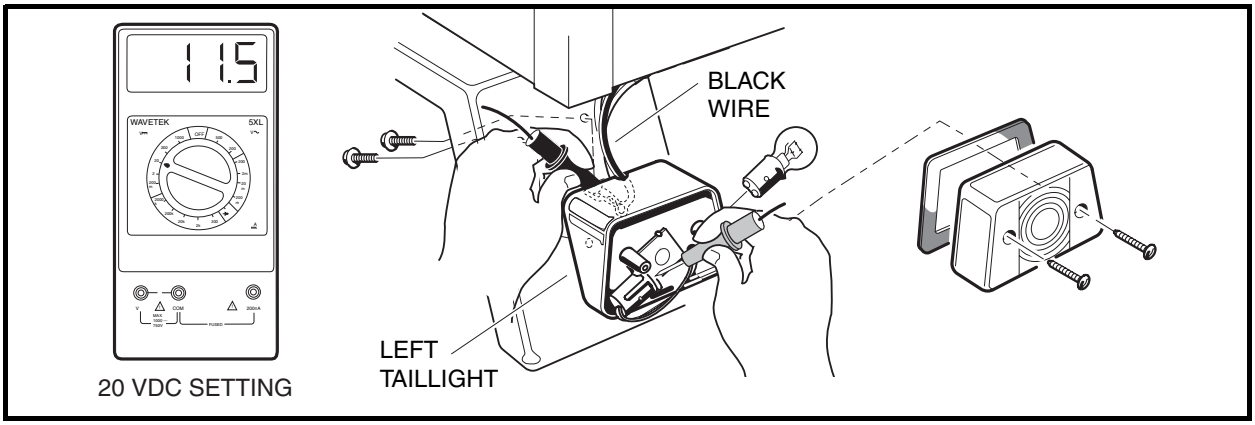

Figure 11-52 Taillight Socket Voltage Test

TEST PROCEDURE 37 – VOLTAGE AT HEADLIGHT SOCKET

See General Warning, Section 10, Page 10-1.

NOTE: *Keep the battery connected while performing this test procedure.*

1. Place the neutral lockout cam in the SERVICE (MAINTENANCE) position, put the Forward/Reverse handle in the NEUTRAL position, and chock the wheels.
2. Inspect wires at the light bulb socket. Make sure wires are securely fastened to the contacts inside socket.
3. Disconnect the wire harness from the headlight **(Figure 11-53, Page 11-50)**.
4. Using a multimeter set to 20 volts DC, place the black (–) probe of multimeter into the black wire terminal of the wiring harness. Place the red (+) probe into the blue wire terminal.
5. Pull the light switch to the ON position. If the multimeter reads approximately 12 volts, replace the headlight bulb.
6. If there is no voltage reading at the wiring harness, check continuity of the 16-gauge blue wire from the headlight to the light switch. Using a multimeter set to 20 volts DC, attach using an alligator clip, the black (–) probe of multimeter onto the negative (–) battery terminal and place the red (+) probe into the blue wire terminal of the wiring harness. If the multimeter reading is approximately 12 volts, the blue wire has continuity.
7. Check continuity of the 16-gauge black wire from the headlight to the ground terminal. Using a multimeter set to 20 volts DC, place the black (–) probe of multimeter into the black wire terminal of the wiring harness and attach using an alligator clip, the red (+) probe onto the positive (+) battery post. If the multimeter reading is approximately 12 volts, the black wire has continuity.

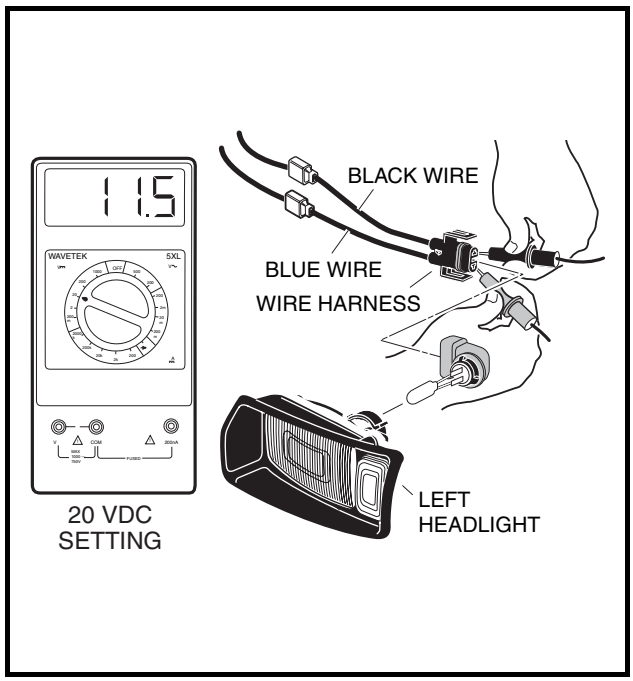

Figure 11-53 Headlight Socket Voltage Test

TEST PROCEDURE 38 – PARK BRAKE LIMIT SWITCH

See General Warning, Section 10, Page 10-1.

1. Disconnect the battery cables as instructed. **See WARNING "To avoid unintentionally starting..." in General Warning, Section 10, Page 10-1.**
2. Using a multimeter set to 200 ohms, place the probes onto the two terminal screws securing the brown and red/white wires to the switch located at the top of brake pedal assembly **(Figure 11-54, Page 11-51)**.
3. With the brake pedal released, the multimeter should indicate continuity.
4. With the brake pedal pressed, the multimeter should indicate no continuity.
5. If the readings are incorrect, replace the limit switch.

TEST PROCEDURE 39 – BRAKE PEDAL LIMIT SWITCH

See General Warning, Section 10, Page 10-1.

1. Disconnect the battery cables as instructed. **See WARNING "To avoid unintentionally starting..." in General Warning, Section 10, Page 10-1.**
2. Using a multimeter set to 200 ohms, and with alligator clips on the multimeter probes, place the probes onto the two terminal screws securing the green/white and red/white wires to the limit switch located under the floorboard **(Figure 11-55, Page 11-51)**.
3. Release the brake. The reading should show no continuity.
4. Press the brake, making sure the park brake is engaged. The reading should show continuity.
5. If the readings are incorrect, check continuity of the 16-gauge orange/white wire from the brake pedal switch to the park brake switch. Check continuity of the 16-gauge green/white wire from the brake pedal switch to the fuse block.
6. If wire continuity is correct and the switch continuity readings are still incorrect, replace the switch. **See Brake Pedal Limit Switch Removal, Section 12, Page 12-35.**

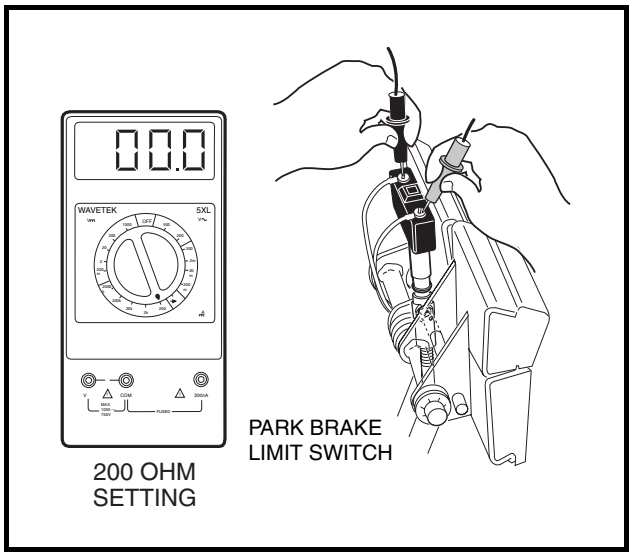

Figure 11-54 Check Park Brake Limit Switch Circuit

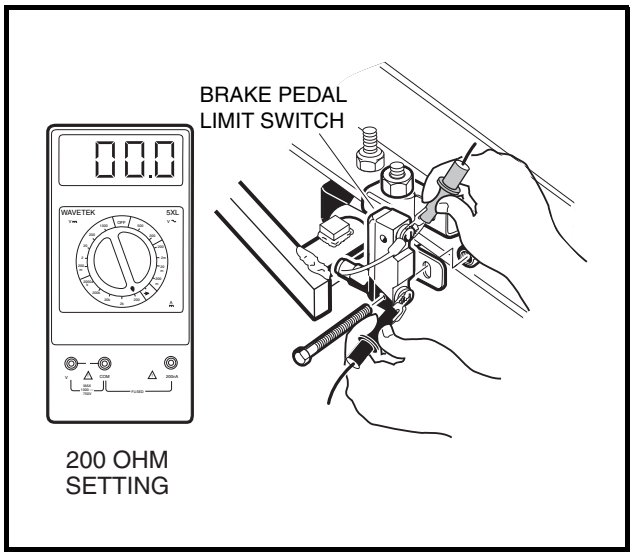

Figure 11-55 Check Brake Pedal Limit Switch Circuit

TEST PROCEDURE 40 – VOLTAGE AT HORN

See General Warning, Section 10, Page 10-1.

1. Disconnect the battery cables as instructed. **See WARNING "To avoid unintentionally starting..." in General Warning, Section 10, Page 10-1.**
2. Remove the center dash assembly. **See Key Switch Removal, Section 12, Page 12-13.**
3. Remove the mounting nut from the front of the horn mounting bracket.
4. Disconnect the 18-gauge orange wire from the horn terminal and remove the 18-gauge black wire from the horn mounting stud.
5. Using a multimeter set on 20 volts DC, place an alligator clip on the black (–) probe. Connect the black (–) probe to the 18-gauge black wire ring terminal. Place the red (+) probe into the spade terminal on the orange wire **(Figure 11-56, Page 11-52)**. **See following CAUTION.**

⚠ CAUTION

- **Before connecting battery cables, make sure no terminal ends or probes touch each other, the front body trim, or other parts of the vehicle frame. If they do, it could blow the fuse or cause wire damage.**

6. Connect battery cables, positive (+) cable first, and tighten hardware to 12 ft-lb (16 N·m).
7. The reading should be zero volts.
8. Press the horn button. The reading should be approximately 12 volts.
9. If the readings are incorrect, check the continuity of the wires, the horn button, and fuse. If the readings are correct, replace the horn.

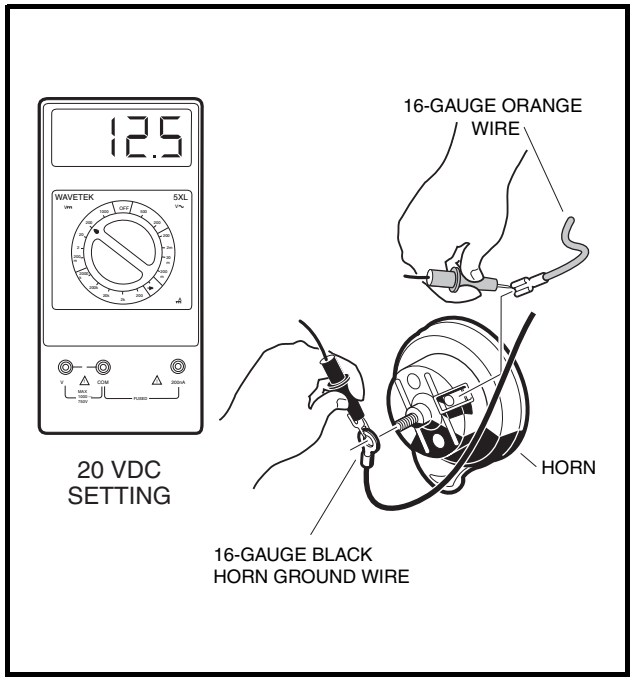

Figure 11-56 Horn Circuit Test

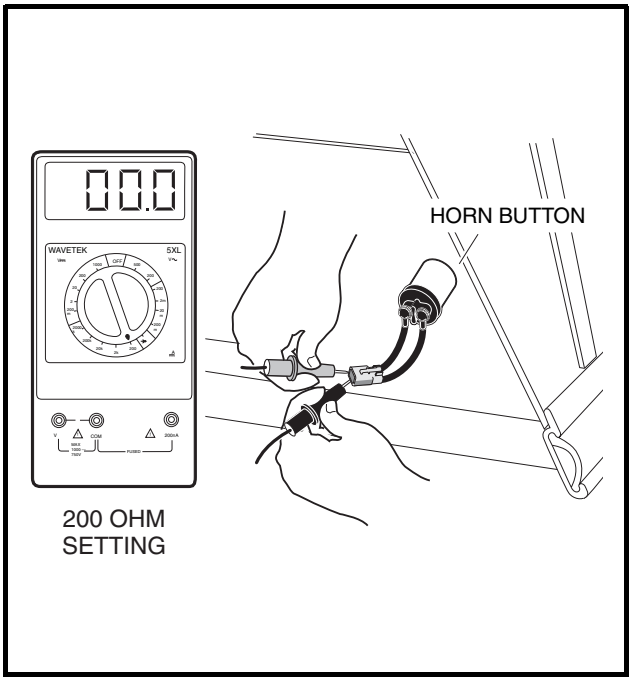

Figure 11-57 Horn Button Test

TEST PROCEDURE 41 – HORN SWITCH

See General Warning, Section 10, Page 10-1.

1. Disconnect the battery cables as instructed. **See WARNING "To avoid unintentionally starting..." in General Warning, Section 10, Page 10-1.**
2. Disconnect the orange and red/white wires at the horn button from the wire harness.
3. Using a multimeter set to 200 ohms, place the probes into the two terminal plug holes on the horn harness **(Figure 11-57, Page 11-52)**.
4. The reading should show no continuity. With the horn button pressed, the reading should show continuity.
5. If the readings are incorrect, replace the horn button.

SECTION 12 – ELECTRICAL COMPONENTS

⚠ DANGER

- **See General Warning, Section 10, Page 10-1.**

⚠ WARNING

- **See General Warning, Section 10, Page 10-1.**

STARTER/GENERATOR

See General Warning, Section 10, Page 10-1.

Testing the Starter/Generator

See Section 11, Test Procedure 9 – Starter/Generator (Starter Function) on page 11-23 and Test Procedure 11 – Starter/Generator (Generator Function) on page 11-25.

Starter/Generator Removal

1. Disconnect the battery cables as instructed. **See WARNING "To avoid unintentionally starting..." in General Warning, Section 10, Page 10-1.**
2. Place the neutral lockout cam in the SERVICE (MAINTENANCE) position. Access the engine compartment by removing the bed, tilting the bed, or removing the seat.
3. Disconnect the wires from the starter/generator (1). Mark wires before disconnecting. Loosen the pivot nuts (7) and bolts (5) **(Figure 12-1, Page 12-1)**.

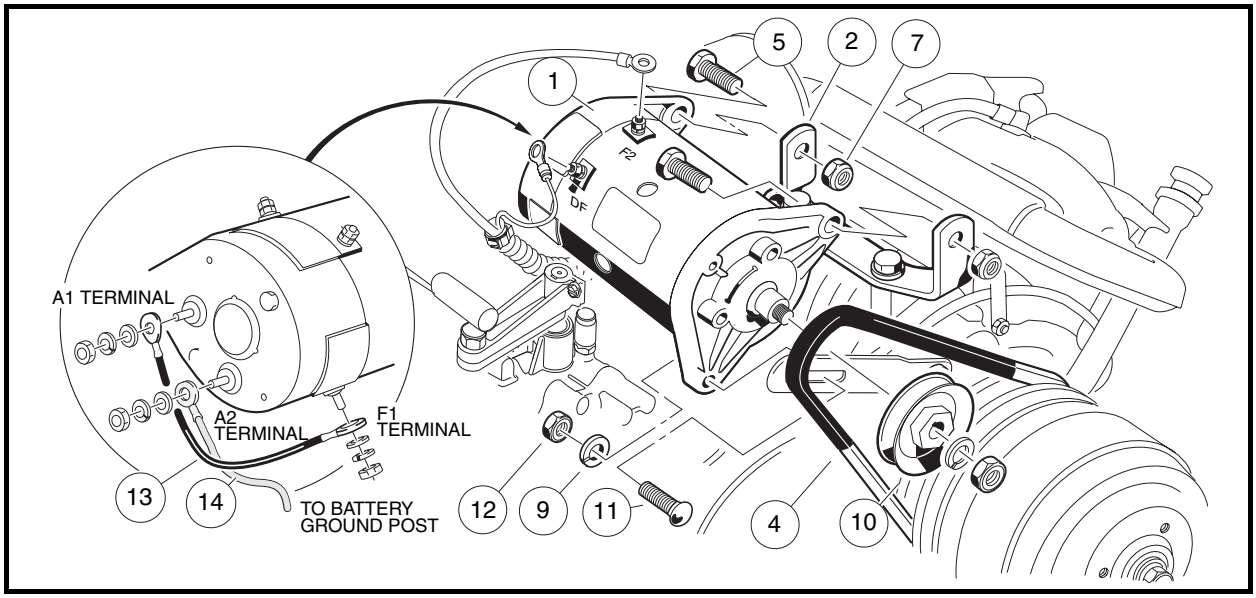

Figure 12-1 Starter/Generator Removal

Starter/Generator Removal, Continued:

4. Remove the mounting/adjustment nut (12), washer (9) and bolt (11). Lower the starter/generator and remove the belt (4) from the pulley (10).

5. Support the starter/generator so that when the pivot bolts are removed the starter/generator will not fall to the ground. Remove the two pivot nuts (7) and bolts (5) from the mounting bracket.

6. Remove the starter/generator.

Disassembly of the Starter/Generator to Service the Brushes

1. Remove the two bolts (20) and pull commutator end cover (23) free of starter/generator housing (24) **(Figure 12-2, Page 12-2)**. **See following NOTE.**

NOTE: *If the brushes are not removed, contact between the brushes and commutator as the commutator end cover is being removed or installed could damage the brushes. Lift the brush springs out of the notches in the brushes and pull the brushes back from the center of the commutator end cover. The springs will rest on the sides of the brushes and help prevent them from sliding towards the center of the cover* ***(Figure 12-6, Page 12-4)****.*

2. Remove brush covers (29 and 30), screws (25) and lock washers (26), brush springs (28), and brushes (27) **(Figure 12-3, Page 12-2)**. **See following NOTE.**

NOTE: *To clean and inspect the armature/commutator and the bearings,* ***See Disassembly of the Starter/Generator to Service the Armature/Commutator on page 12-4.***

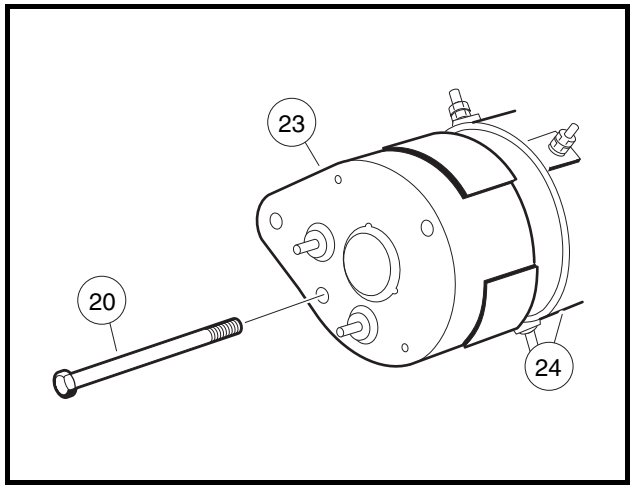

Figure 12-2 Commutator End Cover

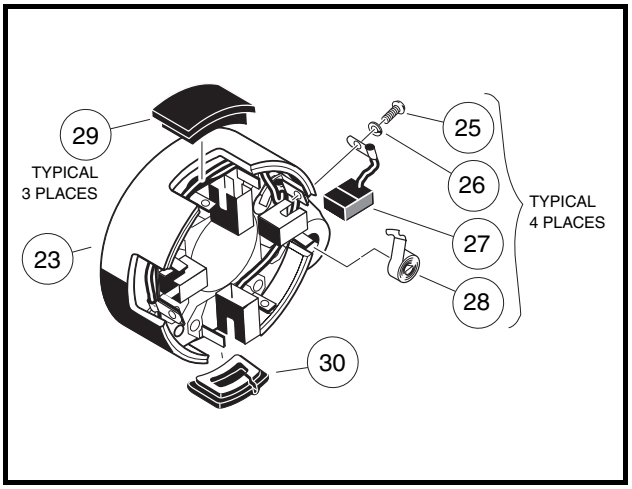

Figure 12-3 Brush Covers and Brushes

Brush Inspection and Replacement

1. Visually inspect brushes. Replace brushes that are cracked or severely chipped.

2. Check the wear line on the side of the brush. If the end of the brush is within 1/16 inch (1.6 mm) of the wear line, replace all four brushes **(Figure 12-4, Page 12-3).**

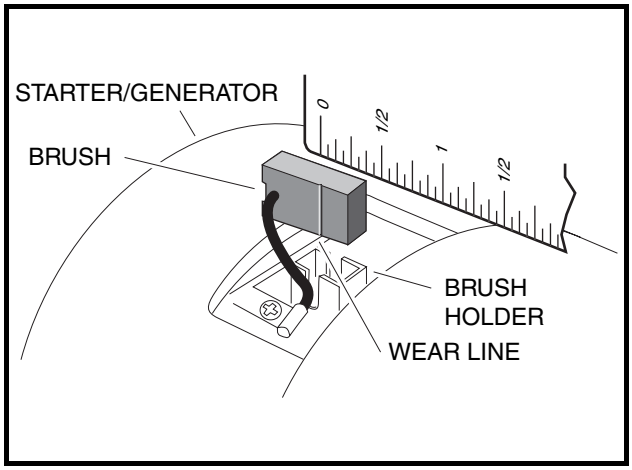

Figure 12-4 Inspect Brushes

Brush Spring Inspection and Replacement

1. Visually inspect springs. Replace all four springs if any spring is discolored from heat (straw or bluish in color).
2. Install the four brushes (27) into their holders and insert the four brush springs (28) **(Figure 12-3, Page 12-2)**. Using a spring scale, test brush spring tension. If any spring has a tension less than 24 ounces (6.67 N), replace all four springs **(Figure 12-5, Page 12-3)**. **See following CAUTION.**

⚠ CAUTION

- **When checking brush spring tension, do not push springs beyond the point they would normally be if there were new brushes installed. Exerting excessive force or pushing brush springs beyond their normal maximum extension point will damage springs.**

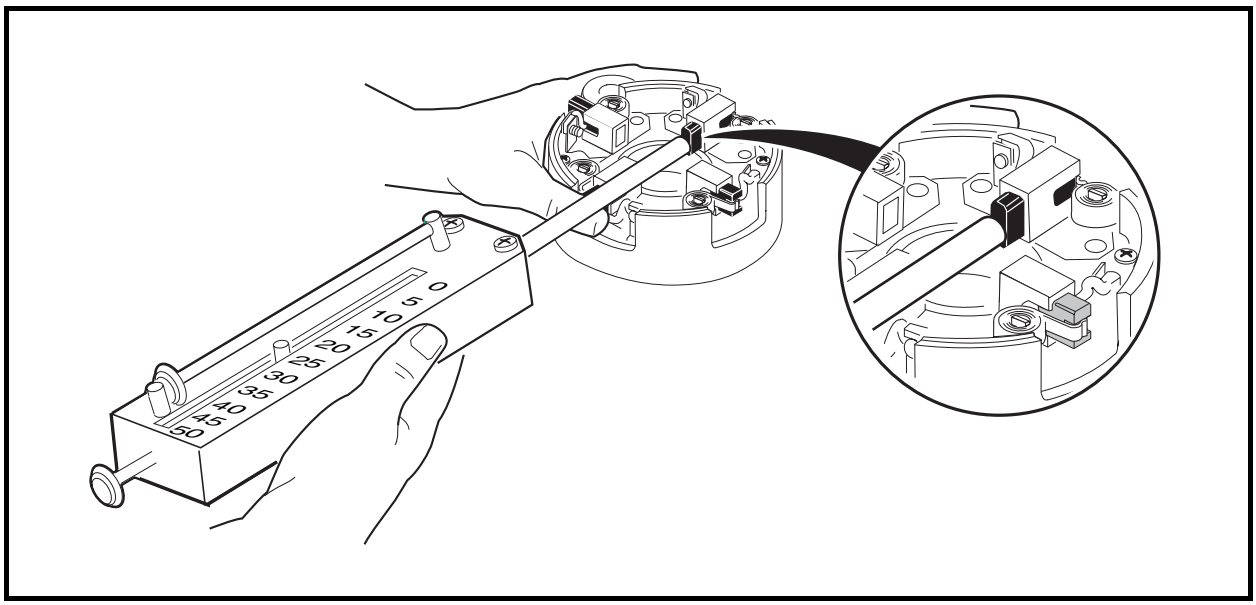

Figure 12-5 Brush Spring Tension Test

Starter/Generator Assembly

1. Connect the brush wires to the holders using four lock washers (26) and four screws (25), making sure the crossover leads are connected also. Tighten the screws to 31 in-lb (3.5 N·m) **(Figure 12-3, Page 12-2)**.
2. To prevent contact between the brushes and commutator as the commutator is installed, and possible damage to the brushes, lift the brush springs out of the notches in the brushes and pull the brushes back from the center of the commutator end cover. The springs will rest on the sides of the brushes and help prevent them from sliding towards the center of the cover **(Figure 12-6, Page 12-4)**.
3. Install the commutator end cover (23) onto the armature shaft. Align the locating pin with the pin hole in the cover. Install two M6 x 180 mm bolts (20) and tighten to 100 in-lb (11.3 N·m) **(Figure 12-2, Page 12-2)**.
4. Push the brushes down into the holders. Position springs into the notches in the brushes. Install the brush cover (30) that has the drain hole in it next to the A2 terminal. Install the remaining three brush covers (29) in the openings in the commutator end cover (23) **(Figure 12-3, Page 12-2)**.

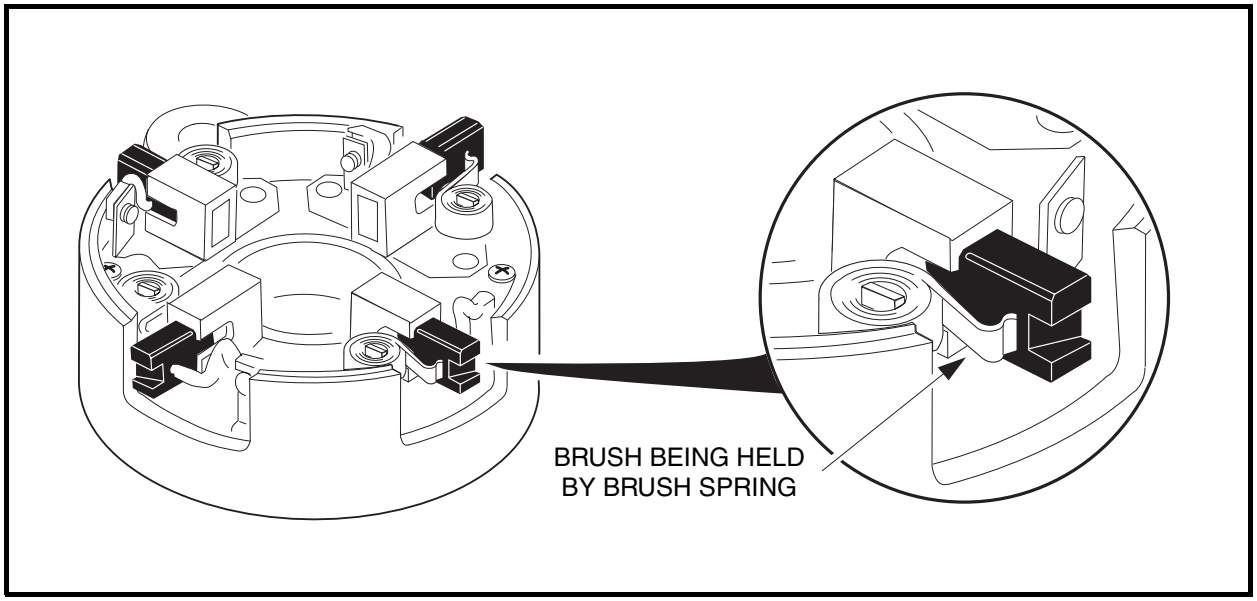

Figure 12-6 Pull Brushes Away from Center of the Commutator End Cover

Disassembly of the Starter/Generator to Service the Armature/Commutator

1. If the brushes are not removed, contact between the brushes and commutator as the commutator end cover is being removed or installed could damage the brushes.
   1.1. Lift the brush springs out of the notches in the brushes and pull the brushes back from the center of the commutator end cover. The springs will rest on the sides of the brushes and help prevent them from sliding towards the center of the cover **(Figure 12-6, Page 12-4)**.
2. Remove the two bolts (20), and pull commutator end cover (23) free of the starter/generator housing (24) **(Figure 12-2, Page 12-2)**.
3. To separate armature (33) from output end cover (36), remove nut (41), lock washer (40), pulley (39), shaft key (34), spacer (37), and bearing retainer screws (43) **(Figure 12-7, Page 12-5)**.

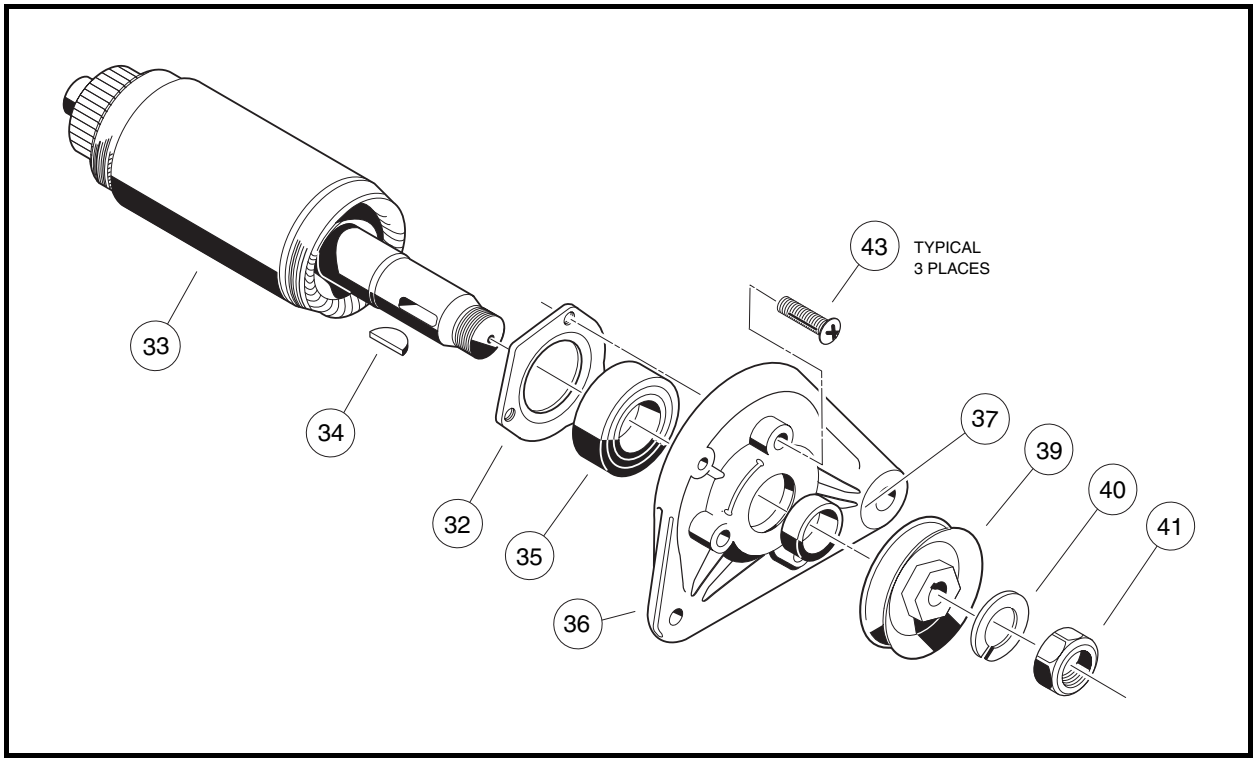

Figure 12-7 Armature and Output End Cover Assembly

Bearing Cleaning and Inspection

1. Using a clean cloth, wipe the carbon dust from the two bearings. Inspect bearings by spinning them by hand and checking for both axial (A) and radial (B) play **(Figure 12-8, Page 12-5)**.

2. Replace the bearing if it is noisy, does not spin smoothly, or has excessive play. Check the bearings and replace if rusted, worn, cracked, or if there is an abnormal color change in the metal of the bearing. Bearings should be replaced if there is extensive wear or pitting on the balls or on the rolling surfaces. Do not remove the bearings unless they are to be replaced.

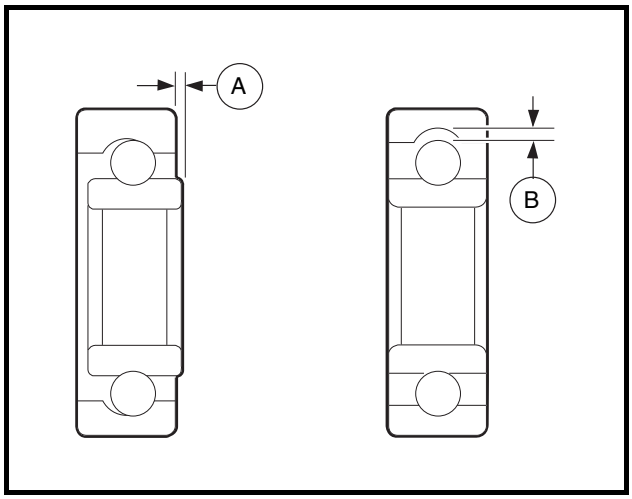

Figure 12-8 Bearing Play Inspection

Bearing Removal

1. Place the wedge attachment tool (CCI P/N 1012812) between the bearing and the armature. Make sure the wedge attachment tool is supporting the inner race of the bearing. If a press is not available, secure a bearing puller (CCI P/N 1012811) to the wedge attachment tool and pull the bearing off of the end of the armature shaft. Support the armature so that it will not drop when the bearing is removed **(Figure 12-9, Page 12-6)**.
2. Discard the bearings.
3. Slide the bearing retainer (32) off of the output end of the shaft **(Figure 12-7, Page 12-5)**.

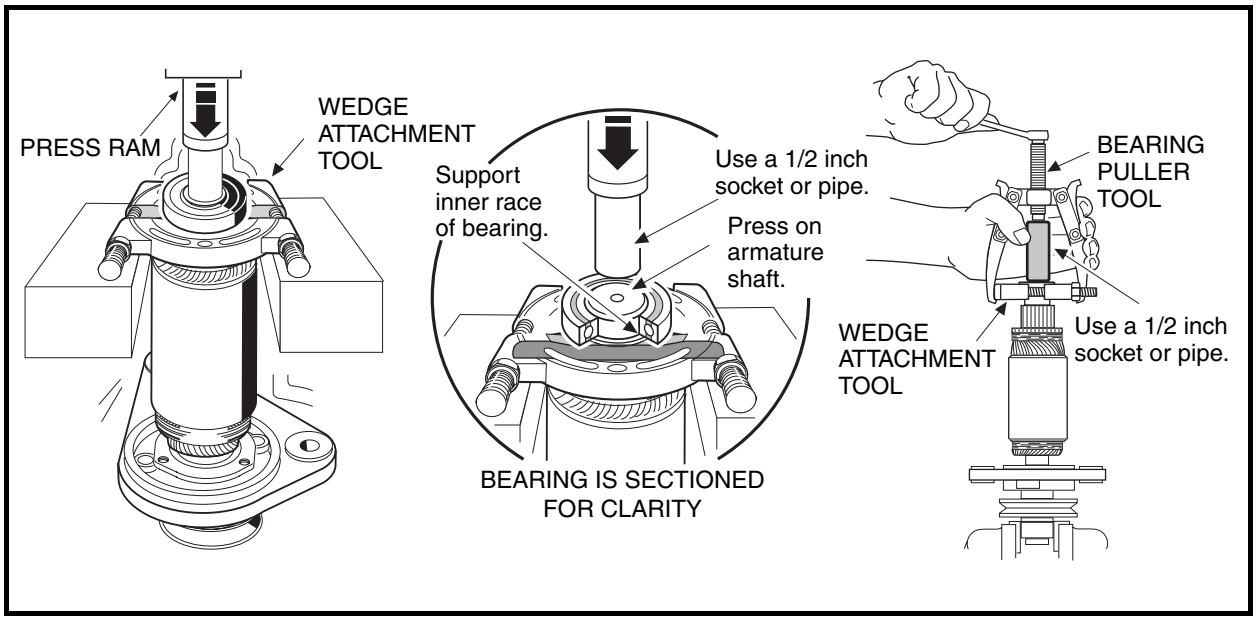

Figure 12-9 Bearing Removal

Field Coil Removal

1. Remove the retaining nut from each field coil terminal and slide the insulator out of the slots in the housing. Remove the four pole piece screws from the housing. Remove the four pole pieces from inside the housing. Remove the field coils from the inside of the housing **(Figure 12-10, Page 12-7)**. **See following NOTE.**

NOTE: *Do not remove the insulators or the field coils unless an electrical test indicates that it is necessary* ***(Figure 12-10, Page 12-7). See Test Procedure 9, Section 11, Page 11-23.***

Visual Inspection of Armature

Obvious defects can be seen by examining the armature. If an armature has frayed or charred insulation, broken wires or thrown solder, it is obvious without testing that it should be replaced. Faults seen during the visual inspection can aid in diagnosing the original cause of the failure. Items to look for are listed below.

- Burned, charred, or cracked insulation
- Improperly cured varnish
- Thrown solder
- Flared armature windings

- Worn, burned, or glazed commutator
- Loose or raised commutator bars
- Bruised or damaged armature core laminations
- Worn armature bearing or shaft
- Dirty or oily commutator

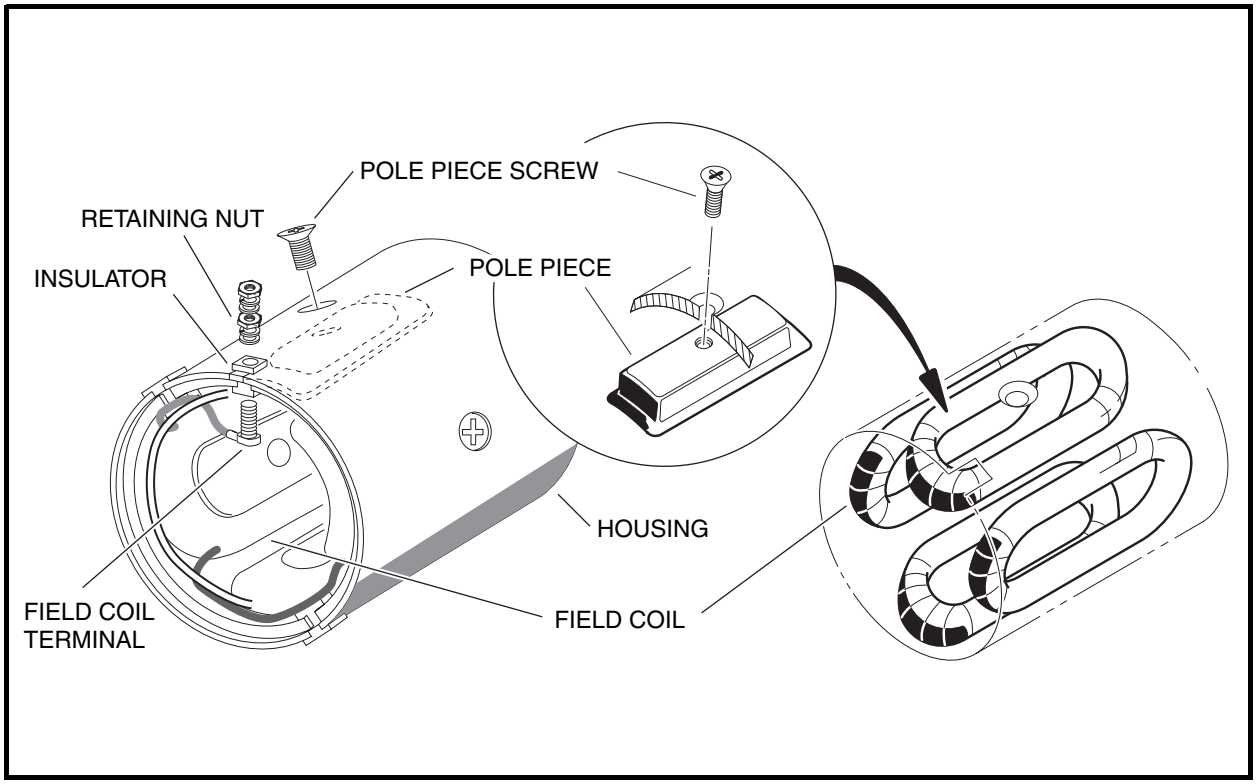

Figure 12-10 Field Coil Assembly

Commutator Cleaning and Inspection

1. Clean the carbon dust, dirt and oil from the commutator. Visually inspect the commutator for worn, burned or glazed areas. Check for loose or raised commutator bars. Slight roughness of the commutator can be polished away with 400 grit (or finer) sandpaper. **See following CAUTION**.

⚠ CAUTION

- **Do not use emery cloth on the commutator. Particles of emery are conductive and may short-circuit the commutator bars. Do not use oil or lubricants on the commutator or brushes.**

2. Using a micrometer, measure the outside diameter at two points along the commutator. If the commutator outside diameter is less than 1.535 inches (39 mm), replace the armature and bearings **(Figure 12-11, Page 12-8)**.

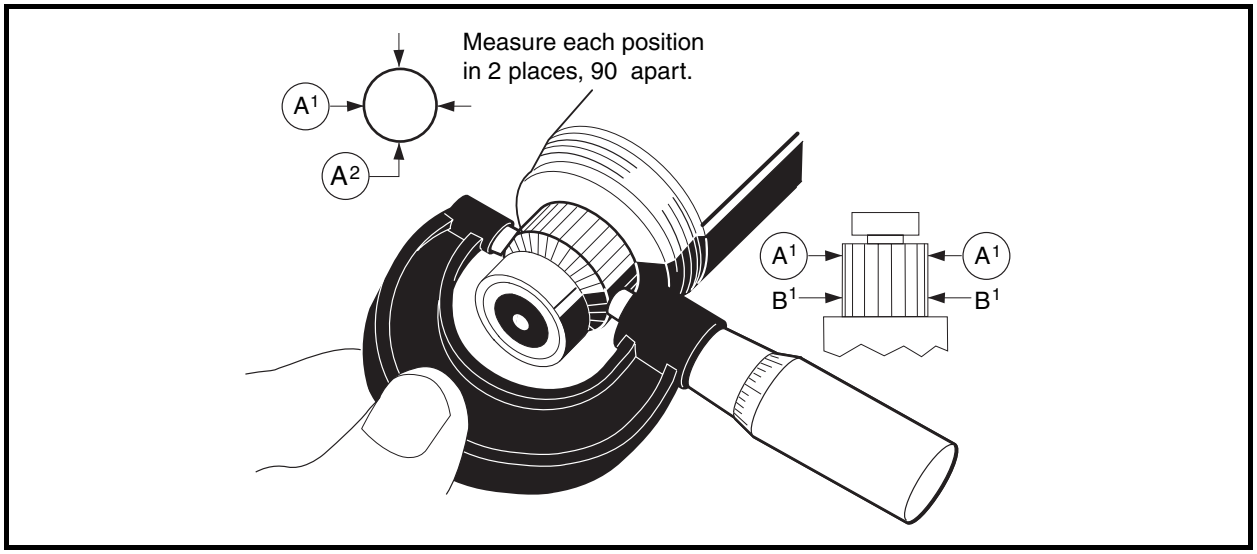

Figure 12-11 Inspect Commutator

Armature Ground Test

⚠ CAUTION

- **Do not submerge armature in solvent.**

NOTE: *Before testing, wipe the armature with a clean cloth and remove carbon dust and metal particles from between commutator bars.*

1. Using a multimeter set on 200 ohms, place the positive (+) probe on the commutator bars and the negative (–) probe on the armature core. The reading should be no continuity. If the reading is incorrect, replace the armature and the two bearings **(Figure 12-12, Page 12-8)**.

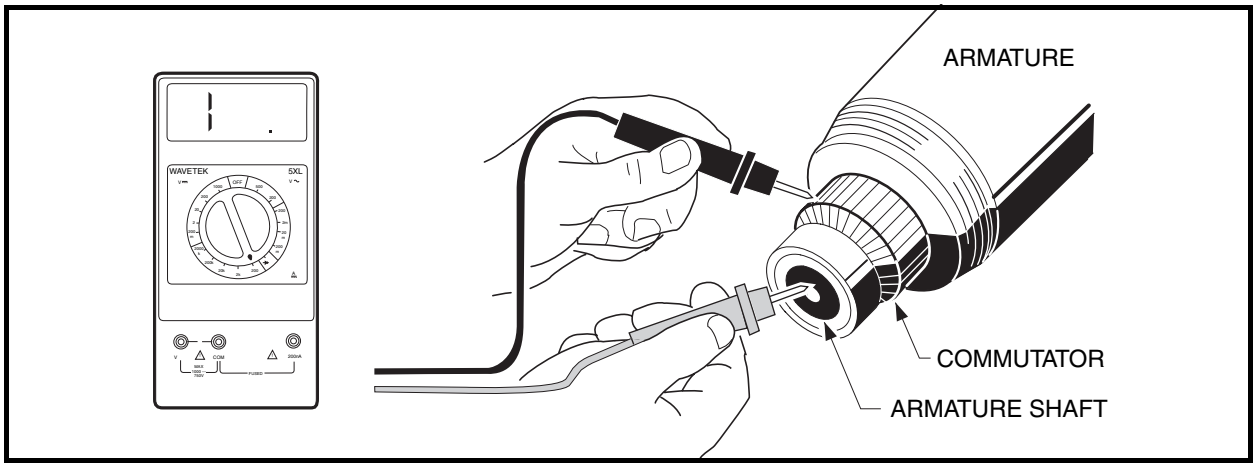

Figure 12-12 Armature Ground Test

Visual Inspection of Field Coils

If the insulation on the field coils appears blackened or charred, the serviceability of the coils is questionable. Burned or scorched coil insulation indicates the starter/generator has overheated due to overloads or grounded or shorted coil windings. Be sure the insulators are tight in the housing.

Starter/Generator Rework

Any rework must be performed by a qualified technician. Starter/Generator service specifications are listed in the following table.

ITEM	SERVICE LIMIT
Commutator diameter (minimum)	1.535 in. (39 mm)
Concentric with armature shaft within	0.002 in. (0.051 mm)
Limit depth of cut when machining commutator	0.007 in. (0.2 mm)
If undercut of segment insulator is less than 0.016 inch (0.406 mm), then it should be undercut to:	0.031 in. (0.8 mm)
Dielectric strength	500 VAC for one minute
Armature insulation resistance	0.2M ohms at 500 VDC
Starter field coil resistance	0.006-0.01 ohms
Generator field coil resistance	4.5-5.5 ohms

Starter/Generator Assembly

1. Place the field coil into the housing. The two insulators that look alike fit into the slots next to the F1 and F2 markings on the outside of the housing. The insulator that looks different slides into the slot next to the DF marking.

2. After the insulators are seated in the slots, install the threaded terminals through the wire connectors and then through the insulators. Install a flat washer, lock washer and nut onto each threaded terminal on the outside of the housing. Tighten nuts to 47.5 in-lb (5.4 N·m) **(Figure 12-10, Page 12-7)**.

⚠ CAUTION

- **Route the field terminal wires so that they will not contact the armature.**

3. Install the four pole pieces into the housing. Use the four screws to secure pole pieces to the inside of the housing to retain the field wires. Tighten screws to 9 ft-lb (12.2 N·m) **(Figure 12-10, Page 12-7)**.

4. Slide the bearing retainer onto the output end of the armature shaft (33) so that it will hold the outside of the bearing (35) only.

5. Press a new ball bearing (35) onto the output end of the armature **(Figure 12-7, Page 12-5)**. Press a new ball bearing onto the commutator end of the armature shaft. **See following CAUTION.**

Starter/Generator Assembly, Continued:

⚠ CAUTION

- **To prevent damage to the retainer, use care while pressing new bearing onto the output end of the shaft.**
- **Press against the inner race of the new bearing until it is fully seated.**

6. Install the output end cover (36) onto the armature. Secure the bearing retainer (32) to the cover and tighten the screws (43) to 39 in-lb (4.4 N·m) **(Figure 12-7, Page 12-5)**.
7. Slide the housing with field coils over the armature. Use the locating pin to align housing to the cover.

NOTE: *The terminal insulators should be on the commutator end of the housing.*

8. To prevent contact between the brushes and commutator as the commutator cover is installed, and possible damage to the brushes, lift the brush springs out of the notches in the brushes and pull the brushes back from the center of the commutator end cover. The springs will rest on the sides of the brushes and help prevent them from sliding towards the center of the cover **(Figure 12-6, Page 12-4)**.
9. Install the commutator end cover (23) onto the armature shaft. Align the locating pin with the pin hole in the cover. Install the two M6 x 180 mm bolts (20), and tighten to 100 in-lb (11.3 N·m) **(Figure 12-2, Page 12-2)**.
10. Push the brushes down into the holders. Place springs into the notches in the brushes. Install the brush cover (30) that has the drain hole in it next to the A2 terminal. Install the remaining three brush covers (29) in the openings in the commutator end cover (23) **(Figure 12-3, Page 12-2)**.
11. Slide the spacer (37) onto the end of the shaft. Insert the shaft key (34) into the shaft. Install the belt pulley (39) onto the shaft, and install the lock washer (40) and M14 nut (41). Tighten the nut to 28 ft-lb (38.0 N·m) **(Figure 12-7, Page 12-5)**.

Starter/Generator Installation

1. Install the green wire from the F1 terminal to the A1 terminal on the starter/generator **(Figure 12-1, Page 12-1)**. Install a flat washer, lock washer, and nut onto each terminal and tighten to 48 in-lb (5.4 N·m).
2. Install two 3/8-inch hex-head pivot bolts (5) into the mounting bracket with the heads of the bolts facing toward the driver-side of the vehicle. Position the starter/generator in the mounting bracket so that the bolts will go through the starter/generator before going through the bracket. Install a lock nut (7) onto each bolt. Tighten to finger tight **(Figure 12-13, Page 12-11)**.
3. Install the adjustment bolt (11) through the adjusting bracket (4) and then through the starter/generator. Install a lock washer (9) and 5/16-inch nut (12) onto the end of the adjustment bolt (11). Tighten to finger tight **(Figure 12-13, Page 12-11)**.
4. Install the belt (3), then tighten the mounting bolts. **See Belt Tension Adjustment on page 12-11.**
5. Connect the yellow wire from the voltage regulator to the DF terminal on the starter/generator. Install a flat washer, lock washer, and nut onto the terminal. Tighten the nut to 31 in-lb (3.5 N·m).
6. Install the white wire from the solenoid to the F2 terminal on the starter/generator. Install the black wire from the frame to the A2 terminal on the starter/generator. Install a flat washer, lock washer and nut onto each terminal, and tighten the nut to 48 in-lb (5.4 N·m).
7. Connect battery cables, positive (+) cable first, and tighten hardware to 12 ft-lb (16 N·m). **See Figure 10-1, Section 10, Page 10-3.** Coat terminals with Battery Terminal Protector Spray (CCI P/N 1014305) to minimize corrosion.

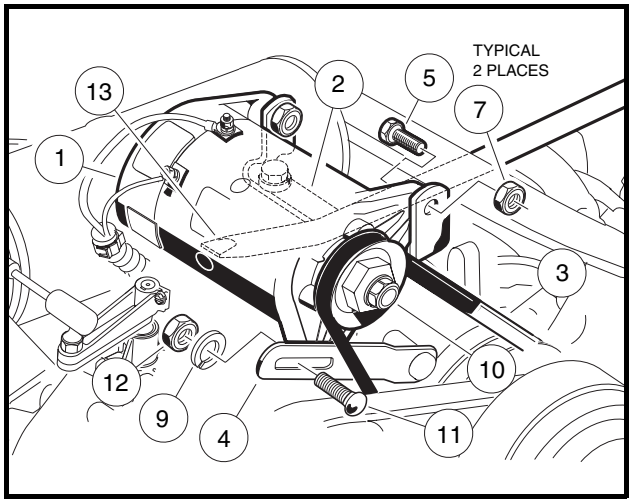

Figure 12-13 Starter/Generator Installation

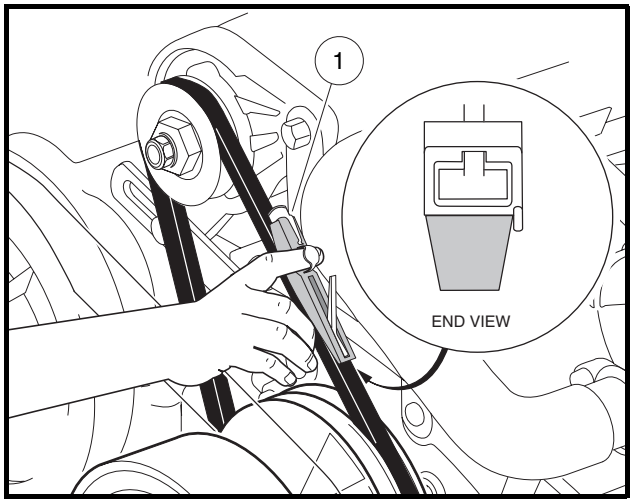

Figure 12-14 Belt Tension Gauge

Belt Tension Adjustment

Belt tension should be checked periodically. If the belt slips when starter/generator motor operates, adjust belt to correct tension.

1. Disconnect the battery cables as instructed. **See WARNING "To avoid unintentionally starting..." in General Warning, Section 10, Page 10-1.**
2. Access engine compartment.
   - **For Turf 2, Carryall 2 or Carryall 2 Plus:** Tilt the bed and engage prop rod.
   - **For Carryall 6 or TransPorter 4:** Remove the bed.
   - **For Villager 6 or 8:** Remove the seat.
3. Make sure the two pivot bolts (5) on the mounting bracket are finger tight. The carriage bolt (11) and hex nut (12) are to be finger tight also **(Figure 12-13, Page 12-11)**.
4. Push the starter/generator down so it is at the lowest point of its adjustment travel. With the starter/generator belt in place around the drive clutch pulley, install the starter/generator belt (3) around the pulley (10) on the end of the starter/generator.
5. Position a pry bar (13) between the top of the starter/generator mounting bracket (2) and the underside of the starter/generator by passing the pry bar under the exhaust header.
6. While holding the pry bar, measure the belt tension using a Krikit® gauge (1) (available at NAPA® Auto Parts stores), or equivalent. Proper tension for a new starter/generator belt should be 75 ft-lb (101.7 N·m) or 45 ft-lb (61 N·m) for an existing belt **(Figure 12-14, Page 12-11)**.
7. While maintaining the tension, tighten the adjustment nut (12) to 12 ft-lb (16.3 N·m). Tighten the two pivot bolts (5) and hex nuts (7) to 23 ft-lb (31.2 N·m) **(Figure 12-13, Page 12-11)**. **See following CAUTION.**

⚠ CAUTION

- **Remove pry bar before starting engine.**

8. Connect battery cables, positive (+) cable first, and tighten hardware to 12 ft-lb (16 N·m). **See Figure 10-1, Section 10, Page 10-3.** Coat terminals with Battery Terminal Protector Spray (CCI P/N 1014305) to minimize corrosion.

VOLTAGE REGULATOR

See General Warning, Section 10, Page 10-1.

Testing the Voltage Regulator

See Test Procedure 12, Section 11, Page 11-25.

Voltage Regulator Removal

1. Disconnect the battery cables as instructed. **See WARNING "To avoid unintentionally starting..." in General Warning, Section 10, Page 10-1.**
2. Remove the electrical component box cover.
3. Disconnect all wires as indicated:

- **Pedal-Start vehicles:** Disconnect the voltage regulator red wire (1) at the large post on the solenoid, the yellow wire (4) at the bullet connector, and the black wire (7) from the (NO) terminal of the kill limit switch and at the battery frame ground **(Figure 12-15, Page 12-12)**.
- **Key-Start vehicles:** Disconnect the voltage regulator red wire (1) at the large post on the solenoid, the white wire (2) and blue wire (3) at the small post on the solenoid, the yellow wire (4) at the bullet connector, the two black wires (5) and (6) at the (NC) and (COIL) terminals respectively on the relay, and the black wire (7) at the battery frame ground **(Figure 12-16, Page 12-12)**.

4. Remove the voltage regulator mounting screw (8) and remove the voltage regulator (9).

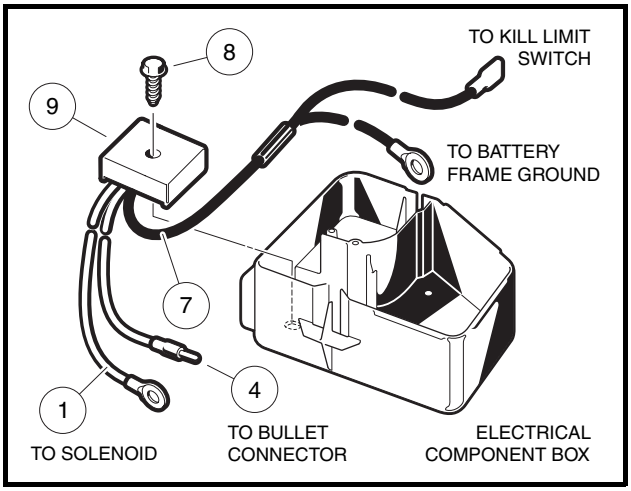

Figure 12-15 Voltage Regulator for Pedal-Start Vehicles

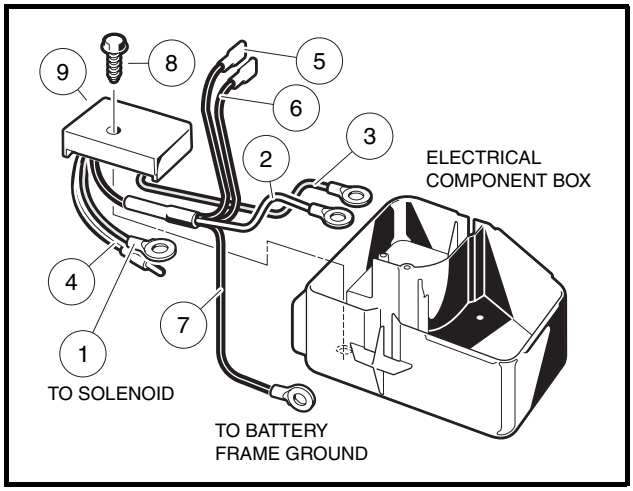

Figure 12-16 Voltage Regulator for Key-Start Vehicles

Voltage Regulator Installation

1. Position the voltage regulator (9) in the electrical component box and install the mounting screw (8) **(Figure 12-15, Page 12-12 or Figure 12-16, Page 12-12)**. Tighten screw to 23 in-lb (2.6 N·m).
2. Connect all wires as indicated:

- **Pedal-Start vehicles:** Connect the voltage regulator red wire (1) at the large post on the solenoid, the yellow wire (4) at the bullet connector, and the black wire (7) at the battery frame ground **(Figure 12-15, Page 12-12)**.
- **Key-Start vehicles:** Connect the voltage regulator red wire (1) at the large post on the solenoid, the

white wire (2) and blue wire (3) at the small post on the solenoid, the yellow wire (4) at the bullet connector, the two black wires (5) and (6) at the (NO) and (COIL) terminals on the relay, and the black wire (7) at the battery frame ground **(Figure 12-16, Page 12-12)**.

3. Install snap-on electrical component box cover. Be sure to firmly press down all corners. Install screw and tighten to 18 in-lb (2 N·m).
4. Connect battery cables, positive (+) cable first, and tighten hardware to 12 ft-lb (16 N·m). **See Figure 10-1, Section 10, Page 10-3.** Coat terminals with Battery Terminal Protector Spray (CCI P/N 1014305) to minimize corrosion.
5. Place Forward/Reverse handle in NEUTRAL and place the neutral lockout cam in the SERVICE (MAINTENANCE) position. Start the engine and check regulator for proper functioning as described in the voltage regulator test procedure. **See Test Procedure 12, Section 11, Page 11-25.**

KEY SWITCH

See General Warning, Section 10, Page 10-1.

Testing the Key Switch

See Section 11, Test Procedures 4 and 5, Page 11-19, and Test Procedure 18, Page 11-34.

Key Switch Removal

1. Disconnect the battery cables as instructed. **See WARNING "To avoid unintentionally starting..." in General Warning, Section 10, Page 10-1.**
2. Remove the center dash panel.
   - 2.1. Remove the plastic cap (1) covering the mounting screw (2) on each side of the center dash panel (3) **(Figure 12-17, Page 12-14)**.
   - 2.2. Loosen, but do not remove, the screw (2) on each side of the center dash panel (3).
   - 2.3. Insert screwdriver at the top center of the dash between dash and cowl brace. Gently pry center dash out slightly from under edge of cowl brace.
   - 2.4. Pull center dash out approximately 1 inch (2.5 cm) from the frame and then bend the top right corner of the center dash inward while pulling the top of the panel out and down. **See following NOTE.**

NOTE: *Bending the top right corner of the center dash inward during removal will prevent the terminals on the back of the key switch from touching the metal frame around the dash.*

   - 2.5. Slide center dash panel up the steering column by snapping out the top and then rotating the panel out and up. There is sufficient slack in the wiring to allow for this.
3. Disconnect the wires from the key switch.
4. Remove the key switch:
   - 4.1. Remove the key switch cap with a small, flat-blade screwdriver.
   - 4.2. Remove key switch from the dash by holding the key switch and turning the nut on the outside of the dash with a 1-inch socket wrench. Remove the keyed washer with key switch.

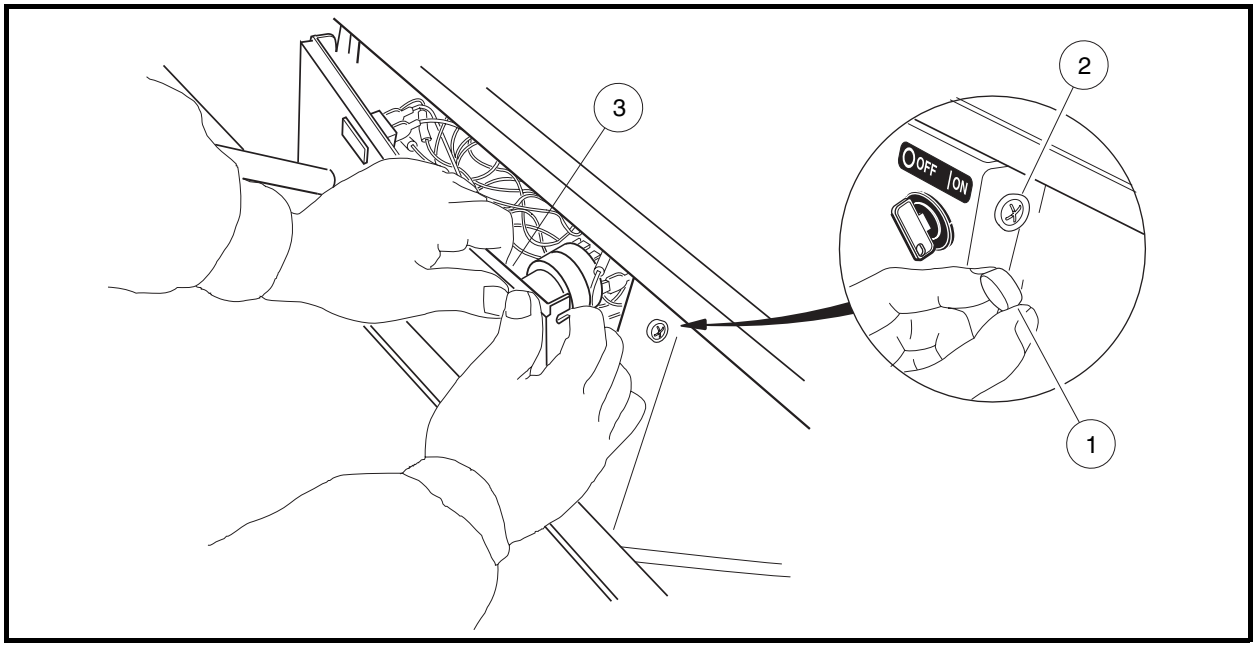

Figure 12-17 Center Dash Panel Removal

Key Switch Installation

1. Reverse removal procedures to install key switch in the dash. Connect wires to key switch. **See the appropriate wiring diagram in Section 11 – Troubleshooting and Electrical System, starting on page 11-6.** Coat the connectors with Battery Terminal Protector Spray (CCI P/N 1014305) to prevent corrosion. Be sure that key switch terminals cannot touch the frame and that panel is properly seated and snapped in place.
2. Connect battery cables, positive (+) cable first, and tighten hardware to 12 ft-lb (16 N·m). **See Figure 10-1, Section 10, Page 10-3.** Coat terminals with Battery Terminal Protector Spray (CCI P/N 1014305) to minimize corrosion.

SOLENOID

See General Warning, Section 10, Page 10-1.

Testing the Solenoid

See Test Procedure 7, Section 11, Page 11-21.

Solenoid Removal

1. Disconnect the battery cables as instructed. **See WARNING "To avoid unintentionally starting..." in General Warning, Section 10, Page 10-1.**
2. Remove electrical component box cover **(Figure 12-18, Page 12-17)**.
3. Disconnect all the wires from the solenoid.
4. Remove the two screws securing the solenoid in place.
5. Remove the solenoid.

Solenoid Installation

1. Install the solenoid in the electrical component box. Use two screws to secure the solenoid to the box and tighten to 14 in-lb (1.6 N·m).
2. Connect all wires as indicated. **See the appropriate wiring diagram in Section 11 – Troubleshooting and Electrical System, starting on page 11-6.**

- **Turf 2 and Carryall 2 vehicles:**
  - Connect the 6-gauge white wire from the starter/generator, the 18-gauge white wire from the fuel gauge/hour meter, and the 16-gauge red wire from the voltage regulator to the large post on the solenoid. **See Figure 11-1, Section 11, Page 11-6 for Turf 2 vehicles. See Figure 11-2, Section 11, Page 11-7 for Carryall 2 vehicles.**
  - Connect the 6-gauge red wire from the battery terminal and the 10-gauge red wire from the fuse block to the other large post on the solenoid.
  - Connect the 18-gauge blue wire from the key switch to the small post on the solenoid.
  - Connect the 18-gauge orange wire from the accelerator pedal limit switch to the other small post on the solenoid.
- **Carryall 2 Plus vehicles:**
  - Connect the 6-gauge white wire from the starter/generator, the 18-gauge white wire from the fuel gauge/hour meter, and the 16-gauge red wire from the voltage regulator to the large post on the solenoid. **See Figure 11-7, Section 11, Page 11-12.**
  - Connect the 6-gauge red wire from the battery terminal and the 10-gauge red wire from the fuse block to the other large post on the solenoid.
  - Connect the 18-gauge white wire from the voltage regulator and the diode, opposite directional line, to the small post on the solenoid.
  - Connect the 18-gauge orange wire from the accelerator pedal limit switch, the 18-gauge orange/white wire from the key switch, the 18-gauge blue wire from the voltage regulator, the 18-gauge orange wire from the (COIL) terminal on the relay, and the diode, directional end, to the other small post on the solenoid.
- **Turf 6 vehicles:**
  - Connect the 6-gauge white wire from the starter/generator, the 18-gauge white wire from the fuel gauge/hour meter, and the 16-gauge red wire from the voltage regulator to the large post on the solenoid. **See Figure 11-5, Section 11, Page 11-10.**
  - Connect the 6-gauge red wire from the battery terminal and the 10-gauge red wire from the fuse block to the other large post on the solenoid.
  - Connect the 16-gauge blue wire from the key switch to the small post on the solenoid
  - Connect the 18-gauge orange wire from the accelerator pedal limit switch to the other small post on the solenoid.
- **Carryall 6, Villager and TransPorter vehicles:**
  - Connect the 6-gauge white wire from the starter/generator, the 18-gauge white wire from the fuel gauge/hour meter, and the 16-gauge red wire from the voltage regulator to the large post on the solenoid. **See Figure 11-3, Section 11, Page 11-8.**
  - Connect the 6-gauge red wire from the battery terminal and the 10-gauge red wire from the fuse block to the other large post on the solenoid.
  - Connect the 18-gauge white wire from the voltage regulator and the diode, opposite directional line, to the small post on the solenoid.
  - Connect the 18-gauge orange wire from the accelerator pedal limit switch, the 18-gauge blue wire from the key switch, the 18-gauge blue wire from the voltage regulator, the 18-gauge orange wire from the (COIL) terminal on the relay, and the diode, directional end, to the other small post on the solenoid.

Solenoid Installation, Continued:

3. Tighten the hex nuts on the large solenoid posts to 60 in-lb (6.8 N·m). Tighten the nuts on the small solenoid posts to 22 in-lb (2.5 N·m).
4. Install the snap-on electrical box cover by pressing down firmly on all corners and install the screw, tightening to 18 in-lb (2 N·m).
5. Connect battery cables, positive (+) cable first, and tighten hardware to 12 ft-lb (16 N·m). **See Figure 10-1, Section 10, Page 10-3.** Coat terminals with Battery Terminal Protector Spray (CCI P/N 1014305) to minimize corrosion.

FUSE

See General Warning, Section 10, Page 10-1.

Testing the Fuse

See Test Procedure 2, Section 11, Page 11-17.

Fuse Removal

1. Disconnect the battery cables as instructed. **See WARNING "To avoid unintentionally starting..." in General Warning, Section 10, Page 10-1.**
2. Remove electrical component box cover.
3. Remove the fuse from the fuse block.

Fuse Installation

1. Install the fuse. **See following WARNING.**

⚠ WARNING

- **If a fuse is blown, determine the cause of the failure and make necessary repairs before installing a new fuse. Use the appropriately rated fuse; if a fuse with a higher amp rating is used, damage to the vehicle electrical system may occur.**

2. Install the snap-on electrical box cover by pressing down firmly on all corners and install the screw, tightening to 18 in-lb (2 N·m).
3. Connect battery cables, positive (+) cable first, and tighten hardware to 12 ft-lb (16 N·m). **See Figure 10-1, Section 10, Page 10-3.** Coat terminals with Battery Terminal Protector Spray (CCI P/N 1014305) to minimize corrosion.

KILL LIMIT SWITCH

See General Warning, Section 10, Page 10-1.

Testing the Kill Limit Switch

See Test Procedure 17, Section 11, Page 11-34.

Kill Limit Switch Removal

1. Disconnect the battery cables as instructed. **See WARNING "To avoid unintentionally starting..." in General Warning, Section 10, Page 10-1.**
2. Remove electrical component box cover (1) **(Figure 12-18, Page 12-17)**.
3. **Pedal-Start vehicle:** Remove the two nuts (9) and washers (10) securing the accelerator pedal limit switch (11). Do not disconnect the wires attached to switch (11) **(Figure 12-18, Page 12-17)**.
4. Disconnect the two white/black wires and the black wire from the kill limit switch (12).
5. Remove the kill limit switch (12).

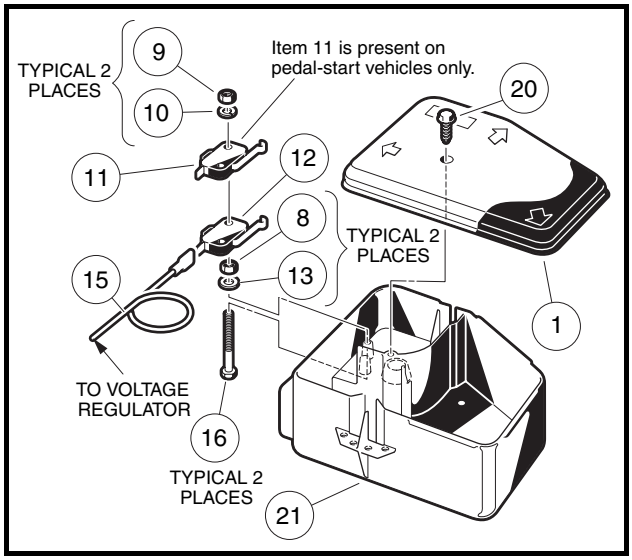

Figure 12-18 Accelerator Pedal and Kill Limit Switches – Pedal-Start Vehicles

Kill Limit Switch Installation

1. Install the kill limit switch (12) onto the two screws (16) **(Figure 12-18, Page 12-17)**.
2. Connect the two white/black wires to the common (COM) terminal and the black wire to the normally open (NO) terminal of the kill limit switch (12) and place the switch on the mounting screws located in the electrical component box. Place the accelerator limit switch (11) on the mounting screws located in the electrical component box.
3. Secure the switch(es) using two washers (10) and two nuts (9). Tighten to 5 in-lb (0.6 N·m). **See following CAUTION.**

⚠ CAUTION

- **Do not overtighten the retaining nuts. If the nuts are overtightened, limit switches could be damaged.**

4. Press and release the accelerator pedal to make sure that both switches are being activated when the pedal is released.
5. Install snap-on electrical component box cover (1). Be sure to press down firmly all corners. Install screw (20) and tighten to 18 in-lb (2 N·m).

Kill Limit Switch Installation, Continued:

6. Connect battery cables, positive (+) cable first, and tighten hardware to 12 ft-lb (16 N·m). **See Figure 10-1, Section 10, Page 10-3.** Coat terminals with Battery Terminal Protector Spray (CCI P/N 1014305) to minimize corrosion.

NEUTRAL LOCKOUT LIMIT SWITCH

See General Warning, Section 10, Page 10-1.

Testing the Neutral Lockout Limit Switch

See Test Procedure 8, Section 11, Page 11-22.

Neutral Lockout Limit Switch Removal

1. Disconnect the battery cables as instructed. **See WARNING "To avoid unintentionally starting..." in General Warning, Section 10, Page 10-1.**
2. Disconnect the wires from the neutral lockout limit switch (5) located on the back of the Forward/Reverse shifter assembly **(Figure 12-19, Page 12-19)**.
3. Remove two nuts (2) and washers (6) from the neutral lockout limit switch (5) and slide the neutral lockout limit switch off of the screws.

Neutral Lockout Limit Switch Installation

1. Install the neutral lockout limit switch (5) with two washers (6) and two nuts (2) **(Figure 12-19, Page 12-19)**. Tighten to 5 in-lb (0.6 N·m). Place the Forward/Reverse handle in REVERSE to make sure that both switches actuate. **See following CAUTION.**

⚠ CAUTION

- **Do not overtighten the retaining nuts. If the nuts are overtightened, limit switches could be damaged.**

2. Connect wires to Neutral Lockout Limit Switch:

- **Pedal-Start vehicles:** Connect the black wire to common (COM) terminal, the green wire to the normally open (NO) terminal and the white wire to the normally closed (NC) terminal of the neutral lockout limit switch. **See Wiring Diagrams, Section 11, Page 11-6.**
- **Key-Start vehicles:** Connect the red wire to common (COM) terminal and the brown wire to the normally open (NO) terminal. **See Wiring Diagrams, Section 11, Page 11-6.**

3. Connect battery cables, positive (+) cable first, and tighten hardware to 12 ft-lb (16 N·m). **See Figure 10-1, Section 10, Page 10-3.** Coat terminals with Battery Terminal Protector Spray (CCI P/N 1014305) to minimize corrosion.
4. Check limit switch operation.

- **Pedal-Start vehicles:** Place the Forward/Reverse handle in the NEUTRAL position. The neutral lockout cam should be in the OPERATE position. Make sure everyone is clear of the vehicle. Turn the key switch to the ON position. The engine should not crank when pressing the accelerator. If the engine does crank, turn the key switch OFF and readjust the shift linkage.
- **Key-Start vehicles:** Place the Forward/Reverse handle in the NEUTRAL position. The neutral lockout cam should be in the OPERATE position. Make sure everyone is clear of the vehicle. Turn the key switch to the START position and hold until the engine is running smoothly. Release the key and it will

return to the ON position and the engine should idle. With the Forward/Reverse handle still in the NEUTRAL position, the engine should shut off when pressing the accelerator pedal. If the engine does not stop, turn the key switch OFF and readjust the shift linkage.

5. Test drive the vehicle in both forward and reverse for proper operation.

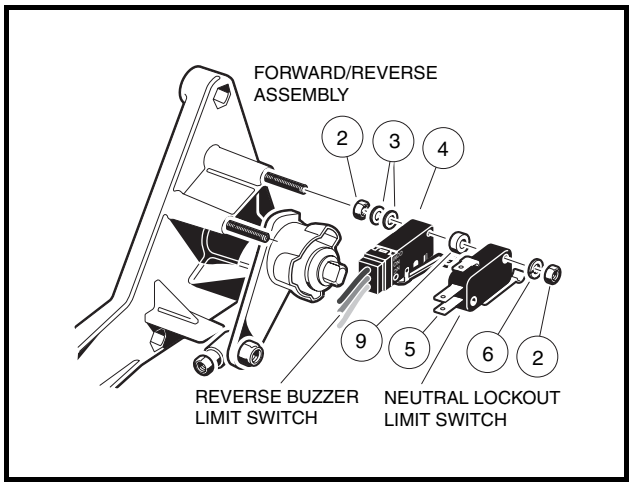

Figure 12-19 Neutral Lockout and Reverse Buzzer Limit Switches

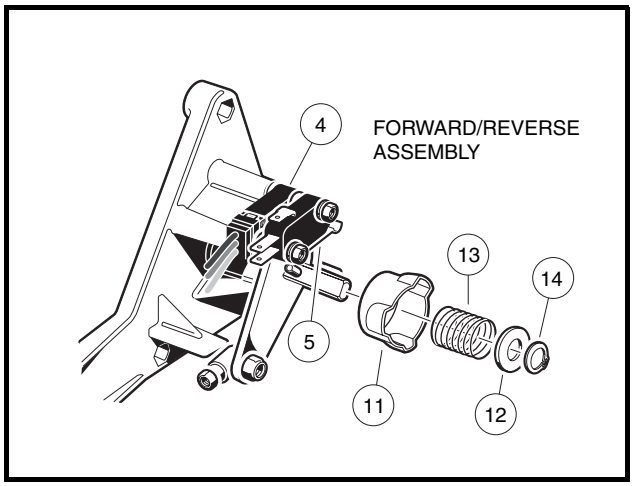

Figure 12-20 Neutral Lockout Cam

NEUTRAL LOCKOUT CAM

See General Warning, Section 10, Page 10-1.

If the cam lobes have worn to the point where they will no longer activate the neutral lockout limit switch, the cam must be replaced.

Testing the Neutral Lockout Cam

See Test Procedure 24, Section 11, Page 11-37.

Neutral Lockout Cam Removal

1. Disconnect the battery cables as instructed. **See WARNING "To avoid unintentionally starting..." in General Warning, Section 10, Page 10-1.**
2. Remove the external snap ring (14) **(Figure 12-20, Page 12-19)**.
3. Remove the plastic washer (12) and the spring (13).
4. Remove the cam (11).

Neutral Lockout Cam Installation

1. Install the cam (11) **(Figure 12-20, Page 12-19)**.
2. Install the spring (13) and the plastic washer (12).
3. Install the external snap ring (14) onto the shaft. Be sure the snap ring is installed in the groove on the shaft.
4. Connect battery cables, positive (+) cable first, and tighten hardware to 12 ft-lb (16 N·m). **See Figure 10-1, Section 10, Page 10-3.** Coat terminals with Battery Terminal Protector Spray (CCI P/N 1014305) to minimize corrosion.

REVERSE WARNING BUZZER

See General Warning, Section 10, Page 10-1.

Testing the Reverse Warning Buzzer

See Test Procedure 21, Section 11, Page 11-36.

Front Reverse Warning Buzzer Removal

1. Disconnect the battery cables as instructed. **See WARNING "To avoid unintentionally starting..." in General Warning, Section 10, Page 10-1.**
2. Remove the center dash panel. **See Key Switch Removal on page 12-13.**
3. Disconnect the wires from the reverse warning buzzer (2). Do not allow wires to touch **(Figure 12-21, Page 12-21)**.
4. Remove the mounting screws (3) securing the buzzer to the center dash.

Front Reverse Warning Buzzer Installation

1. Install the screws (3) through the buzzer bracket tabs and tighten to 3.5 in-lb (0.40 N·m) **(Figure 12-21, Page 12-21)**.
2. Connect the black wire from the key switch to the negative (–) terminal on the buzzer.
3. Connect the red/white wire from the wire harness to the positive (+) terminal on the buzzer.
4. Reverse removal procedures to install the center dash in the vehicle. Be sure that the key switch terminals cannot touch the frame and that the panel is properly seated and snapped in place.
5. Connect battery cables, positive (+) cable first, and tighten hardware to 12 ft-lb (16 N·m). **See Figure 10-1, Section 10, Page 10-3.** Coat terminals with Battery Terminal Protector Spray (CCI P/N 1014305) to minimize corrosion.

Rear Reverse Warning Buzzer Removal

For Turf 6, Carryall 6, Villager, and TransPorter vehicles:

1. Disconnect the battery cables as instructed. **See WARNING "To avoid unintentionally starting..." in General Warning, Section 10, Page 10-1.**
2. Remove the bed or seat. **See Section 5 – Body and Trim in the appropriate maintenance and service manual.**
3. Disconnect the wires from the reverse warning buzzer. Do not allow wires to touch **(Figure 12-22, Page 12-21)**.
4. Remove the mounting screws (10) securing the buzzer (9) to the left rear fender.

Rear Reverse Warning Buzzer Installation

For Turf 6, Carryall 6, Villager, and TransPorter vehicles:

1. Install the screws (10) through the buzzer bracket tabs and tighten to a torque of 3.5 in-lb (0.4 N·m) **(Figure 12-22, Page 12-21)**.
2. Connect black wire (11) from frame ground to the negative (–) terminal on the buzzer.
3. Connect the red/white wire from the wire harness to the positive (+) terminal on the buzzer.
4. Connect battery cables, positive (+) cable first, and tighten hardware to 12 ft-lb (16 N·m). **See Figure 10-1, Section 10, Page 10-3.** Coat terminals with Battery Terminal Protector Spray (CCI P/N 1014305) to minimize corrosion.

5. Install the bed or seat. **See Section 5 – Body and Trim in the appropriate maintenance and service manual**.

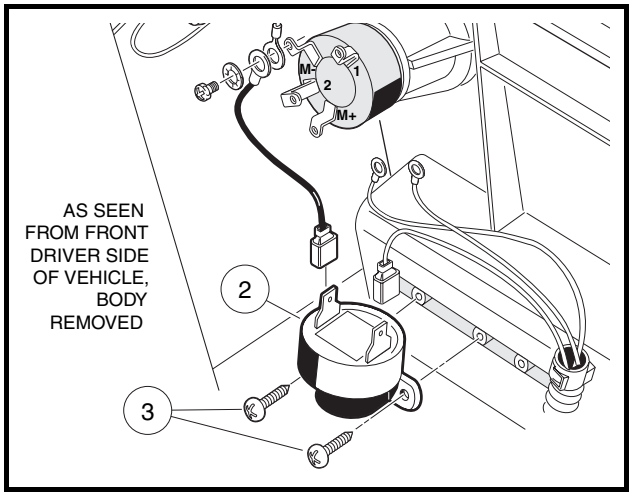

Figure 12-21 Front Reverse Warning Buzzer

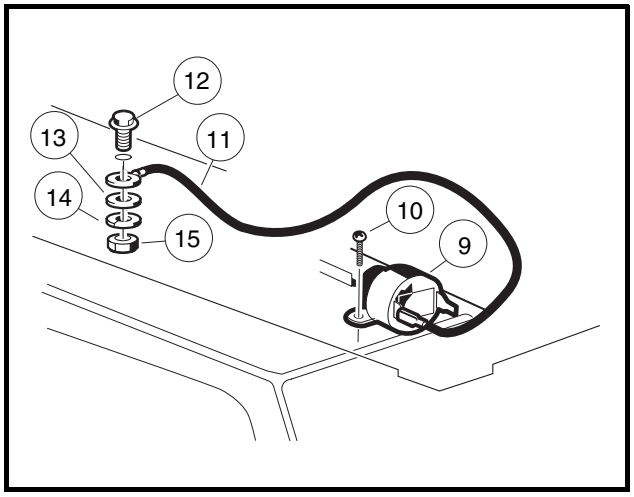

Figure 12-22 Rear Reverse Warning Buzzer

REVERSE BUZZER LIMIT SWITCH

See General Warning, Section 10, Page 10-1.

Testing the Reverse Buzzer Limit Switch

See Test Procedure 20, Section 11, Page 11-36.

Reverse Buzzer Limit Switch Removal

1. Disconnect the battery cables as instructed. **See WARNING "To avoid unintentionally starting..." in General Warning, Section 10, Page 10-1.**
2. Disconnect the wires from the reverse buzzer limit switch (4) located on the back of the Forward/Reverse assembly **(Figure 12-19, Page 12-19)**.
3. Remove the nuts (2) and washers (6) from the neutral lockout limit switch (5) and slide the neutral lockout limit switch off of the screws. Do not disconnect the wires.
4. Remove the spacers (9) from the reverse buzzer limit switch (4) and slide the reverse buzzer limit switch off the screws.

Reverse Buzzer Limit Switch Installation

1. Install the reverse buzzer limit switch (4), and then install two spacers (9) against the limit switch **(Figure 12-19, Page 12-19)**.
2. Install the neutral lockout limit switch (5) with two washers (6) and two nuts (2). Tighten to 5 in-lb (0.6 N·m). **See following CAUTION.**

⚠ CAUTION

- **Do not overtighten the retaining nuts. If the nuts are over tightened, limit switches could be damaged.**

Reverse Buzzer Limit Switch Installation, Continued:

3. Place the Forward/Reverse handle in REVERSE and make sure that both switches actuate.
4. Connect the orange wire to the common (COM) terminal and the red/white wire to the normally open (NO) terminal of the reverse buzzer limit switch (4) **(Figure 12-19, Page 12-19)**.
5. Connect battery cables, positive (+) cable first, and tighten hardware to 12 ft-lb (16 N·m). **See Figure 10-1, Section 10, Page 10-3.** Coat terminals with Battery Terminal Protector Spray (CCI P/N 1014305) to minimize corrosion.
6. Turn the key switch to the ON position. Shift the Forward/Reverse handle to the REVERSE position. The buzzer should sound.

LOW OIL WARNING LIGHT

See General Warning, Section 10, Page 10-1.

Testing the Low Oil Warning Light

See Test Procedure 22, Section 11, Page 11-36.

Low Oil Warning Light Removal

1. Disconnect the battery cables as instructed. **See WARNING "To avoid unintentionally starting..." in General Warning, Section 10, Page 10-1.**
2. Remove the center dash panel. **See Key Switch Removal on page 12-13.**
3. Disconnect the wires from the low oil warning light (11) **(Figure 12-23, Page 12-23)**. Do not allow wires to touch.
4. Press the retaining tabs and remove the low oil warning light from the center dash.

Low Oil Warning Light Installation

1. Push a new unit into hole in dash until plastic tabs engage dash **(Figure 12-23, Page 12-23)**.
2. Connect yellow wire from the key switch and yellow wire from the oil level sensor to the low oil warning light.
3. Install the center dash in reverse order of removal. Be sure that key switch terminals cannot touch the frame and that panel is properly seated and snapped in place.
4. Connect battery cables, positive (+) cable first, and tighten hardware to 12 ft-lb (16 N·m). **See Figure 10-1, Section 10, Page 10-3.** Coat terminals with Battery Terminal Protector Spray (CCI P/N 1014305) to minimize corrosion.

FUEL GAUGE/HOUR METER

See General Warning, Section 10, Page 10-1.

Testing the Fuel Gauge/Hour Meter

See Test Procedure 27, Section 11, Page 11-39.

With the key switch in the OFF position, the fuel gauge/hour meter fields are blank. When the key switch is turned to ON, both fields activate. The fuel gauge initially registers *full* for a brief moment before indicating the actual fuel level.

The hour meter displays the number of hours of use in increments of 0.1 hour, but does not record additional time unless the engine is running. When the hour meter is recording, the hourglass icon at the left of the field blinks slowly.

Fuel Gauge/Hour Meter Removal

1. Disconnect the battery cables as instructed. **See WARNING "To avoid unintentionally starting..." in General Warning, Section 10, Page 10-1.**
2. Remove the center dash panel. **See Key Switch Removal on page 12-13.**
3. Disconnect the wires from the fuel gauge/hour meter **(Figure 12-24, Page 12-23)**.
4. Remove the two hex nuts (3) and lock washers (4) from the threaded studs on the back of the gauge. Remove the mounting bracket (5) from the back side of the fuel gauge/hour meter (2) and remove the fuel gauge/hour meter from the dash.

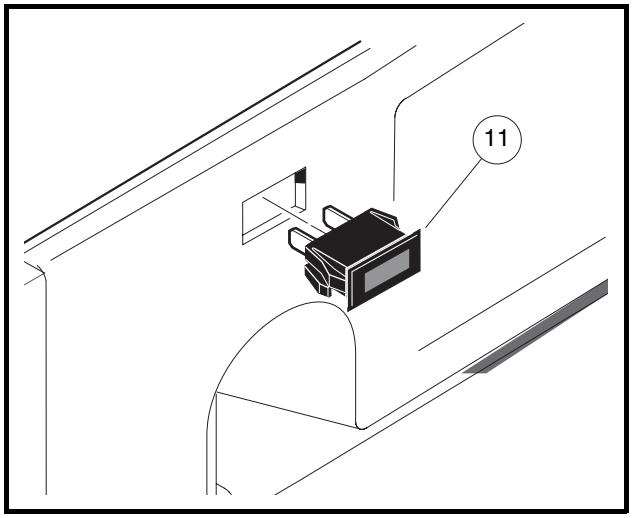

Figure 12-23 Low Oil Warning Light

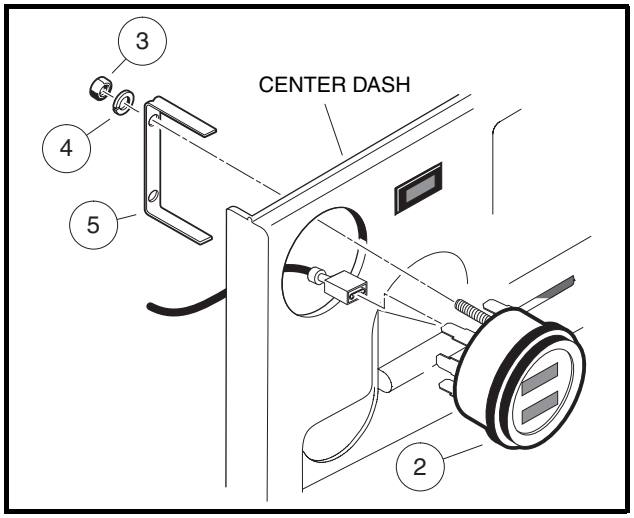

Figure 12-24 Fuel Gauge/Hour Meter Installation

Fuel Gauge/Hour Meter Installation

1. Install a new fuel gauge/hour meter into hole in dash until flange seats against dash **(Figure 12-24, Page 12-23)**.
2. Slide the mounting bracket onto the two threaded studs on the fuel gauge/hour meter and secure with two lock washers and two hex nuts. Tighten to 2.5 in-lb (0.28 N·m). Place one drop of Loctite™ on each hex nut. Do not allow Loctite to come into contact with the fuel gauge/hour meter casing.
3. Connect the orange wire from the fuel level sending unit to the no. 1 terminal, the blue wire from the key switch to the no. 2 terminal, the black wire from the frame ground to the no. 3 terminal, and the white wire from the solenoid to the no. 4 terminal on the fuel gauge/hour meter. **See the appropriate wiring diagram in Section 11, starting on page 11-6.**
4. Coat terminals with Battery Terminal Protector Spray (CCI P/N 1014305).
5. Install the center dash in reverse order of removal. Be sure that key switch terminals cannot touch the frame and that panel is properly seated and snapped in place.
6. Connect battery cables, positive (+) cable first, and tighten hardware to 12 ft-lb (16 N·m). **See Figure 10-1, Section 10, Page 10-3.** Coat terminals with Battery Terminal Protector Spray (CCI P/N 1014305) to minimize corrosion.

FUEL LEVEL SENDING UNIT

See General Warning, Section 10, Page 10-1.

The fuel level sending unit is an integral part of the fuel tank and should never be removed. Thoroughly test the fuel level sending unit before replacing the fuel tank.

Testing the Fuel Level Sending Unit

See Test Procedure 26, Section 11, Page 11-38.

RPM LIMITER

See General Warning, Section 10, Page 10-1.

Testing the RPM Limiter

See Test Procedure 15, Section 11, Page 11-28.

RPM Limiter Removal

1. Disconnect the battery cables as instructed. **See WARNING "To avoid unintentionally starting..." in General Warning, Section 10, Page 10-1.**
2. Disconnect the white/black wire from the black wire at the bullet connector located near the RPM limiter **(Figure 12-25, Page 12-24)**.
3. Disconnect the other black wire at the other bullet connector near the RPM limiter.
4. Remove the flange-head bolts from the RPM limiter band and remove the RPM limiter and damper **(Figure 12-25, Page 12-24)**.

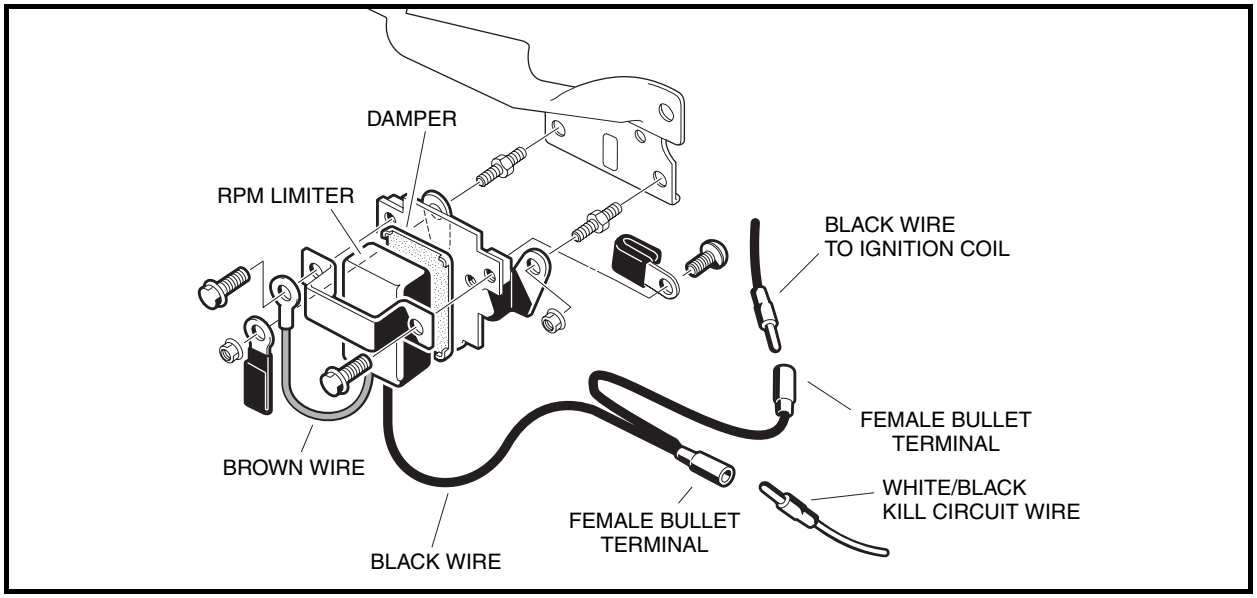

Figure 12-25 RPM Limiter

RPM Limiter Installation

1. Place the RPM limiter damper on the front of the RPM limiter mounting bracket **(Figure 12-25, Page 12-24)**.
2. Place the RPM limiter on the damper squarely so that RPM limiter fits tightly against the damper.
3. Place the band over the RPM limiter and align the holes. Place the brown wire ring connector onto the flange-head bolt and secure the left side of the band. Use another flange-head bolt to secure the other side of the band. Make sure the band holds the RPM limiter securely in place. Tighten fasteners to 7 ft-lb (9.5 N·m).
4. Connect black wire at the bullet connector to the white/black wire.
5. Connect battery cables, positive (+) cable first, and tighten hardware to 12 ft-lb (16 N·m). **See Figure 10-1, Section 10, Page 10-3.** Coat terminals with Battery Terminal Protector Spray (CCI P/N 1014305) to minimize corrosion.

IGNITION COIL

See General Warning, Section 10, Page 10-1.

Testing the Ignition Coil

See Section 11, Test Procedure 14, Page 11-27, and Test Procedure 16, Page 11-28.

Ignition Coil Removal

1. Disconnect the battery cables as instructed. **See WARNING "To avoid unintentionally starting..." in General Warning, Section 10, Page 10-1.**
2. Disconnect spark plug wire from the spark plug. **See WARNING "To avoid unintentionally starting..." in General Warning, Section 10, Page 10-1.**
3. Remove the muffler. **See Muffler Removal, Section 15, Page 15-1.**
4. Cut the wire tie holding the wire harness to the stiffener (1) and remove the bolts (2) and nuts (3) securing the stiffener to the mounting plate (4) **(Figure 12-26, Page 12-26)**.
5. Remove the pan-head bolts (5) securing the fan shroud (8) to the fan housing (9) **(Figure 12-27, Page 12-26)**.
6. Loosen, but do not remove, the three bolts (6) attaching the fan housing as shown **(Figure 12-27, Page 12-26)**.
7. Remove the remaining four bolts (10) attaching the fan housing as shown **(Figure 12-27, Page 12-26)**, then while opening the housing, detach the spark plug wire grommet (4) from the housing **(Figure 12-29, Page 12-27)**.
8. Disconnect the 18-gauge black wire (12) from the spade terminal on the ignition coil (11) and remove the coil by removing two bolts (10) **(Figure 12-28, Page 12-26)**.

Ignition Coil Removal, Continued:

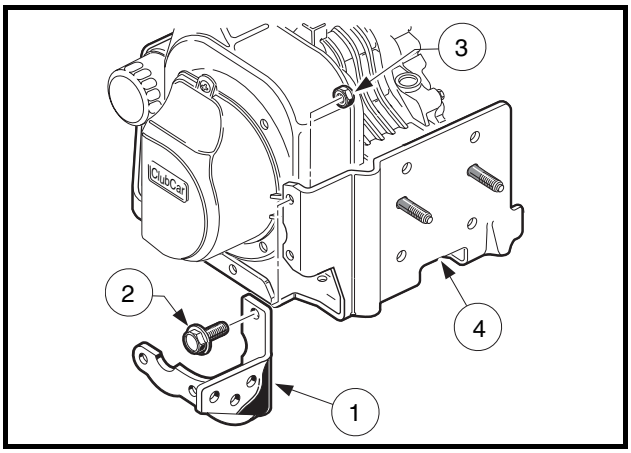

Figure 12-26 Stiffener Removal

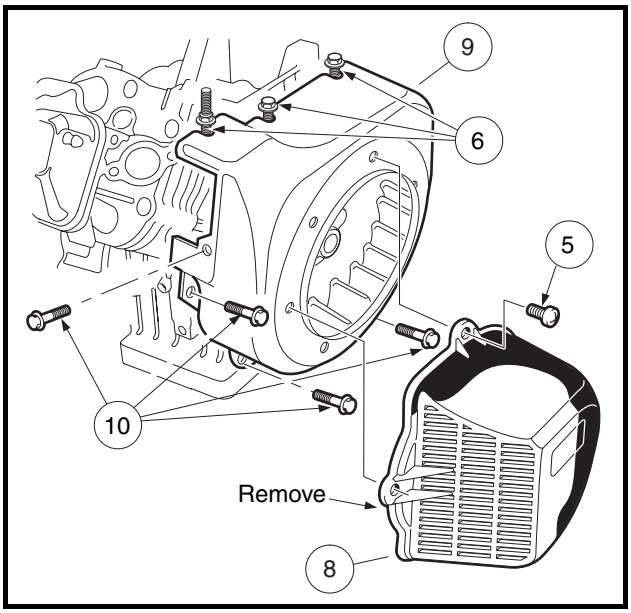

Figure 12-27 Fan Housing Removal

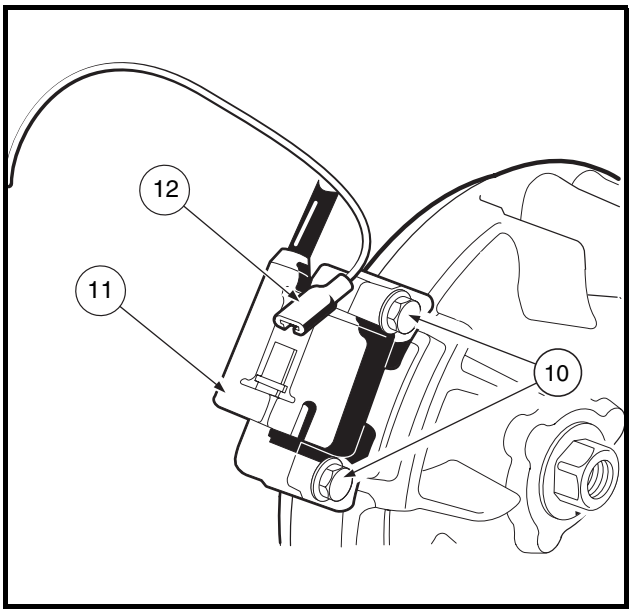

Figure 12-28 Ignition Coil Removal

Ignition Coil Installation

NOTE: *If a new ignition coil is being installed, the spark plug cap, gasket, protector tube and grommet must be removed from the old coil and installed on the new coil.* ***See steps 1 through 8 for procedures to remove and install these existing parts.***

If the existing ignition coil will be remounted, proceed to step 9.

1. Remove the rubber gasket (1) on the plug cap (2) by rolling back the gasket onto the spark plug wire **(Figure 12-29, Page 12-27)**.
2. Remove the cap (2) from the wire by turning the cap counterclockwise three or four revolutions while gently pulling it off the wire.

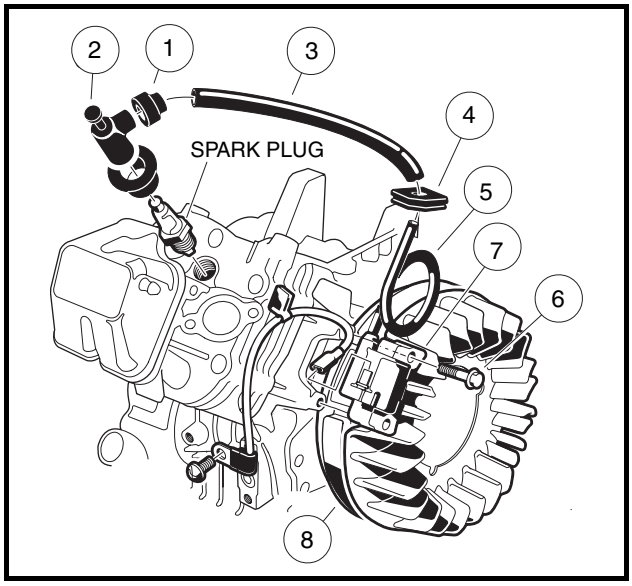

Figure 12-29 Spark Plug Wire

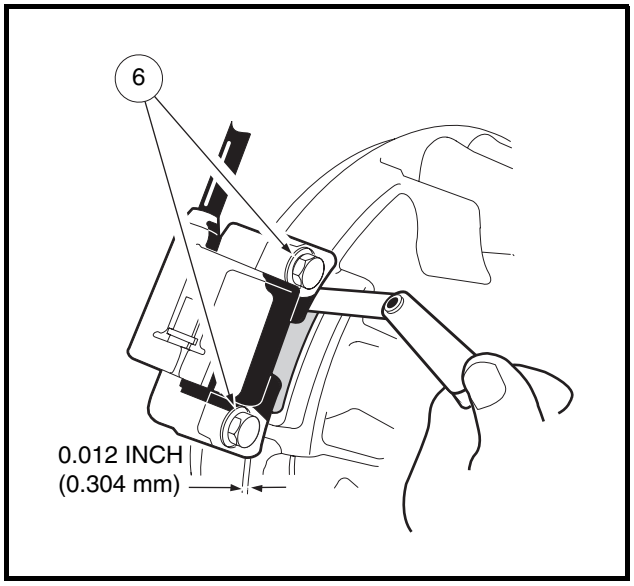

Figure 12-30 Mount Ignition Coil Using Feeler Gauge

3. Remove the gasket (1) and protector tube (3) from the old coil. **See following NOTE.**

NOTE: *Moisten the spark plug wire with water to make gasket removal and installation easier.*

4. Remove the grommet (4) from the old spark plug wire. Clean the grommet and place it on the new spark plug wire (5).
5. Install the protector tube onto the new wire.
6. Slide the gasket onto the end of the new spark plug wire.
7. Install the cap on the new coil spark plug wire by rotating it clockwise three or four revolutions while applying light pressure on the cap.
8. Install the gasket (1) on the cap (2).
9. Position the ignition coil (7) onto the cast mounting bosses on the engine crankcase and tighten the two mounting bolts (6) to finger-tight at this time.
10. Rotate the flywheel (8) until the magnet is positioned directly under the ignition coil. Use a 0.012-inch (0.304 mm) bronze feeler gauge to set the air gap between the ignition coil and the flywheel magnet. Tighten the two mounting bolts (6) to 30 in-lb (3.4 N·m) **(Figure 12-30, Page 12-27)**.
11. Connect the 18-gauge black wire to the spade terminal on the coil.
12. Position the fan housing close to the engine crankcase and slide the plug wire grommet into the notch on the housing.
13. When installing fan housing, make sure the top front corner of the housing is above the upper cylinder shroud. The front edge of the fan housing should be behind the lower cylinder shroud. Align the slots in the housing with the flanged bolts loosened earlier.
14. Install the four remaining flange bolts that secure the fan housing to the engine crankcase. Tighten all seven mounting bolts to 90 in-lb (10.2 N·m) **(Figure 12-27, Page 12-26)**.

Ignition Coil Installation, Continued:

15. Install the stiffener with four hex-head bolts and lock nuts. Tighten the hardware to 23 ft-lb (30.5 N·m).
16. Install the fan shroud with four pan-head bolts (5). Tighten to 50 in-lb (5.7 N·m) **(Figure 12-27, Page 12-26)**.
17. Secure the wire harness to the stiffener with a wire tie. Place the wire tie through the lower hole at the back of the stiffener **(Figure 12-26, Page 12-26)**.

⚠ CAUTION

- **Make sure wire harness is routed and secured away from the muffler.**

18. Install the muffler. **See Muffler Installation, Section 15, Page 15-1.**
19. Connect the spark plug wire to the spark plug.
20. Connect battery cables, positive (+) cable first, and tighten hardware to 12 ft-lb (16 N·m). **See Figure 10-1, Section 10, Page 10-3.** Coat terminals with Battery Terminal Protector Spray (CCI P/N 1014305) to minimize corrosion.

OIL LEVEL SENSOR

See General Warning, Section 10, Page 10-1.

Testing the Oil Level Sensor

See Test Procedure 23, Section 11, Page 11-37.

Oil Level Sensor Removal

See Oil Level Sensor Removal, Section 13, Page 13-6.

Oil Level Sensor Installation

See Oil Level Sensor Installation, Section 13, Page 13-6.

RELAY

See General Warning, Section 10, Page 10-1.

Testing the Relay

See Section 11, Test Procedure 29, Page 11-40 and Test Procedure 30, Page 11-41.

Relay Removal

1. Disconnect the battery cables as instructed. **See WARNING "To avoid unintentionally starting..." in General Warning, Section 10, Page 10-1.**
2. Remove electrical component box cover **(Figure 12-31, Page 12-29)**.
3. Remove the mounting bolt (9), washer (10), lock washer (12), and nut (13) from the relay (38).
4. Lift the relay and mounting bracket (11) out of the electrical component box (21).
5. Disconnect the wires from the terminals. Slide the relay off the mounting bracket (11).

Relay Installation

1. Slide the relay (38) onto the mounting bracket (11) until the relay is locked in place.
2. Connect the wires to the terminals on the relay **(Figure 12-31, Page 12-29)**.
3. Secure the relay and mounting bracket to the electrical component box. Tighten hardware to 22 in-lb (2.5 N·m) **(Figure 12-31, Page 12-29)**.
4. Install snap-on electrical component box cover. Firmly press down all corners before installing screw to 18 in-lb (2 N·m).
5. Connect battery cables, positive (+) cable first, and tighten hardware to 12 ft-lb (16 N·m). **See Figure 10-1, Section 10, Page 10-3.** Coat terminals with Battery Terminal Protector Spray (CCI P/N 1014305) to minimize corrosion.

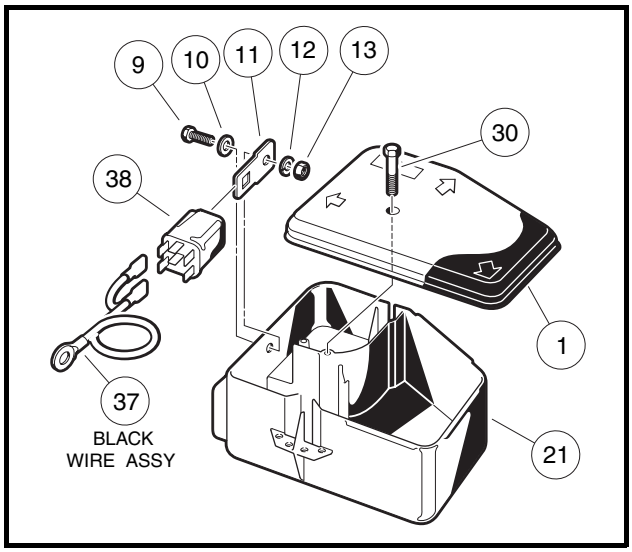

Figure 12-31 Relay Assembly – Key-Start Vehicles

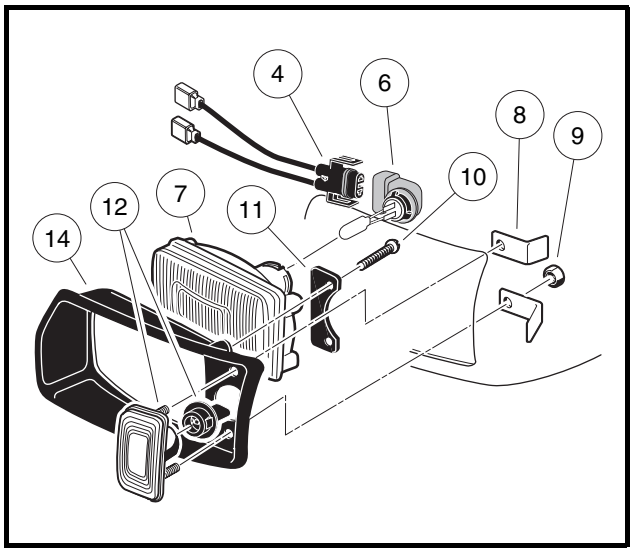

Figure 12-32 Headlight Assembly

HEADLIGHTS

See General Warning, Section 10, Page 10-1.

Testing the Headlight Socket

See Test Procedure 37, Section 11, Page 11-50.

Headlight Bulb Removal

1. Disconnect the battery cables as instructed. **See WARNING "To avoid unintentionally starting..." in General Warning, Section 10, Page 10-1.**
2. From the front of vehicle, reach under cowl and turn the wire harness/halogen bulb assembly, (4 and 6), clockwise one-quarter turn **(Figure 12-32, Page 12-29)**.
3. Remove the wire harness/halogen bulb assembly (4 and 6) from the headlight lens (7).
4. Lift the retaining tabs on the connector (4) and remove halogen bulb assembly (6).

Headlight Bulb Installation

NOTE: *When handling halogen bulbs, do not touch glass portion of bulb. Oil from finger tips can cause premature failure of bulb.*

1. Connect wire harness (4) to the halogen bulb assembly (6). The retaining tab should lock onto the halogen bulb assembly **(Figure 12-32, Page 12-29)**.
2. From the front of vehicle, reach under cowl and insert wire harness/halogen bulb assembly (4 and 6), into the headlight lens (7).
3. Turn the wire harness/halogen bulb assembly (4 and 6) counterclockwise one-quarter turn.
4. Connect battery cables, positive (+) cable first, and tighten hardware to 12 ft-lb (16 N·m). **See Figure 10-1, Section 10, Page 10-3.** Coat terminals with Battery Terminal Protector Spray (CCI P/N 1014305) to minimize corrosion.

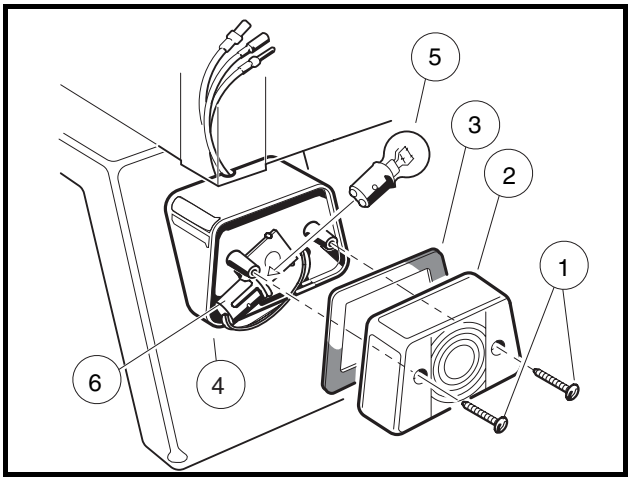

Figure 12-33 Taillight Assembly

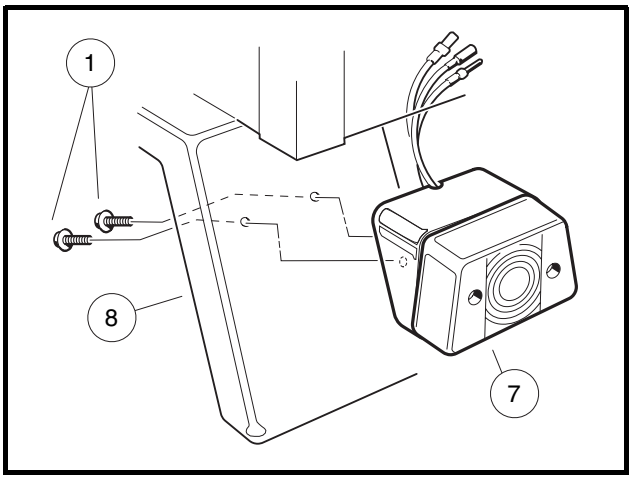

Figure 12-34 Mount Taillight To Rear Fender

TAILLIGHTS

See General Warning, Section 10, Page 10-1.

Testing the Taillight Bulb and Socket

See Test Procedure 35, Section 11, Page 11-49.

TAILLIGHT BULB REMOVAL

1. Disconnect the battery cables as instructed. **See WARNING "To avoid unintentionally starting..." in General Warning, Section 10, Page 10-1.**
2. Remove the screws (1) securing the taillight lens (2) to the taillight (4). Remove the taillight lens and gasket (3).
3. Push the light bulb (5) in and turn it one quarter-turn counterclockwise **(Figure 12-33, Page 12-30)**.
4. Remove the light bulb from the socket (6).

Taillight Bulb Installation

1. Align the small pins on the side of the light bulb with the slots in the light socket. Slide the bulb into the socket and turn one quarter-turn clockwise **(Figure 12-33, Page 12-30)**.
2. Place the gasket onto the light assembly. Place the taillight lens onto the light assembly with the mounting holes aligned and install the screws.
3. Connect battery cables, positive (+) cable first, and tighten hardware to 12 ft-lb (16 N·m). **See Figure 10-1, Section 10, Page 10-3.** Coat terminals with Battery Terminal Protector Spray (CCI P/N 1014305) to minimize corrosion.

Taillight Removal

1. Disconnect the battery cables as instructed. **See WARNING "To avoid unintentionally starting..." in General Warning, Section 10, Page 10-1.**
2. Remove the screws (1) securing the taillight (7) to the rear fender (8) **(Figure 12-34, Page 12-30)**.
3. Disconnect the wires and remove the taillight.

Taillight Installation

1. Connect the wires from the taillight to the lighting harness.
2. Mount the taillight to the rear fender with two screws **(Figure 12-34, Page 12-30)**.
3. Connect battery cables, positive (+) cable first, and tighten hardware to 12 ft-lb (16 N·m). **See Figure 10-1, Section 10, Page 10-3.** Coat terminals with Battery Terminal Protector Spray (CCI P/N 1014305) to minimize corrosion.
4. Ensure that taillights and brake lights are functioning correctly.

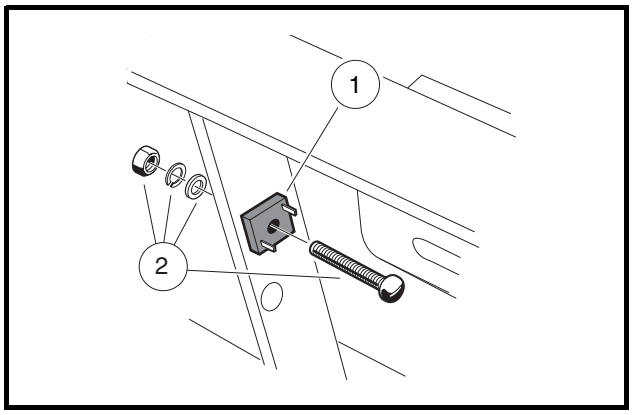

Figure 12-35 Voltage Limiter

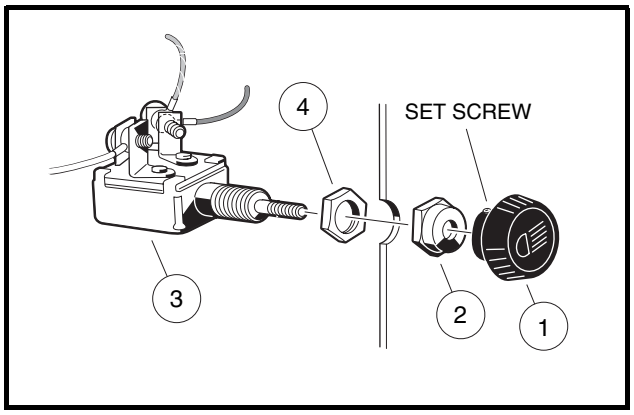

Figure 12-36 Light Switch

VOLTAGE LIMITER

See General Warning, Section 10, Page 10-1.

Testing the Voltage Limiter

See Test Procedure 34, Section 11, Page 11-48.

Voltage Limiter Removal

1. Disconnect the battery cables as instructed. **See WARNING "To avoid unintentionally starting..." in General Warning, Section 10, Page 10-1.**
2. Remove the center dash panel. **See Key Switch Removal on page 12-13.**
3. Disconnect wires from the voltage limiter (1) **(Figure 12-35, Page 12-31)**.
4. Remove the mounting hardware (2) from the voltage limiter and remove it from the vehicle.

Voltage Limiter Installation

1. Mount the voltage limiter to the frame using the mounting hardware. Tighten to 25 in-lb (2.8 N·m) **(Figure 12-35, Page 12-31)**.
2. Connect the black 16-gauge wire from the harness to the negative (–) terminal on the voltage limiter. Connect the black wire from the ground terminal block to the positive (+) terminal on the voltage limiter.
3. Install the center dash in reverse order of removal. Be sure that key switch terminals cannot touch the frame and that panel is properly seated and snapped in place.
4. Connect battery cables, positive (+) cable first, and tighten hardware to 12 ft-lb (16 N·m). **See Figure 10-1, Section 10, Page 10-3.** Coat terminals with Battery Terminal Protector Spray (CCI P/N 1014305) to minimize corrosion.

HEADLIGHT SWITCH

See General Warning, Section 10, Page 10-1.

Testing the Light Switch

See Test Procedure 32, Section 11, Page 11-43.

Headlight Switch Removal

1. Disconnect the battery cables as instructed. **See WARNING "To avoid unintentionally starting..." in General Warning, Section 10, Page 10-1.**
2. Loosen the set screw locking the light switch knob (1) to the shaft **(Figure 12-36, Page 12-31)**.
3. Remove the center dash panel. **See Key Switch Removal on page 12-13.**
4. Disconnect the wires from the light switch.
5. Remove the outer nut (2) from the switch **(Figure 12-36, Page 12-31)**.
6. Remove the light switch (3) from the center dash.

Headlight Switch installation

1. Connect the wires to the light switch. **See Wiring Diagrams, Section 11, Page 11-6.**
2. Thread the check nut (4) onto the switch until an equal number of threads show on both sides. Insert the switch through the center dash and install the nut on the outside of the dash. Tighten the nut to 14 in-lb (1.6 N·m) **(Figure 12-36, Page 12-31)**.
3. Push the light switch shaft in. Screw the knob onto the end of the shaft until the knob touches the outer nut. Then turn the knob in the opposite direction until the headlight beams on the knob are horizontal to the ground. Tighten the set screw to lock the knob to the shaft.
4. Install the center dash in reverse order of removal. Be sure that key switch terminals cannot touch the frame and that panel is properly seated and snapped in place.

5. Connect battery cables, positive (+) cable first, and tighten hardware to 12 ft-lb (16 N·m). **See Figure 10-1, Section 10, Page 10-3.** Coat terminals with Battery Terminal Protector Spray (CCI P/N 1014305) to minimize corrosion.

BRAKE LIGHT RELAY

See General Warning, Section 10, Page 10-1.

Testing the Brake Light Relay

See Test Procedure 33, Section 11, Page 11-44.

Brake Light Relay Removal

1. Disconnect the battery cables as instructed. **See WARNING "To avoid unintentionally starting..." in General Warning, Section 10, Page 10-1.**
2. Remove center dash panel. **See step 2 of Key Switch Removal on page 12-13.**
3. Remove the front body. **See Front Body Removal in Section 4 of the appropriate maintenance and service manual.**
4. Remove the two voltage suppressor wires (11) from the coil terminals of the brake light relay (12) **(Figure 12-37, Page 12-33 or Figure 12-38, Page 12-33)**.
5. Remove the two wires from the contact terminals of the brake light relay.
6. Remove the two nuts (15), two screws (13), and two washers (14) from the brake light relay (12).
7. Remove the brake light relay from the vehicle.

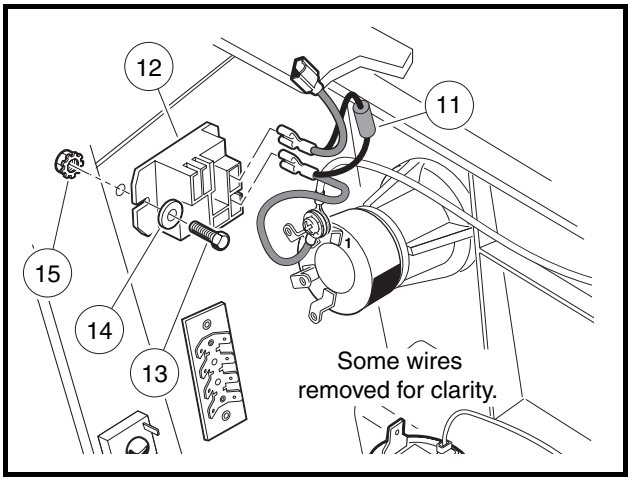

Figure 12-37 Brake Light Relay – Pedal-Start Vehicle

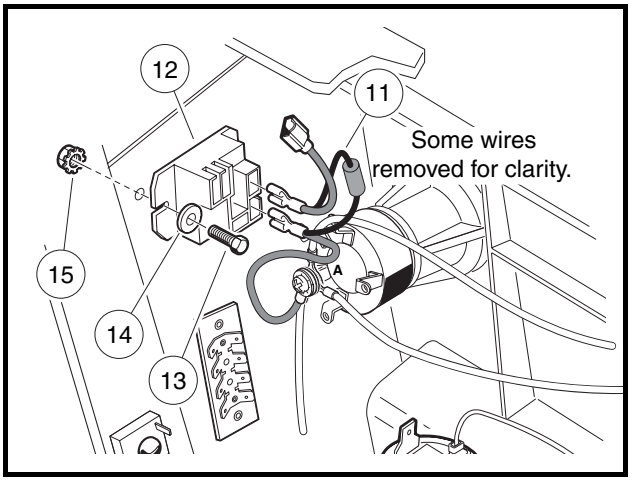

Figure 12-38 Brake Light Relay – Key-Start Vehicle

Brake Light Relay Installation

1. Secure the brake light relay (12) to the vehicle frame as shown with two screws (13), two washers (14), and two nuts (15) **(Figure 12-37, Page 12-33 or Figure 12-37, Page 12-33)**. Tighten nuts to 30 in-lb (3.4 N·m)
2. Connect the two wires from the voltage suppressor (11) to the coil terminals on the brake light relay (12) as shown.

Brake Light Relay Installation, Continued:

3. Connect the two brake light wires to the COM (common) and NO (normally open) terminals of the brake light relay.
4. Install the front body. **See Front Body Installation in Section 4 of the appropriate maintenance and service manual.**
5. Install the center dash panel in the reverse order of removal. Be sure the key switch terminals cannot touch the frame and that the panel is properly seated and snapped in place.
6. Connect battery cables, positive (+) cable first, and tighten hardware to 12 ft-lb (16 N·m). **See Figure 10-1, Section 10, Page 10-3.** Coat terminals with Battery Terminal Protector Spray (CCI P/N 1014305) to minimize corrosion.

PARK BRAKE LIMIT SWITCH

See General Warning, Section 10, Page 10-1.

Testing the Park Brake Limit Switch

See Test Procedure 38, Section 11, Page 11-51.

Park Brake Limit Switch Removal

1. Disconnect the battery cables as instructed. **See WARNING "To avoid unintentionally starting..." in General Warning, Section 10, Page 10-1.**
2. Remove the pad from the brake pedal by removing four no. 10 screws and sliding the pad to the right.
3. Remove the screws (2) securing the wire terminals to the park brake switch (3) **(Figure 12-39, Page 12-34)**.
4. Remove the hex nuts (5) securing the limit switch to the brake pedal and remove the switch.

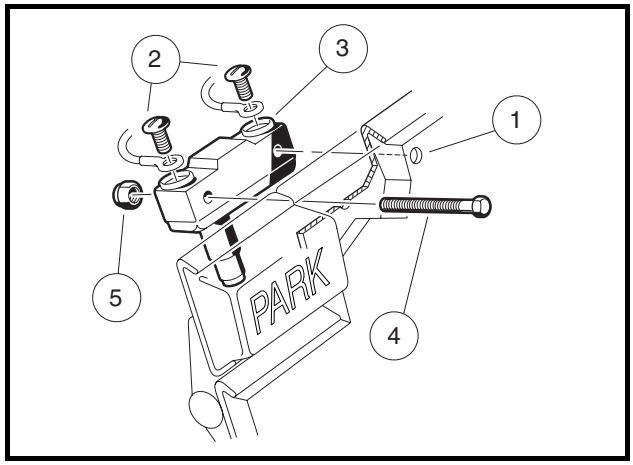

Figure 12-39 Park Brake Limit Switch

Park Brake Limit Switch Installation

1. Secure the switch to the brake pedal with lock nuts (5) and hex-head machine screws (4) **(Figure 12-39, Page 12-34)**. Set the gap between the switch and the top of the park brake rod to no more than 0.030 of an inch (0.762 mm) **(Figure 12-40, Page 12-35)**. Tighten the mounting hardware to 10 in-lb (1.1 N·m).

2. Connect the 16-gauge orange/white wire to the NC terminal and the 16-gauge brown wire to the COM terminal. Tighten the screws to 10 in-lb (1.1 N·m).
3. Install pad to brake pedal, tightening the screws until the pad is secure.
4. Connect battery cables, positive (+) cable first, and tighten hardware to 12 ft-lb (16 N·m). **See Figure 10-1, Section 10, Page 10-3.** Coat terminals with Battery Terminal Protector Spray (CCI P/N 1014305) to minimize corrosion.

BRAKE PEDAL LIMIT SWITCH

See General Warning, Section 10, Page 10-1.

Testing the Brake Pedal Limit Switch

See Test Procedure 39, Section 11, Page 11-51.

Brake Pedal Limit Switch Removal

1. Disconnect the battery cables as instructed. **See WARNING "To avoid unintentionally starting..." in General Warning, Section 10, Page 10-1.**
2. Remove the hardware (4 and 5) securing the brake switch (2) to the bracket (3) **(Figure 12-41, Page 12-35)**.
3. Disconnect the wires from the switch and remove the switch.

Brake Pedal Limit Switch Installation

1. Connect the 6-gauge orange/white wire to the NC terminal and the 16-gauge green/white wire to the COM terminal. Tighten the screws (1) to 10 in-lb (1.1 N·m).
2. Secure the switch to the bracket with lock nuts (4) and hex-head machine screws (5) **(Figure 12-41, Page 12-35)**. Tighten the mounting hardware to 10 in-lb (1.1 N·m).
3. Connect battery cables, positive (+) cable first, and tighten hardware to 12 ft-lb (16 N·m). **See Figure 10-1, Section 10, Page 10-3.** Coat terminals with Battery Terminal Protector Spray (CCI P/N 1014305) to minimize corrosion.

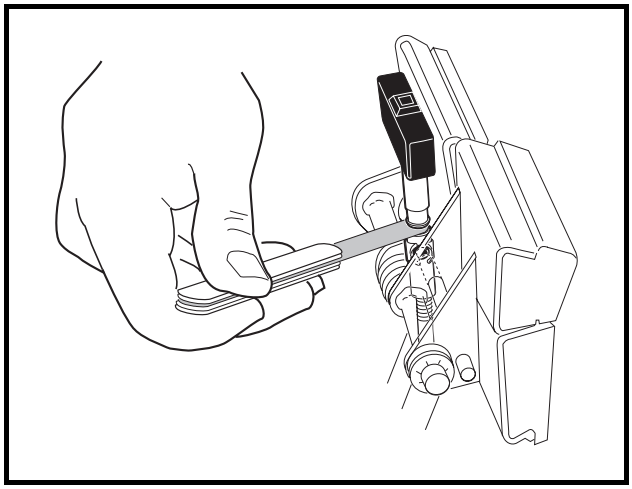

Figure 12-40 Mount Park Brake Limit Switch to Brake Pedal Using Feeler Gauge

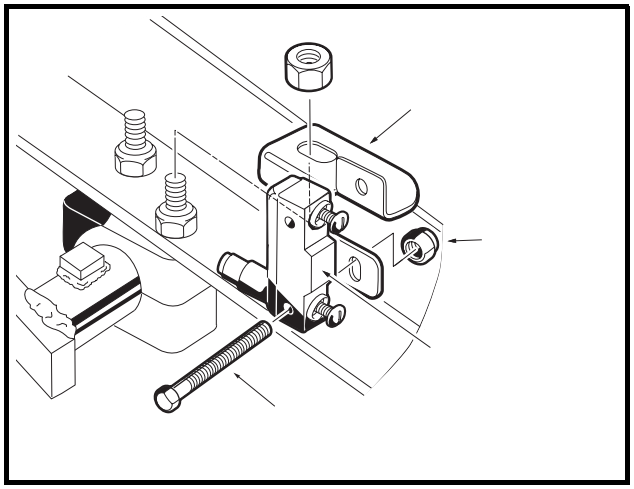

Figure 12-41 Mount Brake Pedal Limit Switch to Brake Pedal Mounting Bracket

HORN

See General Warning, Section 10, Page 10-1.

Testing the Horn

See Test Procedure 40, Section 11, Page 11-52.

Horn Removal

1. Disconnect the battery cables as instructed. **See WARNING "To avoid unintentionally starting..." in General Warning, Section 10, Page 10-1.**
2. Remove the center dash panel. **See Key Switch Removal on page 12-13.**
3. Disconnect the orange wire (1) from the horn (2) **(Figure 12-42, Page 12-37)**. Do not allow wire to touch the frame.
4. Remove the hex nut (3), lock washer (4) and the black wire (5) from the mounting stud on the front of the horn.
5. Remove the horn from the vehicle.

Horn Installation

1. Install the orange wire onto the horn. Slip the black wire ring terminal onto the mounting stud.
2. Install the horn stud through the mounting bracket (6). Install the lock washer and nut onto the mounting stud to tighten the horn to 8 ft-lb. (10.8 N·m) **(Figure 12-42, Page 12-37)**.

NOTE: *Shoulder on nut fits into hole in mounting bracket.*

3. Connect battery cables, positive (+) cable first, and tighten hardware to 12 ft-lb (16 N·m). **See Figure 10-1, Section 10, Page 10-3.** Coat terminals with Battery Terminal Protector Spray (CCI P/N 1014305) to minimize corrosion.

HORN SWITCH

See General Warning, Section 10, Page 10-1.

Testing the Horn Switch

See Test Procedure 41, Section 11, Page 11-53.

Horn Switch Removal

1. Disconnect the battery cables as instructed. **See WARNING "To avoid unintentionally starting..." in General Warning, Section 10, Page 10-1.**
2. Unscrew the rubber cap (1) from the horn switch (2) **(Figure 12-43, Page 12-37)**.
3. Disconnect the wires from the two pin connector on the horn switch.

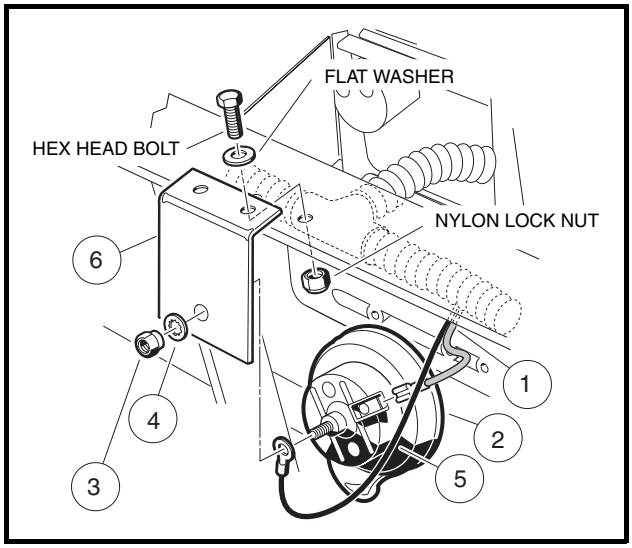

Figure 12-42 Horn Assembly

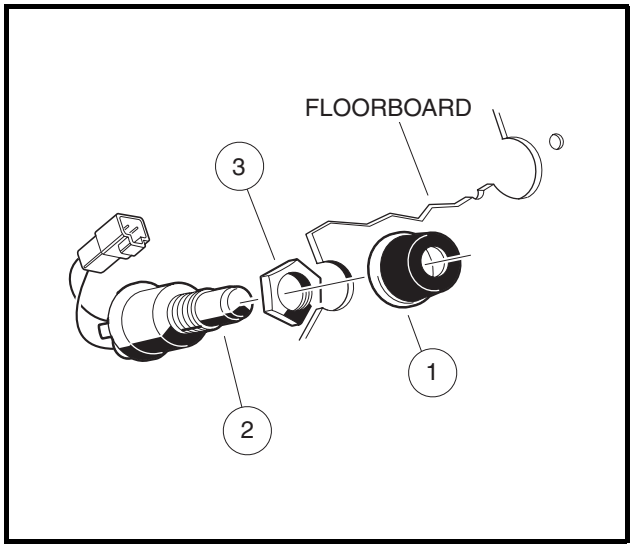

Figure 12-43 Horn Switch Assembly

Horn Switch Installation

1. Install the jam nut (3) until it makes contact with the body of the horn switch.
2. Insert the horn switch into the hole from beneath the floorboard. Screw the rubber cap onto the switch from above the floorboard until the push-button tip of the switch extends through the hole in the rubber cap. Tighten the jam nut to 22 in-lb (2.5 N·m) **(Figure 12-43, Page 12-37)**.
3. Connect wire harness at the connector on the horn switch.
4. Connect battery cables, positive (+) cable first, and tighten hardware to 12 ft-lb (16 N·m). **See Figure 10-1, Section 10, Page 10-3.** Coat terminals with Battery Terminal Protector Spray (CCI P/N 1014305) to minimize corrosion.

BATTERY

See General Warning, Section 10, Page 10-1.

⚠ DANGER

- **Due to the danger of an exploding battery, wear a full face shield and rubber gloves when working around a battery.**
- **Battery – Explosive gases! Do not smoke. Keep sparks and flames away from the vehicle and service area. Ventilate when charging or operating vehicle in an enclosed area. Wear a full face shield and rubber gloves when working on or near batteries.**
- **Battery – Poison! Contains acid! Causes severe burns. Avoid contact with skin, eyes, or clothing. Antidotes:**
  - **External: Flush with water. Call a physician immediately.**
  - **Internal: Drink large quantities of milk or water. Follow with milk of magnesia or vegetable oil. Call a physician immediately.**
  - **Eyes: Flush with water for 15 minutes. Call a physician immediately.**

General Information

See preceding DANGER statement.

Club Car gasoline vehicles are equipped with 12-volt, low-maintenance batteries. When changing a 12-volt battery in any Club Car gasoline-powered vehicle, the same size battery with adequate amperage ratings should be used as a replacement.

Club Car recommends a group 70, side-post battery (CCI P/N 1012328), with a 650 cranking amp rating at 32 °F (0 °C) (500 CCA at 0 °F (-17.8 °C)) and a reserve capacity of at least 105 minutes. The group 70 classification indicates battery size: 8-1/4 inches W x 6-1/2 inches D x 7-1/4 inches H (21.0 cm W x 16.5cm D x 18.4 cm H). It is important to use the proper size to ensure that the battery clamp will fit correctly.

Testing the Battery

See Section 11, Test Procedure 1, Page 11-15 and Test Procedure 25, Page 11-37.

Preventive Maintenance

To keep the battery in good operating condition, follow these steps on a regular basis.

1. Any corrosion build-up on or around the battery should be removed immediately. Post connections should be clean and tight. Any frayed or worn wires should be replaced. After all cables have been connected and properly tightened to 12 ft-lb (16 N·m), coat terminals with Battery Terminal Protector Spray (CCI P/N 1014305) to prevent future corrosion.
2. The battery should be kept clean and dry to minimize self-discharge. Any dirt, grime or acid spillage should be removed. Wash the battery with a bristle brush using water and bicarbonate of soda (1 cup (237 mL) baking soda per 1 gallon (3.8 L) of water). Rinse with water. Do not allow solution to enter battery through the vent cap holes. **See Self-Discharge on page 12-38.**
3. Maintain proper water level. **See Water Level on page 12-38.**
4. Check battery periodically to see that it is in a full state of charge. **See Charging the Battery on page 12-40.**
5. Keep battery hold-down clamp tight. **See Vibration Damage on page 12-39.**

Self-Discharge

Dirt and battery acid can provide a path for a small current draw that slowly discharges the battery. To minimize self-discharge, the battery should always be kept clean.

Hot weather also has an effect on a battery's self-discharge rate. The higher the temperature, the quicker a battery will discharge. In hotter climates the battery should be checked more often. When storing the battery, keep in a cool place. **See Battery Storage on page 12-41.**

Water Level

The water level should be checked semi-annually to be sure water is at its proper level **(Figure 12-44, Page 12-39)**. Never allow the water level to fall below the tops of the plates because this will cause the exposed part of the plate to become permanently inactive. Check the water level more frequently in hot weather or when the battery becomes old.

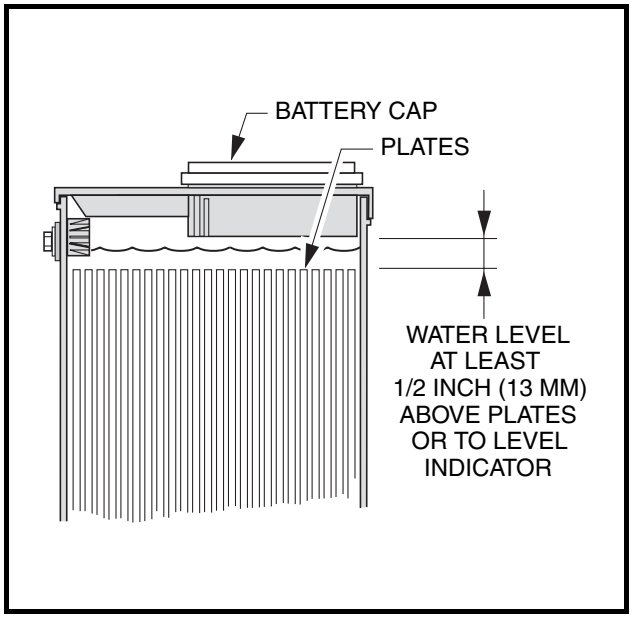

Figure 12-44 Battery Water Level

Vibration Damage

The battery hold-down clamp should always be tight enough to keep the battery from bouncing. Battery life may be severely shortened if the clamp is too loose. Excessive vibration shortens the life of the battery. It may also cause acid to leak out of the vent caps and corrosion to build up on surrounding metal parts. The acid which is lost reduces the capacity of the battery and cannot be replaced.

Mineral Content

For the longest battery life, distilled water should be used in the battery; however, if tap water is going to be used, contact your local water department to be sure mineral contents are below the levels listed in the following table. **See following NOTE.**

NOTE: *Contact your local water department for mineral content analysis.*

IMPURITY	ALLOWABLE CONTENT (PARTS PER MILLION)
Suspended matter	Trace
Total solids	100.0
Calcium and Magnesium Oxides	40.0
Iron	5.0
Ammonia	8.0
Organic matter	50.0
Nitrates	10.0
Nitrites	5.0
Chloride	5.0

Battery Removal

See General Warning, Section 10, Page 10-1.

1. Disconnect the battery cables as instructed. **See WARNING "To avoid unintentionally starting..." in General Warning, Section 10, Page 10-1.**
2. Remove the battery hold-down clamp from the battery.
3. Lift the battery from the vehicle. **See following WARNING.**

⚠ WARNING

- **Keep the battery in an upright position to prevent electrolyte leakage. Tipping the battery beyond a 45° angle in any direction can allow a small amount of electrolyte to leak out of the vent hole. Do not exceed this 45° angle when lifting, carrying or installing battery. The battery acid could cause severe personal injury when accidentally coming in contact with the skin or eyes, and could damage clothing.**

Charging the Battery

See General Warning, Section 10, Page 10-1.

1. Charge the battery using an automotive type 12-volt battery charger. Follow all warnings and procedures supplied by the battery charger manufacturer.
2. Attach the positive (+) charger cable to the positive (+) battery post.
3. Attach the negative (–) charger cable to the negative (–) battery post.
4. The battery may be charged with a slow charge (3-10 amps) or a fast charge (20-30 amps). Charge until the specific gravity reaches 1.250. **See following WARNING.**

⚠ WARNING

- **If the battery case feels hot (approximately 125 °F (52 °C) or more), emits gases, or fluid boils from vents, stop charging immediately. Failure to stop charging battery when any of these conditions are present could result in an explosion, personal injury and/or damage to the battery.**
- **Do not disconnect the charger DC leads from the battery when the charger is on. The resulting arcing between the DC leads and battery post could cause an explosion.**
- **If the charger must be stopped, disconnect the AC supply cord from the wall outlet before disconnecting the DC leads from the battery. Allow the battery to cool to room temperature and resume charging battery at a lower amp rate.**

Battery Installation

See General Warning, Section 10, Page 10-1. See also DANGER on page 12-37.

1. Place the battery into the vehicle. Make sure the battery posts are facing the engine.
2. Secure the battery to the vehicle with the clamp. Install bolt, washer and lock nut and tighten to 12 ft-lb (16 N·m).
3. Connect battery cables, positive (+) cable first, and tighten hardware to 12 ft-lb (16 N·m). **See Figure 10-1, Section 10, Page 10-3.** Coat terminals with Battery Terminal Protector Spray (CCI P/N 1014305) to minimize corrosion.

Battery Storage

See General Warning, Section 10, Page 10-1. See also DANGER on page 12-37.

1. Keep the battery clean and free of corrosion. **See Preventive Maintenance on page 12-38.**
2. The battery cables should be disconnected from the battery so the battery can be connected to the charger. The battery can be left in the vehicle.
3. Fully charge the battery prior to storage.
4. Store in a cool area. The colder the area in which the battery is stored, the less the battery will self-discharge. A battery stored at 0 °F (-17.8 °C) will discharge very little over a four-month period. A battery stored at 80 °F (27 °C) will have to be recharged every few weeks.
5. Check the state of charge periodically. A battery that is discharged and left in a cold environment can freeze and crack. If the specific gravity drops below 1.220, the battery should be recharged. **See following WARNING.**

⚠ WARNING

- **If the battery is frozen or the container is bulged, discard battery. A frozen battery can explode.**

6. The frequency of recharging required depends on the temperature of the storage area, but it is recommended that the battery be monitored for state of charge every month. Also, if the storage area is unheated in a cold climate and recharging is required, it is recommended that the area be heated to at least 60 °F (16 °C) prior to charging. The battery will not charge effectively in cold temperatures for the same reasons that it does not discharge as rapidly in cold temperatures.

Charging a Dead Battery

See General Warning, Section 10, Page 10-1. See also DANGER on page 12-37.

The vehicle is equipped with a starter/generator. The generator is not designed to charge a dead battery. If the vehicle battery has become discharged, it must be charged using a properly rated automotive type charger.

⚠ WARNING

- **Do not jump-start a dead battery using another battery and jumper cables.**

GROUND CABLES

Testing the Ground Cables

See Test Procedure 3, Section 11, Page 11-18.

SECTION 13 – FE350 ENGINE

⚠ DANGER

- **See General Warning, Section 10, Page 10-1.**

⚠ WARNING

- **See General Warning, Section 10, Page 10-1.**

GENERAL INFORMATION

See General Warning, Section 10, Page 10-1.

All Club Car gasoline vehicles are powered by 4-cycle, overhead valve, single cylinder, air-cooled engines. The 4-cycle engine has an oil reservoir (crankcase) similar to automobiles, trucks, aircraft, heavy equipment, machinery and other applications designed for reliable heavy-duty service. The engine has two major component assemblies: the cylinder assembly and the crankcase assembly. **See following NOTE.**

NOTE: *Engine rotation is clockwise as viewed from the clutch side of the engine.*

This section contains information for removing and replacing the FE290 engine. For complete instruction on engine disassembly, repair, rebuilding, and reassembly, see the Engines and Drivetrain Components, Repair and Rebuild Manual (CCI P/N 102396501).

BEFORE SERVICING

Carefully read the applicable information and instructions before beginning engine service. Diagrams, DANGER, WARNING, CAUTION and NOTE statements and detailed descriptions have been included wherever necessary. Anyone attempting engine service should have knowledge and experience in small engine service and repair.

ENGINE ROTATION

When turning the crankshaft by hand, always turn it **clockwise** as viewed from the clutch side of the engine. This will ensure proper adjustments.

SPARK PLUG

Spark plugs are selected to suit specific engine design and vehicle operating conditions. The spark plug (CCI P/N 101881101) is designed to give maximum life and efficient combustion of fuel. The spark gap is 0.027-0.031 inches (0.69-0.79 mm).

Spark Plug Removal

See General Warning, Section 10, Page 10-1.

⚠ CAUTION

- **Before removal and disassembly, clean the engine.**

Remove all dirt from plug base in the cylinder head before removing plug. Use a 13/16-inch deep well socket wrench or 13/16-inch spark plug wrench to loosen the plug.

Spark Plug Cleaning, Inspection and Repair

Examine the plug **(Figure 13-1, Page 13-2)**. The deposits on the plug base and electrode are an indication of the correct heat range and efficiency as well as a guide to the general condition of the engine, fuel and air mixture and ignition system. If all of the above conditions are proper, the spark plug should be a light brown color. There should be no bridging between the electrode and base. The electrode should not be eroded. Black color, excessive carbon, and/or a wet plug indicate a too rich condition. White, burned or melted electrodes indicate a too lean condition or pre-ignition. Oily deposits on the plug electrode are an indication of worn rings, valve guides, cylinder wall, etc. Also examine the spark plug wire. Remove rubber boot and inspect internal spring for damage. Inspect spark plug wire for damage and be sure spring coil is securely attached to spark plug. **See following WARNING.**

⚠ WARNING

- **Remove spark plug wire to avoid accidental start up of the engine when servicing vehicle. To avoid ignition of fuel and serious personal injury or death, never try to start the engine with plug removed from engine.**

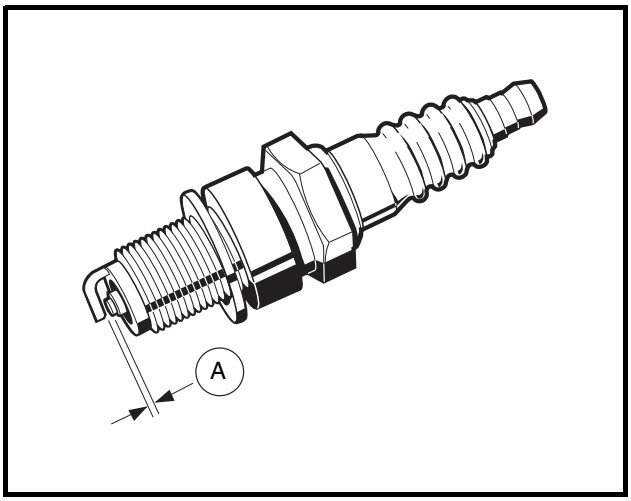

Figure 13-1 Spark Plug

Testing the Spark Plug

Check the sparking ability of a cleaned and properly gapped plug on a sparking comparator if possible. Spark should be blue and strong and able to jump a 5/16-inch (8 mm) gap.

Setting the Spark Gap

1. Before setting the spark gap on a used plug, pass a contact point file between the electrodes to produce flat, parallel surfaces to facilitate accurate gauging.
2. Use a wire type gauge. Bend the outside or ground electrode so only a slight drag on the gauge is felt when passing it between the electrode. Never make an adjustment by bending the center electrode. Set gap (A) to 0.027-0.031 inches (0.69-0.79 mm) **(Figure 13-1, Page 13-2)**.

Spark Plug Installation

NOTE: *Before installing the plug, check the condition of the threads in the cylinder head. Soften deposits in cylinder head threads with penetrating oil and clean the threads with a tap if necessary.*

1. Install the spark plug by threading it in until finger tight, then tighten the spark plug to 20 ft-lb (27 N·m).

CYLINDER HEAD

See General Warning, Section 10, Page 10-1.

GENERAL INFORMATION

Test cylinder compression using a standard compression tester. Low compression would normally indicate a problem in the cylinder assembly such as defective rings, gaskets, etc. Compression should be:

- **Key-Start engines:** Key-start engines are equipped with an automatic compression release valve (ACR). This valve releases compression pressure at normal cranking RPM, resulting in lower compression. At a normal cranking speed of 550-600 RPM, the compression should typically be 71 psi. This value could vary slightly depending on wear of components affecting compression.
- **Pedal-Start engines:** Pedal-start engines are not equipped with an automatic compression release valve (ACR). At a normal cranking speed of 550-600 RPM, the compression should typically be 156 psi. This value could vary slightly depending on wear of components affecting compression.

See the Engines and Drivetrain Components, Repair and Rebuild Manual for inspection and repair.

BREATHER VALVE (REED VALVE)

General Information

The function of the breather is to create a vacuum in the crankcase, which prevents oil from being forced out of the engine through the piston rings, oil seals or gaskets.

The breather has a reed valve which limits the direction of air flow caused by the piston moving up and down. Air can flow out of the crankcase, but the one-way reed valve blocks return flow. It thus maintains a vacuum in the crankcase.

Oil laden air in the crankcase passes through the reed valve and expands into the rocker chamber. In the rocker chamber most oil separates from the air and drains back to the crankcase. The air passes through a tube and vents to the intake manifold.

VALVE CLEARANCE CHECK AND ADJUSTMENT

No clearance check and no clearance adjustments are required. The FE350 engine is equipped with hydraulic lifters that automatically eliminate all clearance in the valve train components.

CRANKCASE

See General Warning, Section 10, Page 10-1.

ENGINE REMOVAL

To perform repairs on crankcase components, the engine must be removed from the vehicle.

⚠ CAUTION

- **Before removal and disassembly, clean the engine.**

1. Remove the powertrain. **See Unitized Transaxle Removal, Section 16, Page 16-7. See following NOTE.**

NOTE: *The crankshaft has left-hand threads at the clutch mounting hole.*

2. Remove starter/generator. **See Starter/Generator Removal, Section 12, Page 12-1.**
3. Remove drive belt. **See Drive Belt Removal, Section 17, Page 17-3.**
4. Remove drive clutch. **See Drive Clutch Removal, Section 17, Page 17-4. See also following NOTE.**
5. Remove muffler. **See Muffler Removal, Section 15, Page 15-1.**
6. Remove engine mounting hardware (items 1, 2, 5 and 6) **(Figure 13-2, Page 13-5)**.
7. Lift engine from the mounting plate.
8. Remove crankcase oil drain plug and filler tube. Tip the engine slightly to allow all of the oil to drain from the crankcase. Dispose of engine oil properly.

CRANKCASE COVER REMOVAL

1. Remove yellow jumper wire (11) from cord connector (12) **(Figure 13-3, Page 13-5)**.
2. Remove nuts and clamps at two-ended bolts (1 and 2) **(Figure 13-4, Page 13-5)**.
3. Remove eight bolts (3) and remove the crankcase cover (4) **(Figure 13-4, Page 13-5)**. **See following NOTE.**

NOTE: *If the crankcase cover sticks, tap lightly with a plastic mallet on alternate sides near the dowel pins (5)* ***(Figure 13-4, Page 13-5)****.*

4. Remove the crankcase cover gasket completely. It may stick to the flanged surface of the crankcase.

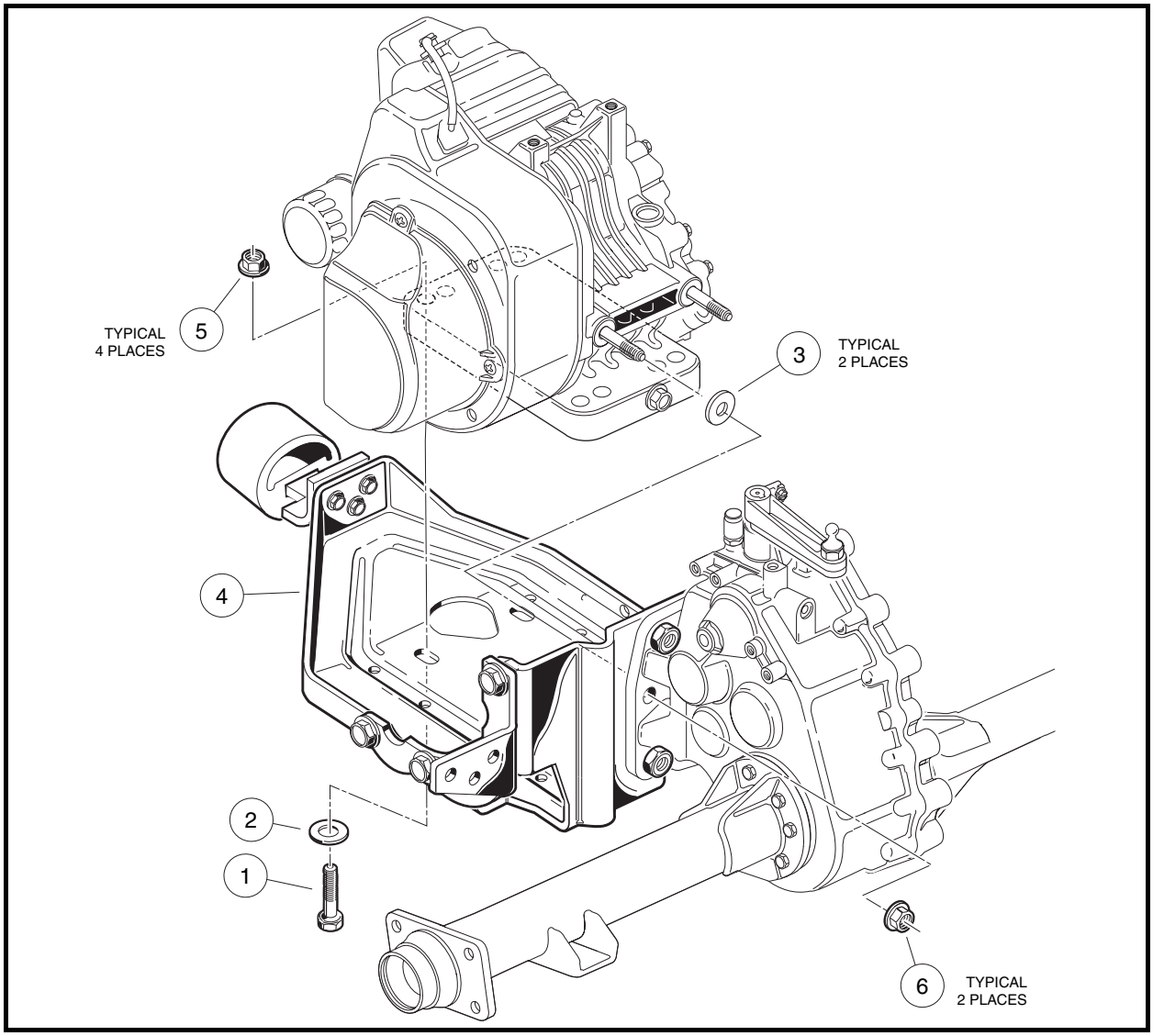

Figure 13-2 Engine Mounting Plate

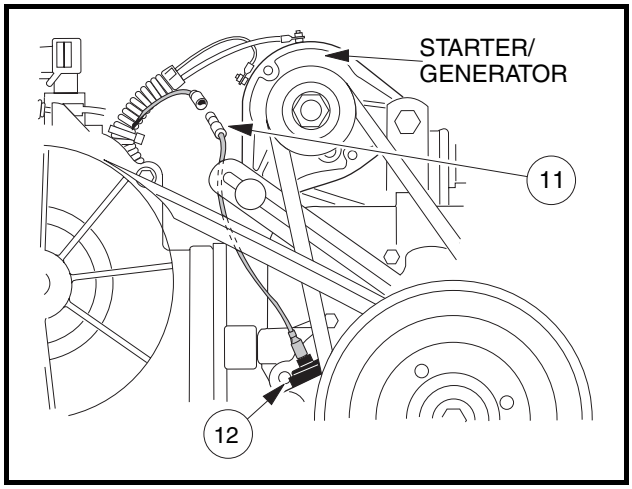

Figure 13-3 Oil Level Sensor Wire

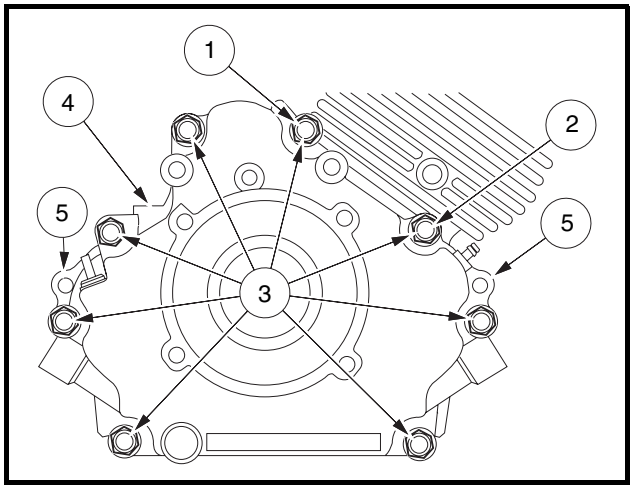

Figure 13-4 Crankcase Cover

OIL LEVEL SENSOR

Testing the Oil Level Sensor

See Test Procedure 23, Section 11, Page 11-37.

Oil Level Sensor Removal

1. If not already removed, remove crankcase cover. **See Crankcase Cover Removal on page 13-4.**
2. Disconnect the oil level sensor wire (2) from the cord connection (1) **(Figure 13-5, Page 13-6)**.
3. Remove the screw (3) from the wire clamp (4).
4. Remove the two mounting screws from the inside of the crankcase cover and remove the oil level sensor and bracket.
5. If necessary, remove the three screws (7) that hold the sensor to the bracket (5).

Oil Level Sensor Installation

1. If the oil level sensor was removed from the bracket, install sensor (6) into bracket (5) and secure with three screws (7) **(Figure 13-5, Page 13-6)**. Tighten to 17 in-lb (1.9 N·m).
2. Position the sensor and bracket on inside of crankcase and install two mounting screws.
3. Connect sensor wire (2) to cord connector (1) **(Figure 13-5, Page 13-6)**.
4. Install screw (3) through wire clamp and into crankcase cover. Tighten to 30 in-lb (3.4 N·m).

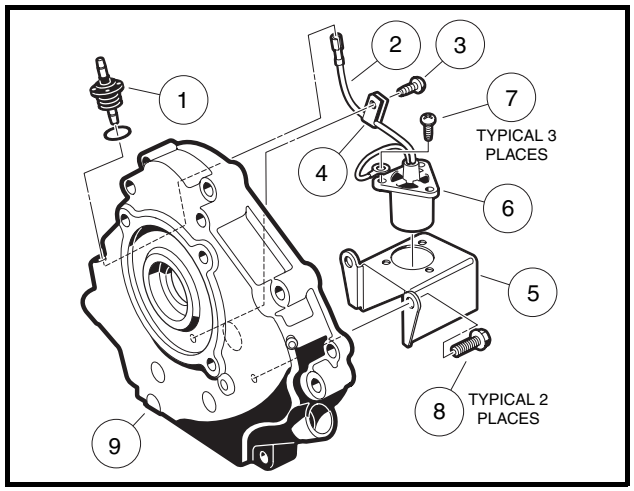

Figure 13-5 Oil Level Sensor

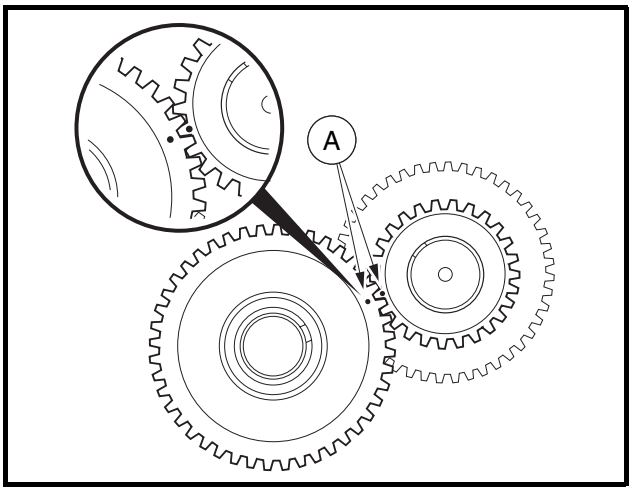

Figure 13-6 Timing Mark Alignment

CRANKCASE COVER INSTALLATION

⚠ CAUTION

- **Before assembly, make sure parts are clean.**
- **Do not reuse the gasket. Install a new one.**
- **Install and tighten crankcase cover bolts as instructed. Failure to do so could cause the cover to become warped.**

1. Clean the gasket surfaces on the crankcase cover to fit a new gasket during installation and inspect the oil seal for wear and damage.

2. Install crankcase cover. Using HANDS ONLY, seat cover completely against the crankcase. If the cover will not seat, the camshaft is not installed correctly.
3. Install and finger tighten evenly the eight cover mounting bolts **(Figure 13-7, Page 13-7)**.
4. Tighten the cover mounting bolts in two steps. First, in the sequence shown, tighten all eight bolts to approximately 130 in-lb (14 N·m). Then, repeating the sequence, tighten them to 250 in-lb (28.2 N·m).
5. Connect the yellow jumper wire (11) to the cord connector (12) **(Figure 13-3, Page 13-5)**.

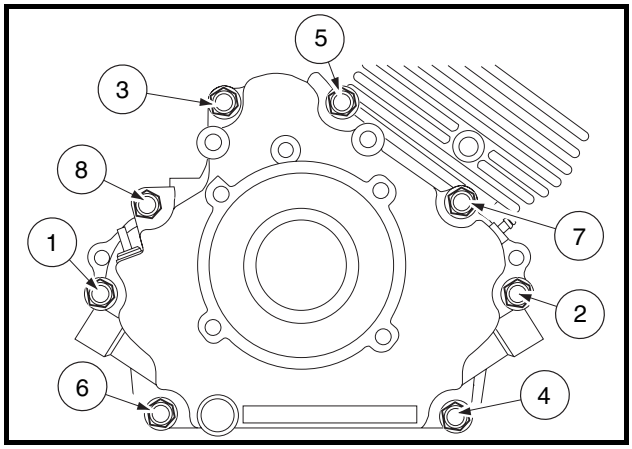

Figure 13-7 Crankcase Cover Installation

IGNITION COIL AND FLYWHEEL

See General Warning, Section 10, Page 10-1.

Ignition Coil and Flywheel Removal

1. Loosen three screws and remove the remaining four screws attaching the flywheel housing as shown, then remove the housing **(Figure 13-8, Page 13-7).**
2. Disconnect the ignition coil (1) from its primary lead wire at the connector (2). Remove the two bolts (3) and take out the ignition coil **(Figure 13-9, Page 13-7)**.

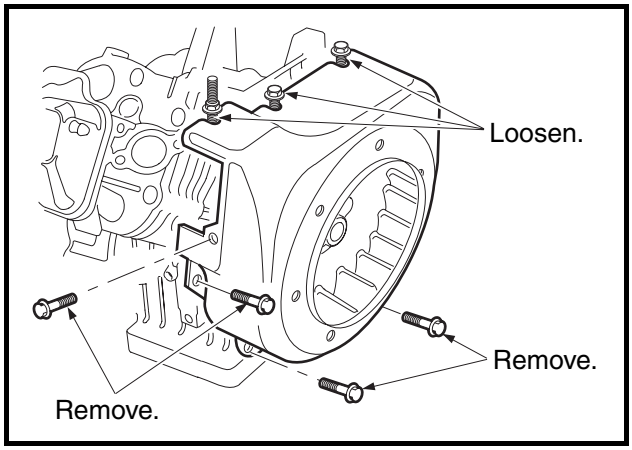

Figure 13-8 Flywheel Housing

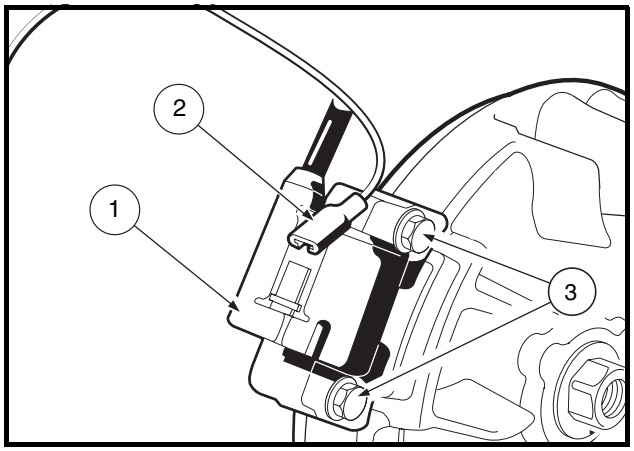

Figure 13-9 Ignition Coil

Ignition Coil and Flywheel Removal, Continued:

3. Hold the flywheel (4), not the fan (7), with a strap wrench (5) and, using a 25 mm socket, remove the flywheel nut (and flat washer) by turning it counterclockwise **(Figure 13-10, Page 13-8)**. **See following CAUTION.**

⚠ CAUTION

- **The flywheel nut has right-hand threads. Turn it clockwise to tighten, or counterclockwise to loosen.**
- **Do not damage the fan blades with the strap wrench. Do not place screwdriver or pry bar in the fan blades.**

4. Remove the flywheel with a puller (CCI P/N 1016627).
5. Remove the flywheel key from its groove.

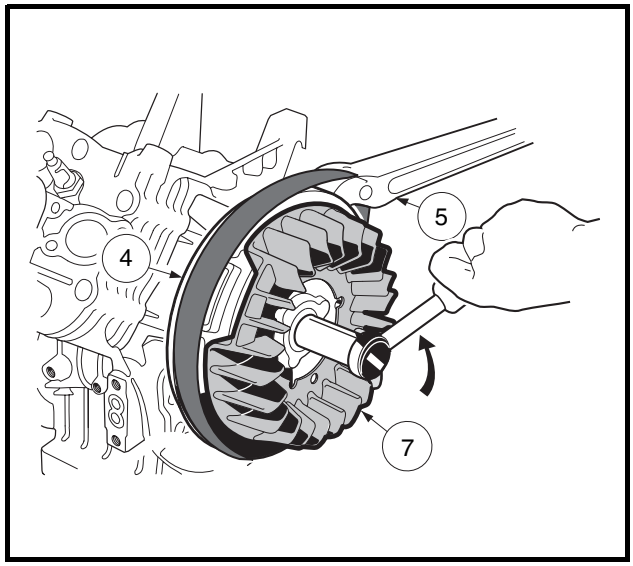

Figure 13-10 Flywheel Nut

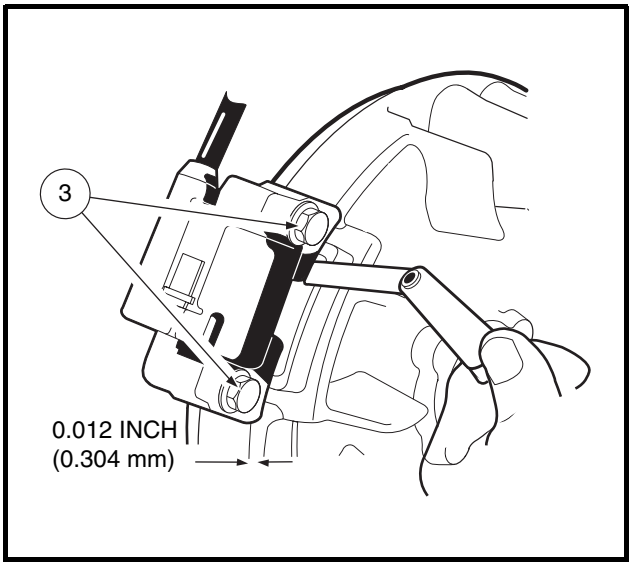

Figure 13-11 Adjust Ignition Coil Air Gap

Flywheel Installation

See Flywheel Installation on page 13-9.

Ignition Coil Inspection and Repair

See Test Procedure 16, Section 11, Page 11-28.

Ignition Coil Installation

1. Installation is the reverse of removal.
2. While tightening the two bolts (3), use a bronze feeler gauge to adjust the ignition coil air gap to 0.012 inch (0.304 mm) **(Figure 13-11, Page 13-8)**.
3. Tighten the two ignition coil bolts to 30 in-lb (3.4 N·m).

Crankcase Cover Installation

See Crankcase Cover Installation on page 13-6.

FLYWHEEL INSTALLATION

1. Insert the flywheel key into the keyway in the crankshaft. Then align the keyway in the flywheel to the key and push the flywheel and fan assembly onto the crankshaft until it seats. Install flat washer and nut finger tight.
2. Use a strap wrench (3) to keep the flywheel and fan assembly (1) from turning while tightening the flywheel nut to 63 ft-lb (85.4 N·m) **(Figure 13-12, Page 13-9)**. **See following CAUTION.**

⚠ CAUTION

- **The flywheel nut has right-hand threads. Turn it clockwise to tighten, or counterclockwise to loosen.**
- **Be careful not to damage the fan blades. Use a strap wrench to hold flywheel. Do not place screwdriver or pry bar between fan blades.**

3. Install the fan housing and tighten the screws to 90 in-lbs (10 N·m).

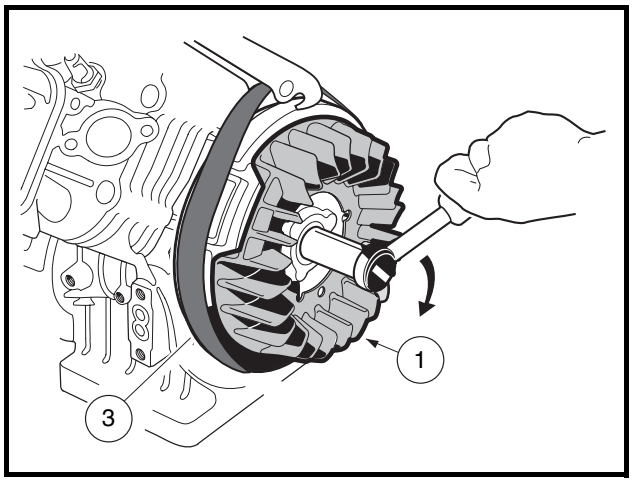

Figure 13-12 Fan and Flywheel Assembly

ENGINE INSTALLATION

See General Warning, Section 10, Page 10-1.

1. Place engine onto engine mounting plate and tighten the mounting hardware (1, 2 and 5) to 13 ft-lb (17.7 N·m). Tighten nuts (6) to 17 ft-lb (23.1 N·m) **(Figure 13-2, Page 13-5)**.
2. Install drive clutch. **See Drive Clutch Installation, Section 17, Page 17-12.**
3. Install drive belt. **See Drive Belt Installation, Section 17, Page 17-3.**
4. Install muffler. **See Muffler Installation, Section 15, Page 15-1.**
5. Install starter/generator and belt. **See Starter/Generator Installation, Section 12, Page 12-10.**
6. Install the powertrain. **See Unitized Transaxle Installation, Section 16, Page 16-16.**

Engine Installation, Continued:

7. Install oil drain plug in the crankcase and tighten to 20 ft-lb (27.1 N·m). Apply a light film of oil on the seal of a new oil filter and install the filter on the crankcase. Fill the crankcase to the proper level with the correct type of oil. This engine should be regarded as a new engine for next scheduled oil change. **See Section 10 – Periodic Maintenance.**

8. Check all hardware for proper torque/tightness.

9. Check engine oil level.

   9.1. With vehicle on a level surface, remove dip stick and clean with cloth **(Figure 13-13, Page 13-10)**.

   9.2. Reinsert dip stick until fully seated.

   9.3. Oil must be in the SAFE LEVEL range.

⚠ CAUTION

- **Do not overfill with oil.**

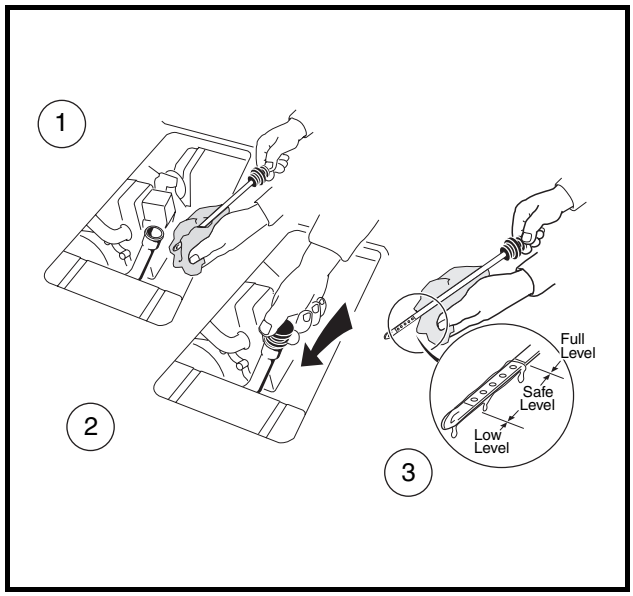

Figure 13-13 Check Engine Oil Level

10. Install a new or cleaned spark plug, gapped to 0.027-0.031 inch (0.69-0.79 mm), and connect plug wire to plug.

11. Connect battery cables, positive (+) cable first, and tighten hardware to 12 ft-lb (16 N·m). **See Figure 10-1, Section 10, Page 10-3.** Coat terminals with Battery Terminal Protector Spray (CCI P/N 1014305) to minimize corrosion.

12. Adjust the engine RPM setting. **See Engine RPM Adjustment, Section 14, Page 14-11.**

13. If initial checks indicate the engine is functional, place the neutral lockout cam in OPERATE position.

14. Test-drive vehicle to ensure all systems are functional and correctly adjusted.

TORQUE SPECIFICATIONS

ITEM	SIZE	LIMITS
Flywheel retaining nut	M18	100 ft-lb (135 N·m)
Crankcase cover to block bolts	M8	22 ft-lb (31 N·m)
Starter/Generator bracket to block bolts	M8	16.5 ft-lb (23 N·m)
Oil drain plug	M14	16.5 ft-lb (23 N·m)
Fan housing screws	M6	90 in-lb (10 N·m)
Fan shroud screws	M6	25 in-lb (2.8 N·m)
Bolts marked with “4” (when used with nuts)	M8 M6 M5	130 in-lb (15 N·m) 50 in-lb (5.9 N·m) 30 in-lb (3.4 N·m)

ADJUSTMENTS AND SETTINGS

ITEM	LIMITS
Spark plug gap (standard)	0.027 to 0.031 in. (0.69 to 0.79 mm)
Ignition coil air gap (standard)	0.012 in. (0.304 mm)
Compression pressure (min.) (with automatic compression release)	71 psi (483 kPa)
Engine RPM	3170 (±30) RPM (Turf 2 with 2-wheel brakes) 3170 (±30) RPM (Turf 2 with 4-wheel brakes) 3050 (±30) RPM (Turf 2 with 4-wheel brakes and PRC*) 3050 (±30) RPM (Turf 6) 3170 (±30) RPM (Carryall 2) 3650 (±30) RPM (Carryall 2 Plus) 3050 (±30) RPM (Carryall 2 Plus with PRC*) 3050 (±30) RPM (Carryall 6) 3050 (±30) RPM (Villager 6 and 8) 3050 (±30) RPM (TransPorter 4 and 6)

* Portable Refreshment Center or Cafe Express

SECTION 14 – FUEL SYSTEM

⚠ DANGER

- **See General Warning, Section 10, Page 10-1.**

⚠ WARNING

- **See General Warning, Section 10, Page 10-1.**

GENERAL INFORMATION

The engine is equipped with a float bowl type carburetor with fixed jets that require no adjustment. The carburetor atomizes the fuel, mixes it with air, and feeds the combustible mixture into the cylinder.

CARBURETOR

See General Warning, Section 10, Page 10-1.

Before suspecting the carburetor as the cause of poor engine performance, make sure the fuel and ignition systems are in proper operating condition. Check the following items:

- Spark plug and gap condition. **See Spark Plug, Section 13, Page 13-1.**
- Air filter element. **See Air Filter on page 14-17.**
- Fuel filters. **See Fuel Filters on page 14-18.**
- Choke and air intake system (for restriction of air flow). **See Choke and Air Intake System on page 14-12.**
- Fuel pump. **See Fuel Pump on page 14-20.**
- Fuel lines (from fuel tank to filter to pump to filter to carburetor). **See Fuel Lines on page 14-26.**
- Exhaust system (for restrictions). **See Section 15 – Exhaust System.**

If the carburetor floods or leaks fuel at the float bowl gasket or carburetor vent tube, the fuel inlet valve could be worn or dirty. Another cause of this condition may be a damaged float that has filled with fuel and sinks.

For elevations above 3000 feet, main jets other than standard operate more effectively. The following chart lists the elevation ratings for various jet sizes. No adjustment is required for the pilot jet. If the vehicle idles roughly, turn the pilot air screw out until the vehicle idles smoothly.

MAIN JET ELEVATION/SIZE CHART

ALTITUDE	FE350 ENGINE MAIN JET SIZE
0-3000 ft. (0-914.4 m)	85
3000-5000 ft. (914.4-1524 m)	82
5000-8000 ft. (1524-2438.4 m)	80
8000-10,000 ft. (2438.4-3048 m)	78
10,000 ft. and over (3048 m and over)	75

CHANGING THE MAIN JET

See General Warning, Section 10, Page 10-1.

1. Remove the carburetor.
   1.1. Turn fuel shut-off valve on fuel tank to the closed (OFF) position **(Figure 14-16, Page 14-27)**.
   1.2. Loosen the intake air hose clamp (22) and disconnect the intake air hose (23) at the carburetor end only **(Figure 14-1, Page 14-3)**.
   1.3. Disconnect the governor cable (30) from the carburetor.
   1.4. Disconnect the carburetor vent line (14).
   1.5. Disconnect the fuel supply line (26) at the carburetor end only. Temporarily plug the end of the fuel line to prevent fuel leakage.
   1.6. Remove the carburetor retaining nuts (19), intake pipe (17), and carburetor (12). **See following NOTE.**

NOTE: *Note the orientation of the gasket (16), between the carburetor intake pipe (17) and the carburetor body (12) so that it can be replaced in the same orientation* ***(Figure 14-1, Page 14-3)****.*

When removing the carburetor body, the throttle return spring (11) must be disconnected. Note its proper orientation so that it can be replaced in the same orientation.

The carburetor must be kept upright during removal.

2. Position the carburetor with the drain screw (11) over a catch basin **(Figure 14-2, Page 14-4)**.
3. Turn the carburetor bowl drain screw counterclockwise two or three turns and drain all the fuel from the bowl into the catch basin **(Figure 14-2, Page 14-4)**. Tighten the drain screw to 10 in-lb (1.1 N·m). Return fuel to the fuel tank or dispose of properly.
4. Mark the body of the carburetor and the carburetor fuel bowl with an indelible ink marker so that, after removal, the bowl can be installed again in the same position **(Figure 14-2, Page 14-4)**.
5. Remove the carburetor fuel bowl retaining screw and washer (12), then remove the fuel bowl (10) and clean it with a nonflammable solvent **(Figure 14-2, Page 14-4)**. **See following NOTE.**

NOTE: *Make sure the fuel bowl gasket (9) remains properly seated in the carburetor body when the fuel bowl is removed* ***(Figure 14-2, Page 14-4)****.*

During normal operation, the fuel bowl retains the float pivot pin (6). Make sure that the float pivot pin does not fall out of the carburetor body after the fuel bowl is removed.

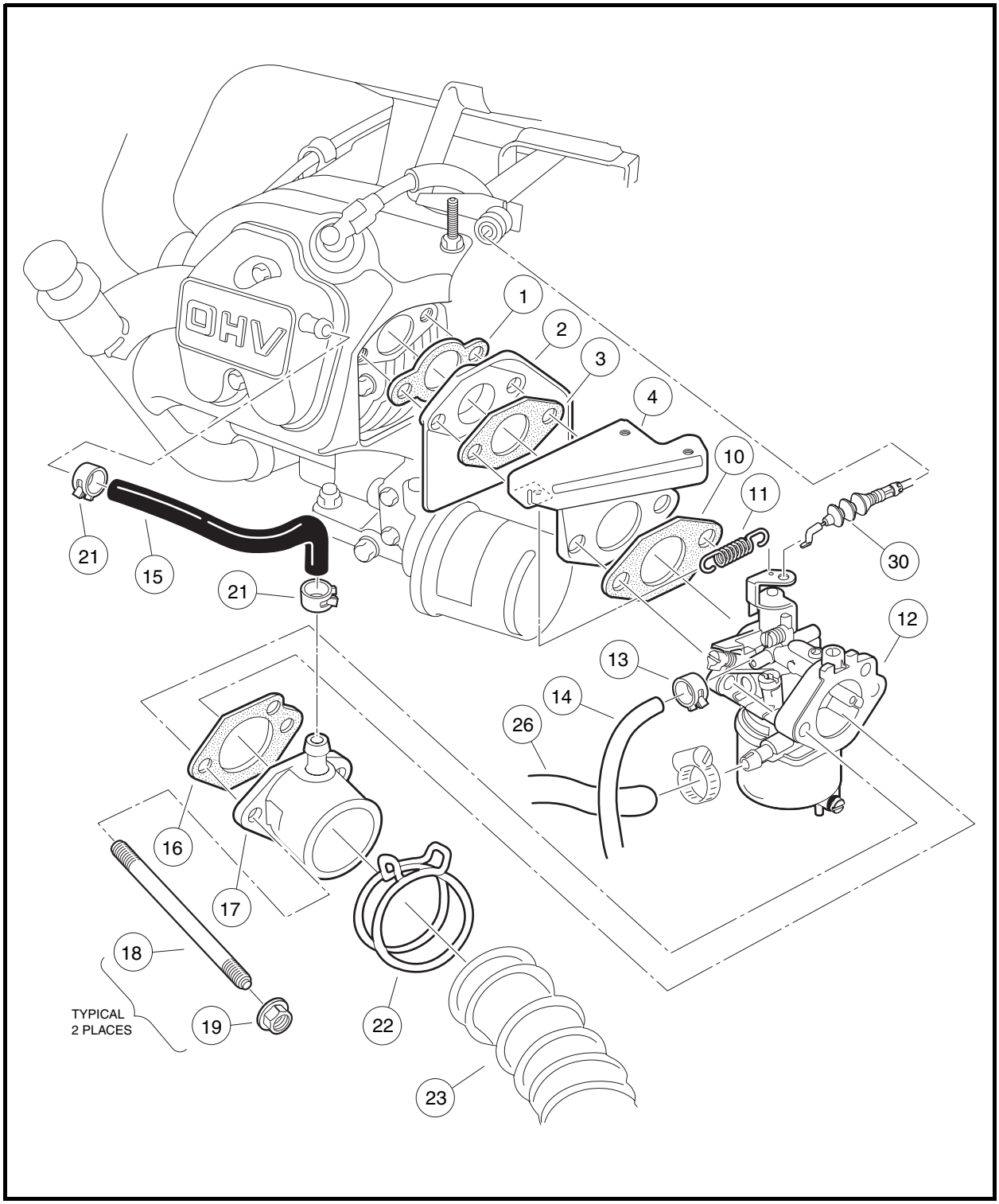

Figure 14-1 Carburetor Installation

Changing the Main Jet, Continued:

6. Remove the main jet (8) from the carburetor body and discard it **(Figure 14-2, Page 14-4)**.

NOTE: *Make sure the fuel nozzle (7) does not fall out of the carburetor body after removal of the main jet. This is best accomplished by positioning the carburetor upside down during main jet removal* ***(Figure 14-2, Page 14-4)****.*

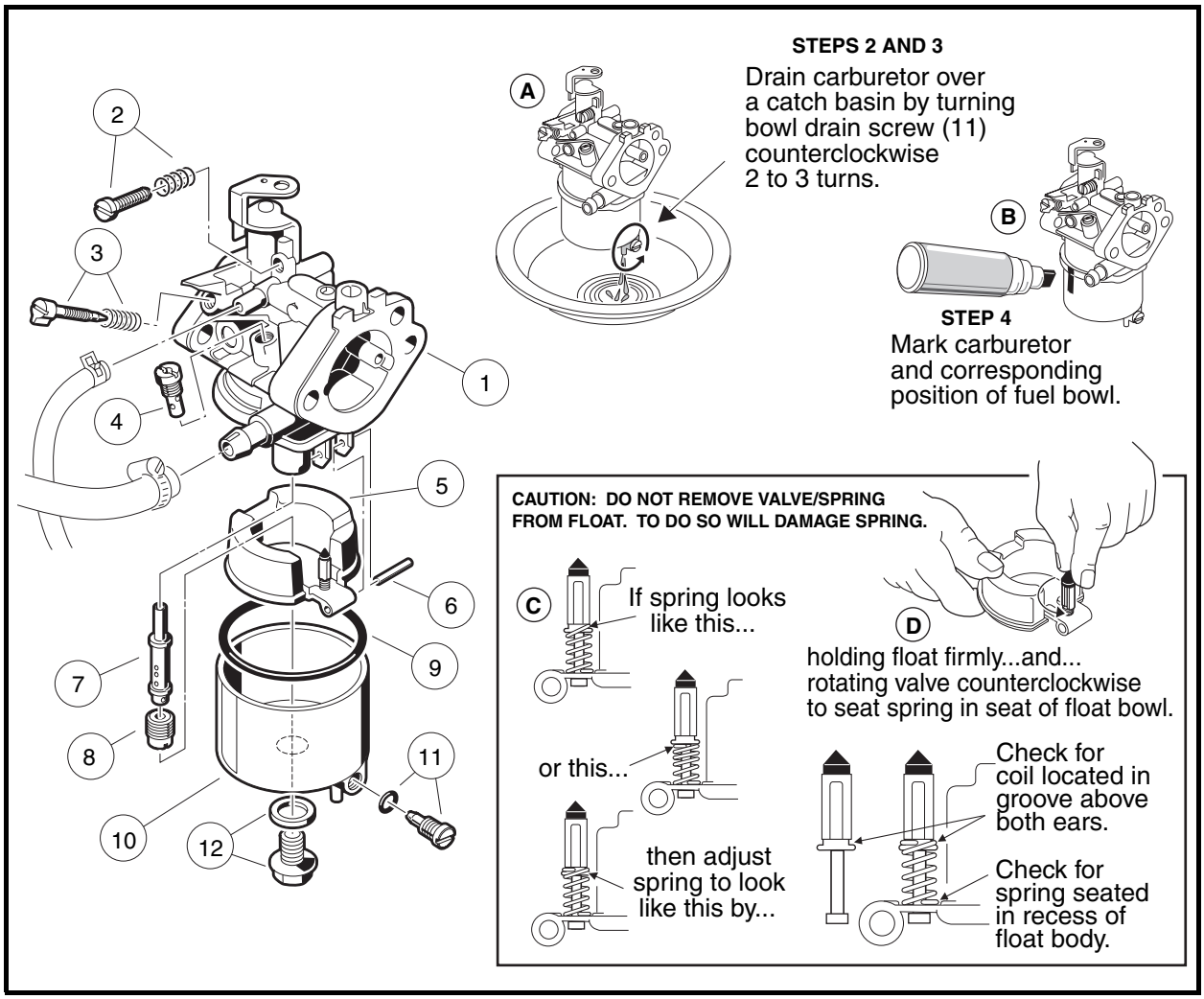

Figure 14-2 Changing the Main Jet

7. Select the proper size main jet. **See Main Jet Elevation/Size Chart on page 14-2.** Check the size designation on the jet to make sure it is the correct part.

8. Install the new main jet and tighten it to 12 in-lb (1.4 N·m). **See following CAUTION and NOTE.**

⚠ CAUTION

- **Do not remove the valve/spring assembly from the float assembly. Doing so will damage the spring.**

NOTE: *Inspect the main jet nozzle (7), and pilot jet (4) to ensure they are free from contamination. Replace any part that is clogged with contamination. Replace the float if it is damaged, or if the float valve is damaged or worn. Examine the float valve/spring assembly to make sure the spring is installed correctly* ***(Figure 14-2, Page 14-4)****.*

9. Install the fuel bowl. Make sure that it is positioned properly by aligning the marks applied in step 4. **See following CAUTION.**

⚠ CAUTION

- **Make sure the fuel bowl is properly seated against the carburetor fuel bowl gasket, and the gasket is not pinched.**

10. Install the fuel bowl retaining screw and tighten it to 61 in-lb (6.9 N·m).
11. Write the size of the main jet on the fuel bowl with an indelible ink marker. This should be written in a location that will be visible when the carburetor is installed on the engine.
12. Install the carburetor on the engine **(Figure 14-1, Page 14-3)**.
    12.1. Attach the throttle return spring (11) to the carburetor and then to the throttle bracket (4) just before positioning the carburetor and securing it to the engine **(Figure 14-1, Page 14-3)**.
    12.2. Install the intake pipe gasket (16) (check for proper orientation) and intake pipe (17).
    12.3. Install the carburetor retaining nuts (19) and tighten them to 50 in-lb (5.7 N·m).
13. Connect fuel supply line (26) and tighten screw clamp to 9 in-lb (1.0 N·m).
14. Install carburetor vent line (14) and clamp (13).
15. Install the governor cable (30).
16. Install the intake hose (23) and secure with hose clamp.

NOTE: *Make sure the intake hose is not twisted during installation.*

17. Turn fuel shut-off valve on top of fuel tank to the ON position **(Figure 14-17, Page 14-27 and Figure 14-18, Page 14-27)**.
18. Connect battery cables, positive (+) cable first, and tighten hardware to 12 ft-lb (16 N·m). **See Figure 10-1, Section 10, Page 10-3.** Coat terminals with Battery Terminal Protector Spray (CCI P/N 1014305) to minimize corrosion.
19. Test drive the vehicle.

ENGINE CONTROL LINKAGE

See General Warning, Section 10, Page 10-1.

GENERAL INFORMATION

For proper vehicle operation, it is important the accelerator pedal, governor linkage, and throttle adjustments are done correctly and in the proper sequence. **See following CAUTION.**

⚠ CAUTION

- **Improper adjustment can result in poor vehicle performance and/or damage to the engine components.**

ACCELERATOR ROD

⚠ DANGER

- **To ensure the vehicle does not run over you while you disconnect or adjust the accelerator push rod, do the following:**
- **Turn key switch OFF and remove key, place Forward/Reverse handle in the NEUTRAL position, and chock wheels prior to servicing the vehicle.**
  - **Disconnect battery cables, negative (–) cable first.**
  - **Disconnect the spark plug wire from the spark plug.**

Accelerator Rod Removal

1. Raise the front of the vehicle. Place chocks at the rear wheels and lift the front of the vehicle with a chain hoist or floor jack. Place jack stands under the round frame cross tube to support the vehicle. **See preceding DANGER. See also WARNING "Lift only one end of the vehicle..." in General Warning, Section 10, Page 10-2.**
2. Remove the accelerator rod by disconnecting the ball joint (1) from the ball stud (2) on the accelerator pedal **(Figure 14-3, Page 14-6)** and from the bell crank at the electrical box **(Figure 14-5, Page 14-7)**.

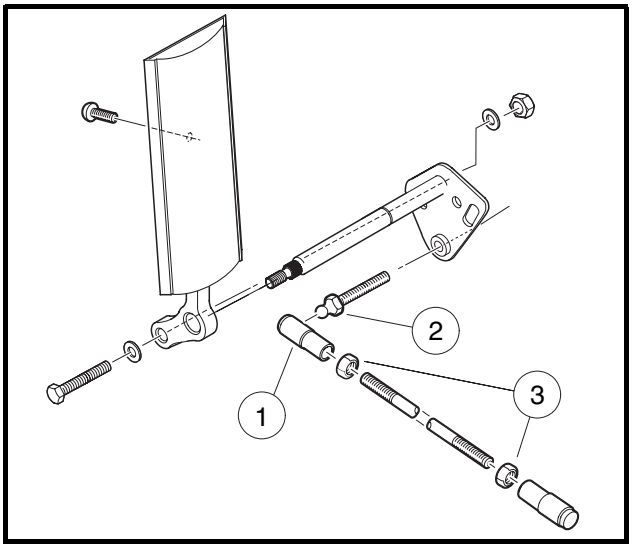

Figure 14-3 Accelerator Rod

Accelerator Rod Installation and Adjustment

1. Before installing the accelerator rod, adjust accelerator pedal position. **See Section 5 – Accelerator and Brake Pedal Group in the appropriate maintenance and service manual.**
2. Install the ball joint on the ball stud at the accelerator pedal **(Figure 14-3, Page 14-6)**.
3. Access the engine compartment.
4. Remove the electrical box screw and cover.
5. Adjust length of accelerator rod. With the ball joint jam nuts (3) loose **(Figure 14-3, Page 14-6)**, adjust the length of the accelerator rod so the indicated cam edge is parallel with the electrical component box as shown **(Figure 14-4, Page 14-7)**. **See following CAUTION.**

⚠ CAUTION

- **Be sure that approximately an equal number of threads are exposed at each end of the accelerator rod.**

6. Install the accelerator rod on the bell crank ball joint on the electrical component box **(Figure 14-5, Page 14-7)**. **See following CAUTION and NOTE.**

⚠ CAUTION

- **Inspect the limit switch inside the electrical box. If the limit switch lever is bent, replace the switch.**

NOTE: *Use the inside hole location, or hole closest to the bell crank shaft as shown* ***(Figure 14-5, Page 14-7)****.*

7. Before tightening the jam nuts, set the park brake to the first latch and pawl position and check for proper activation of switches.

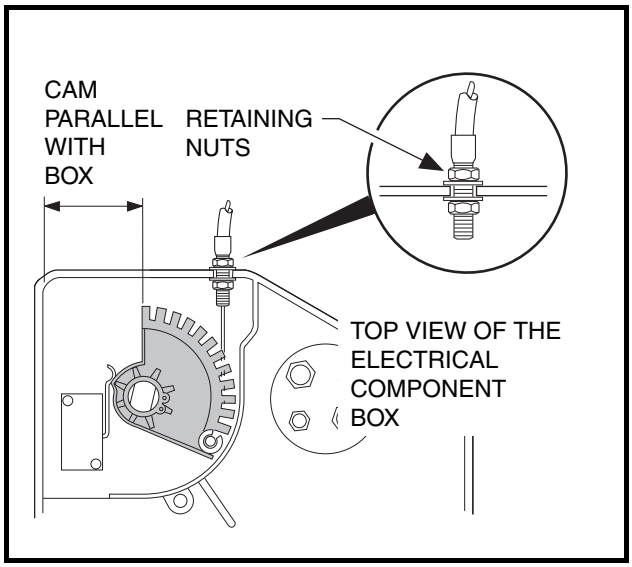

Figure 14-4 Cam Position

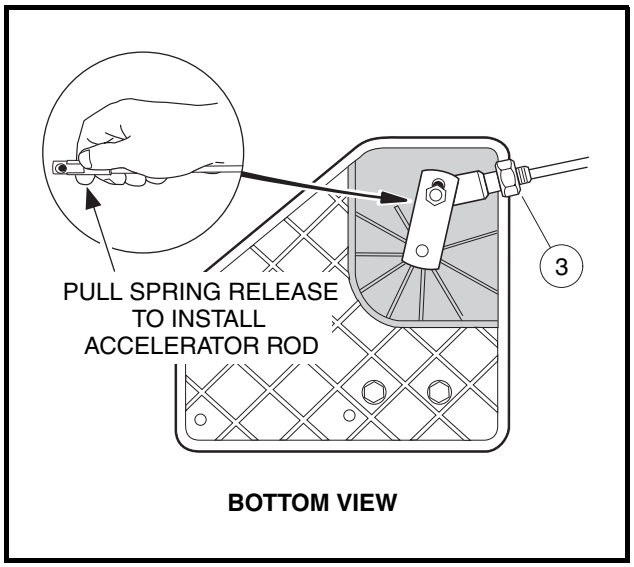

Figure 14-5 Accelerator Rod

8. While pressing the accelerator pedal, the following events should occur in *exactly the order shown*:

EVENT	APPROXIMATE PEDAL TRAVEL
Park brake release	0°-4°
Solenoid activation	4°-8°
Carburetor throttle actuation	8°-12°

9. While holding the accelerator ball joint with pliers, tighten the jam nuts against the ball joints, accelerator ball joint first, at each end of the accelerator rod.

Accelerator Rod Installation and Adjustment, Continued:

10. Check rod adjustment for proper switch activation.
11. After the pedal group and accelerator rod are properly adjusted, adjust the engine RPM setting. **See Engine RPM Adjustment on page 14-11.**
12. Install the electrical box cover and tighten retaining screw to 18 in-lb (2.0 N·m).
13. Connect battery cables, positive (+) cable first, and tighten hardware to 12 ft-lb (16 N·m). **See Figure 10-1, Section 10, Page 10-3.** Coat terminals with Battery Terminal Protector Spray (CCI P/N 1014305) to minimize corrosion.

GOVERNOR CABLE

Governor Cable Removal

1. Turn the key switch to the OFF position and remove the key, place the Forward/Reverse handle in the NEUTRAL position, and chock the wheels.
2. Access the engine compartment.
3. Disconnect the battery cables as instructed. **See WARNING "To avoid unintentionally starting..." in General Warning, Section 10, Page 10-1.**
4. Disconnect the governor cable (2) at the carburetor throttle **(Figure 14-1, Page 14-3)**.
5. Disconnect the governor cable (2) from the governor lever arm (15).
6. Remove the governor cable (2) from the governor cable engine bracket (11), and governor cable support bracket (10) **(Figure 14-1, Page 14-3)**. Remove the cable (2) from the vehicle.

Governor Cable Installation and Adjustment

1. Install the cable onto the governor cable support bracket (10) and the engine bracket (11) **(Figure 14-6, Page 14-9)**.
2. Push the cable dust shields onto the ends of the cable conduit.
3. Connect the governor cable to the carburetor throttle at the carburetor.
4. Connect the governor cable to the governor lever arm (15) **(Figure 14-6, Page 14-9)**.
5. With the governor lever arm loose on the governor shaft, use a 1/8-inch punch or scratch awl to turn the governor arm shaft counterclockwise until it stops. Then pull the governor lever arm rearward until the carburetor throttle is in the "wide open throttle" (WOT) position.
6. While holding the arm and shaft in the fully counterclockwise position, tighten the governor arm lever nut to 36 in-lb (4.0 N·m).
7. Check engine RPM adjustment. **See Engine RPM Adjustment on page 14-11.**

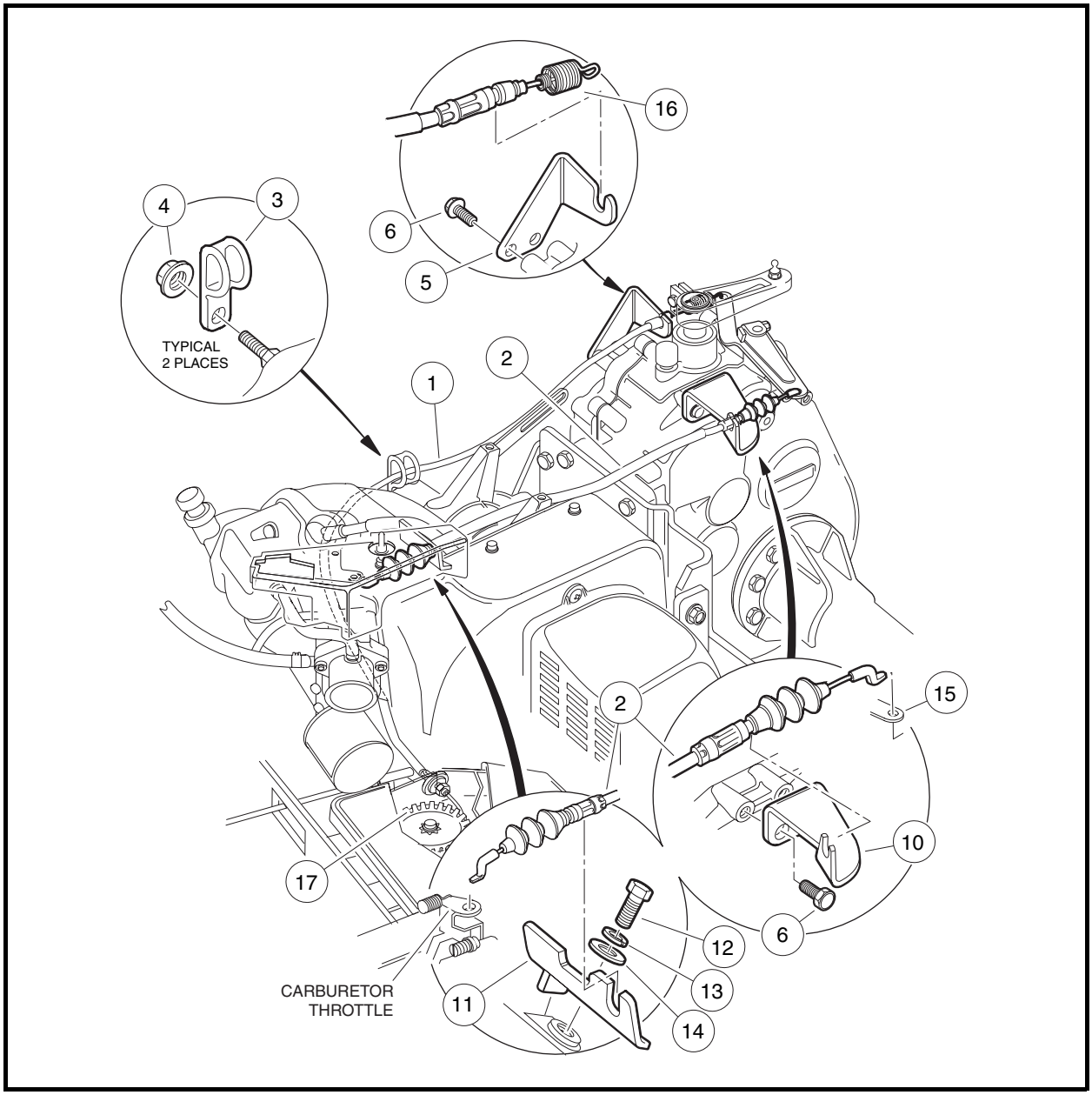

Figure 14-6 Governor and Accelerator Cables

ACCELERATOR CABLE

Accelerator Cable Removal

1. Access the engine compartment.
2. Remove the electrical box screw and cover and loosen the cable housing retaining nuts **(Figure 14-4, Page 14-7)**.
3. Disconnect cable (1) from cam (17) in the electrical box **(Figure 14-6, Page 14-9)**.
4. Disconnect the spring (16) from the engine governor arm.
5. Remove the accelerator cable from the accelerator cable bracket (5). Remove the cable assembly from the vehicle.

Accelerator Cable Installation

1. Connect the cable to the cam (17) in the electrical box **(Figure 14-6, Page 14-9)**.
2. Insert the cable housing into the mounting slot in the wall of the electrical box, with approximately the same number of threads visible between the jam nuts as are visible from the nut inside the box to the end of the cable housing **(Figure 14-4, Page 14-7)**. Tighten the nuts finger tight.
3. Connect the spring (16) to the engine governor arm **(Figure 14-6, Page 14-9)**.
4. Install cable in accelerator cable bracket (5).
5. Push the cable dust shield onto the spring end of the cable conduit.
6. Before tightening the cable housing retaining nuts, make sure the engine RPM adjustment is correct. **See Engine RPM Adjustment on page 14-11.**
7. Install the electrical box cover, and tighten the retaining screw to 18 in-lb (2.0 N·m).
8. Connect battery cables, positive (+) cable first, and tighten hardware to 12 ft-lb (16 N·m). **See Figure 10-1, Section 10, Page 10-3.** Coat terminals with Battery Terminal Protector Spray (CCI P/N 1014305) to minimize corrosion.

CLOSED THROTTLE OR IDLE ADJUSTMENT

Pedal-Start vehicles:

When the accelerator pedal is released, the engine will stop. Therefore, it is not possible to measure or set idling speed under normal vehicle operating conditions. Set throttle valve as follows:

1. Loosen the carburetor idle screw so that it is not touching the throttle lever **(Figure 14-7, Page 14-10)**.
2. Slowly tighten the idle screw until it lightly touches the throttle lever, then tighten it an additional 3/4 turn.

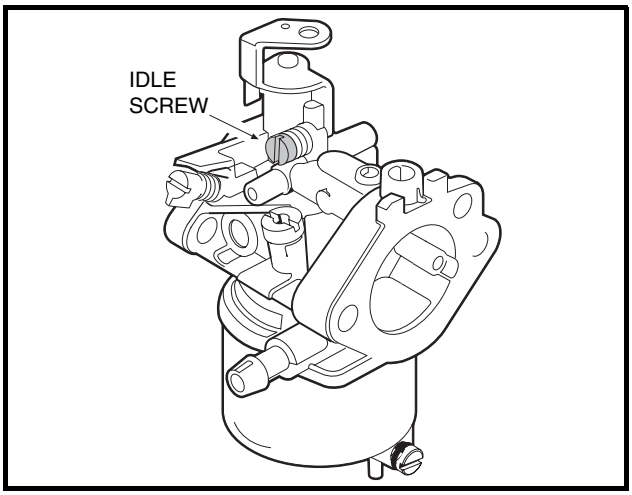

Figure 14-7 Idle Screw

Key-Start vehicles:

1. With the engine running and the Forward/Reverse handle in NEUTRAL, attach a tachometer (CCI P/N 1016112) to the spark plug wire and adjust the idle screw on the carburetor until the tachometer reads 1200 to 1250 RPM **(Figure 14-7, Page 14-10)**.

ENGINE RPM ADJUSTMENT

⚠ DANGER

- **Do not operate gasoline vehicle in an enclosed area without proper ventilation. The engine produces carbon monoxide, which is an odorless, deadly poison.**

1. If the governor is adjusted, proceed to step 2; otherwise, adjust the governor. **See Governor Cable Installation and Adjustment on page 14-8.**
2. Connect battery cables, positive (+) cable first, and tighten hardware to 12 ft-lb (16 N·m). **See Figure 10-1, Section 10, Page 10-3.** Coat terminals with Battery Terminal Protector Spray (CCI P/N 1014305) to minimize corrosion.
3. Place the Forward/Reverse handle in the NEUTRAL position, chock the wheels, and place the neutral lockout cam in the SERVICE (MAINTENANCE) position.
4. Connect a tachometer (CCI P/N 1016112) to the spark plug lead.
5. With the tachometer connected, and the engine at normal operating temperature, check high speed RPM. With the accelerator pedal pressed to the floor, the tachometer should read:

- Turf 2 (with two-wheel brakes): 3170 ±30 RPM
- Turf 2 (with four-wheel brakes): 3170 ±30 RPM
- Turf 2 (with four-wheel brakes and portable refreshment center): 3050 ±30 RPM
- Turf 6: 3050 ±30 RPM
- Carryall 2: 3170 ±30 RPM
- Carryall 2 Plus: 3650 ±30 RPM
- Carryall 2 Plus (with portable refreshment center): 3050 ±30 RPM
- Carryall 6: 3050 ±30 RPM
- Villager 6 and 8: 3050 ±30 RPM
- TransPorter vehicles: 3050 ±30 RPM

6. To **reduce** RPM, loosen the accelerator cable retaining nut on the outside of the electrical box wall and tighten the retaining nut on the inside of the wall until the specified RPM is reached **(Figure 14-4, Page 14-7)**. To **increase** RPM, loosen the cable retaining nut inside the electrical box and tighten the nut outside the box until the specified RPM is reached.
7. Be sure both retaining nuts are locked against the electrical box and then check the RPM again. If the RPM needs to be adjusted, repeat step 6.
8. If more adjustment is required than the cable housing will allow, make sure the spring on the other end of the accelerator cable is properly positioned. Excessive belt and torque converter wear can also prevent proper RPM adjustment. Check them for excessive wear. **See Section 17 – Torque Converter.**

CHOKE AND AIR INTAKE SYSTEM

See General Warning, Section 10, Page 10-1.

GENERAL INFORMATION

The choke system is a simple mechanism requiring very little or no maintenance. The system consists of a choke assembly that is attached to the driver side of the front body, an air filter housing with a hose that is attached to the carburetor, and an air duct that provides the engine with air from outside the engine compartment. Clean, cool air is drawn through the choke assembly and into the air cleaner intake. This feature increases engine horsepower and extends air filter life.

The choke system aids in starting the engine in cold weather. When starting a cold engine, the choke cable handle is pulled. This restricts the air flow, creating a “fuel rich” mixture in the carburetor. The choke cable handle is pulled until the engine starts, and then is released. The air flow to the engine is no longer restricted, and the engine operates normally.

The choke assembly is adjusted at the factory and does not require field adjustment; however, if the choke assembly is subjected to abuse or damaged, it may become necessary to replace the assembly.

CHOKE CABLE REMOVAL

1. Turn the key switch to the OFF position and remove the key, place the Forward/Reverse handle in the NEUTRAL position, and chock the wheels.
2. Disconnect the battery cables as instructed. **See WARNING “To avoid unintentionally starting...” in General Warning, Section 10, Page 10-1.**
3. Remove the screw (17) securing cable to air box and detach cable end from choke lever (6) **(Figure 14-8, Page 14-13 or Figure 14-9, Page 14-14)**.
4. Remove wire tie (28) from choke cable (if present) **(Figure 14-9, Page 14-14)**.
5. Remove three screws (19), nuts (21) and washers (20) from body and remove choke cable assembly from body **(Figure 14-8, Page 14-13 or Figure 14-9, Page 14-14)**.

CHOKE CABLE INSTALLATION

1. Insert choke cable through hole in body until choke lever assembly seats against body.
2. Install three screws (19), washers (20), and lock nuts (21) as shown and tighten to 18 in-lb (2.0 N·m) **(Figure 14-8, Page 14-13 or Figure 14-9, Page 14-14)**.
3. Check the hex nut on the cable at the back of the choke lever assembly. If it is loose, tighten it until the lock washer beside it collapses completely.
4. Attach choke cable to choke lever (6) on air box. Install screw (17) to secure cable to air box and tighten to 18 in-lb (2.0 N·m) **(Figure 14-8, Page 14-13 or Figure 14-9, Page 14-14)**.
5. Connect battery cables, positive (+) cable first, and tighten hardware to 12 ft-lb (16 N·m). **See Figure 10-1, Section 10, Page 10-3.** Coat terminals with Battery Terminal Protector Spray (CCI P/N 1014305) to minimize corrosion.

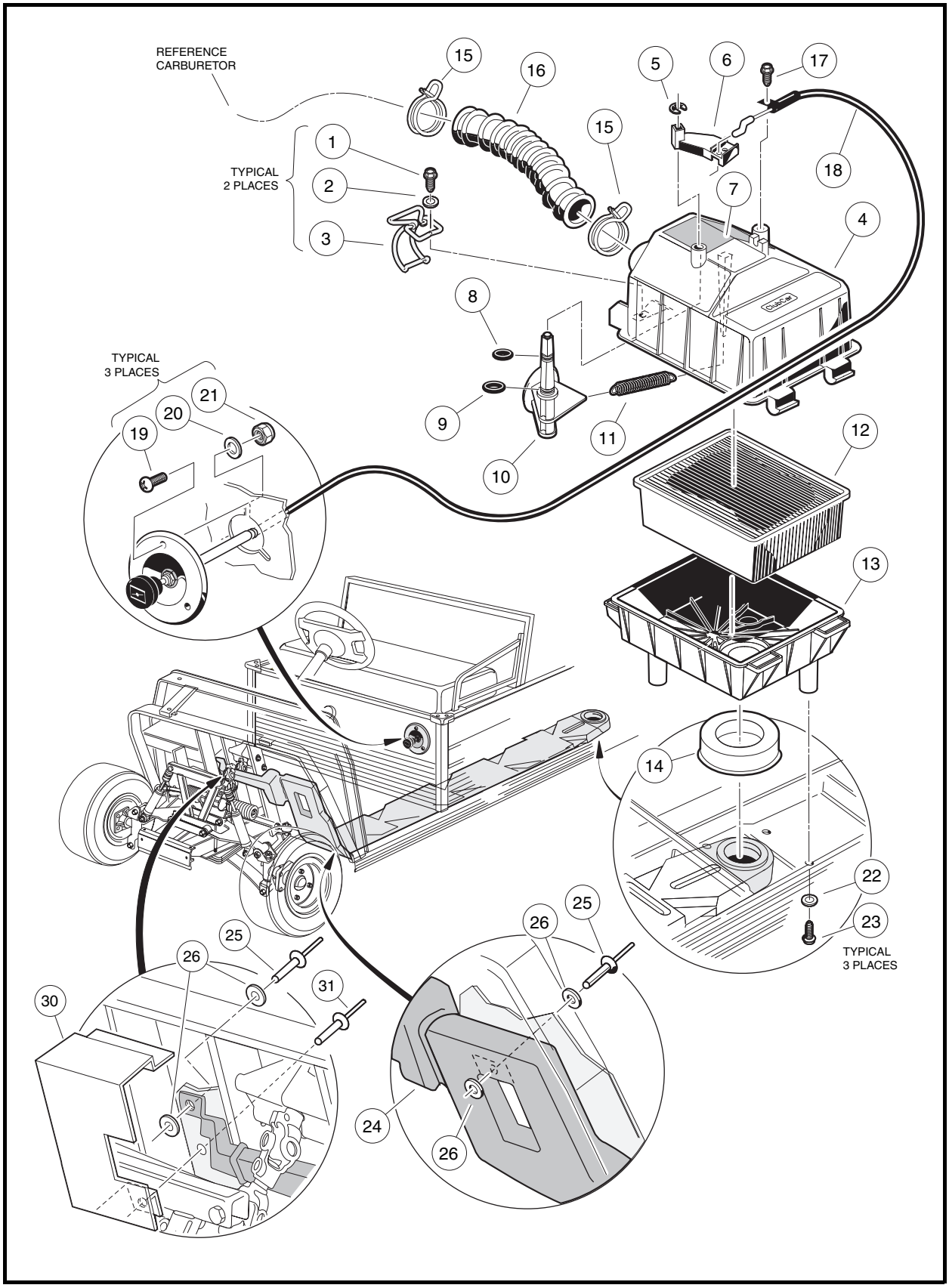

Figure 14-8 Turf 2, Carryall 2 and Carryall 2 Plus Air Intake and Choke Assemblies

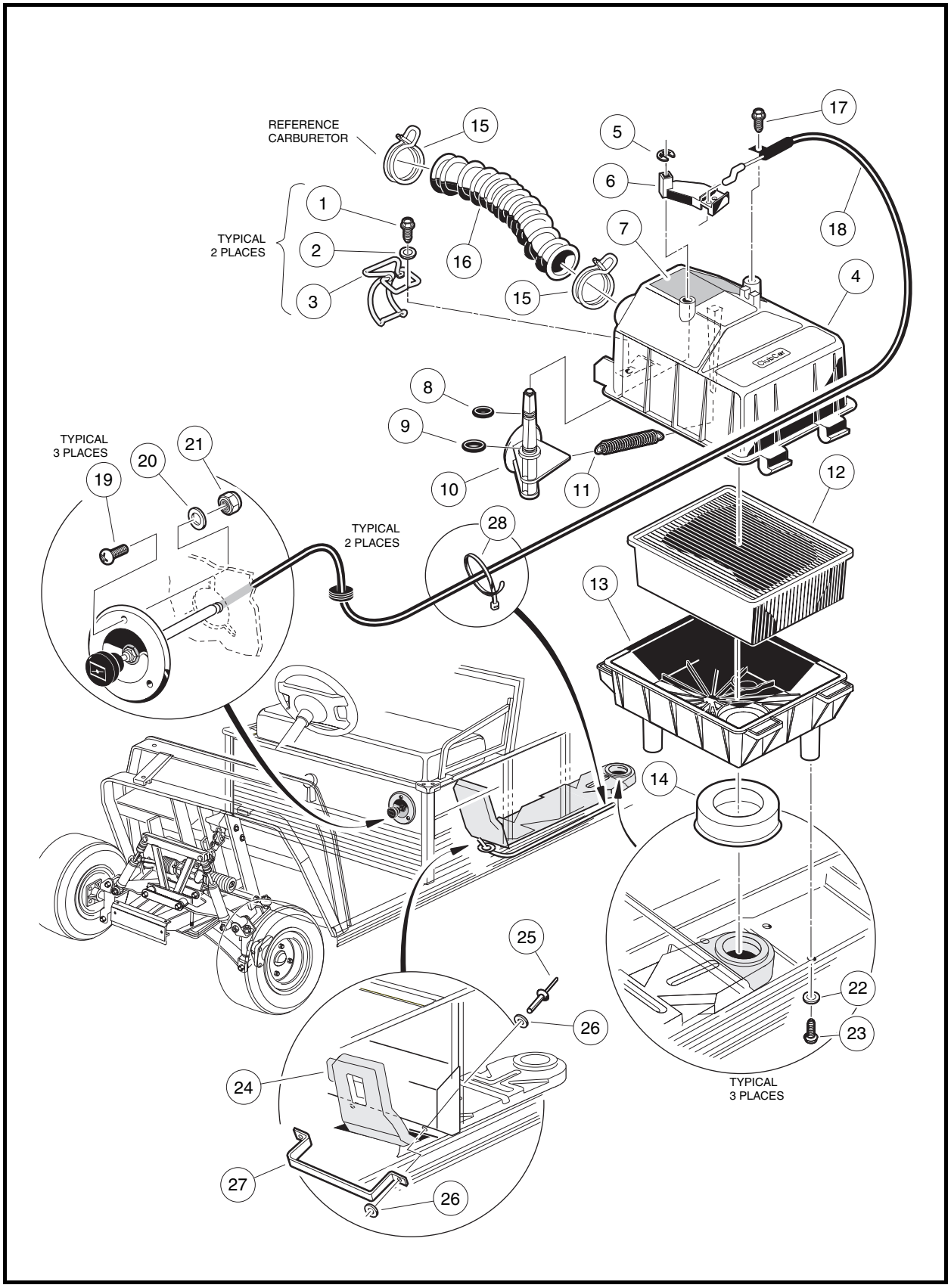

Figure 14-9 Turf 6, Carryall 6, TransPorter, and Villager Air Intake and Choke Assemblies

AIR BOX REMOVAL

1. Turn the key switch to the OFF position and remove the key, place the Forward/Reverse handle in the NEUTRAL position, and chock the wheels.
2. Disconnect the battery cables as instructed. **See WARNING "To avoid unintentionally starting..." in General Warning, Section 10, Page 10-1.**
3. Remove the air intake box from the vehicle by removing intake hose (16) and three screws (23) and washers (22) that mount the intake box to the vehicle **(Figure 14-8, Page 14-13 or Figure 14-9, Page 14-14)**.

AIR BOX INSTALLATION

NOTE: *The intake duct must be in place before the air box can be installed.*

1. Check to be sure the intake seal (14) is seated correctly **(Figure 14-8, Page 14-13 or Figure 14-9, Page 14-14)**. The seal fits tightly onto the bottom side of the air box. If seal is not in place, moisture will enter the air intake system.
2. Place the air box assembly into vehicle and install three flat washers (22) and screws (23) from underside of air box mounting plate into air box **(Figure 14-8, Page 14-13 or Figure 14-9, Page 14-14)**. Tighten to 33 in-lb (3.7 N·m).
3. Place hose onto air box and secure with wire clamp.
4. Attach the choke cable to the air box top. **See Choke Cable Installation on page 14-12.**
5. Connect battery cables, positive (+) cable first, and tighten hardware to 12 ft-lb (16 N·m). **See Figure 10-1, Section 10, Page 10-3.** Coat terminals with Battery Terminal Protector Spray (CCI P/N 1014305) to minimize corrosion.
6. Test choke for proper operation.

INTAKE DUCT REMOVAL

Turf 2, Carryall 2 and Carryall 2 Plus:

1. Remove the front body. **See Section 4 – Body and Trim in the appropriate maintenance and service manual**.
2. Remove the front left wheel. **See Section 8 – Wheels and Tires in the appropriate maintenance and service manual**.
3. Remove the steering joint assembly **(Figure 14-10, Page 14-16)**.
4. Drill out the pop rivet (31) securing the bottom of the air duct shield (30) to the floorboard **(Figure 14-8, Page 14-13).**
5. Separate the double-sided tape that secures the top of the air duct shield to the frame and remove air duct shield from vehicle.
6. Drill out the two pop rivets (25) securing the intake duct to the floorboard.
7. Remove three screws (23) and flat washers (22) from the bottom of the air box assembly.
8. Lift air box assembly off the intake duct. Be careful that the intake seal on the bottom of the air box assembly is not dislodged in the process.
9. Pull the intake duct forward and out of the vehicle.

Turf 6, Carryall 6, TransPorter and Villager:

1. Remove three screws (23) and flat washers (22) from the bottom of the air box assembly **(Figure 14-9, Page 14-14)**.
2. Lift air box assembly off the intake duct. Be careful that the intake seal on the bottom of the air box assembly is not dislodged in the process.
3. Drill out the two pop rivets (25) in the retaining bracket (27) **(Figure 14-9, Page 14-14)**.
4. Pull the air duct forward through the hole in the floorboard and up and out of the vehicle. (The Villager has no floorboard under the front seat.)

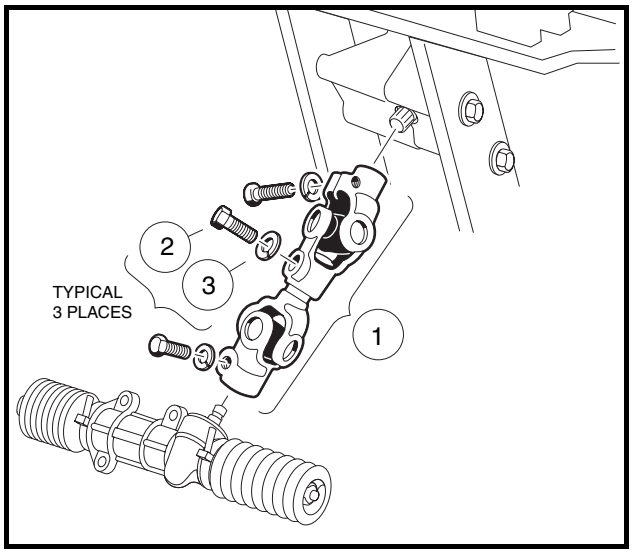

Figure 14-10 Compound Steering Joint

INTAKE DUCT INSTALLATION

Turf 2, Carryall 2 and Carryall 2 Plus:

The intake duct assembly is installed from the front of the vehicle.

1. Slide the intake duct between the round crossmember and the floorboard, moving it to the rear along the underside of the floorboard. Insert the end of the intake duct through the slot in the front of the air box mounting plate.
2. Secure the front of the duct to the underside of the floorboard with two pop rivets (25) and flat washers (26) **(Figure 14-8, Page 14-13)**.
3. Install the air duct shield (30).
   - 3.1. Remove any old double-sided tape that may still be adhered to the air duct shield or frame.
   - 3.2. Place a new strip of double-sided tape on the air duct shield. Do not remove backing from exposed side of tape.
   - 3.3. Secure the bottom of the air duct shield to the floorboard with a rivet (31).
   - 3.4. Remove the backing from the tape and secure top of air duct shield to frame.
4. Install air box. **See Air Box Installation on page 14-15.**
5. Install steering joint assembly. **See following NOTE.**

NOTE: *Make sure steering wheel and front wheels are properly aligned before installing steering joint.*

5.1. Position steering joint assembly (1) on vehicle as shown. Install three lock washers and three bolts and tighten to 15 ft-lb (20.3 N·m) **(Figure 14-10, Page 14-16)**.

5.2. Align the flat portion of the steering shaft spline with the bolt hole in the universal joint and then slide the shaft into the upper universal joint. Install the bolt and lock washer on the upper universal joint and tighten to 15 ft-lb (20 N·m).

6. Install front left wheel. Tighten the wheel rim mounting nuts to 55 ft-lb (75 N·m).
7. Install front body.
8. Check for proper operation.

Turf 6, Carryall 6, TransPorter and Villager:

1. Remove front seat and insert air duct through the hole in the floorboard under the seat.
2. Guide air duct into the hole at the front of the air box assembly mounting plate. Position air duct so the air box will fit correctly onto the air duct.
3. Install two pop rivets (25) and four flat washers (26) to secure air duct retaining bracket (27) around air duct as shown **(Figure 14-9, Page 14-14)**.
4. Install air box assembly. **See Air Box Installation on page 14-15.**

INTAKE DUCT REPAIR

If the air intake duct has a crack of 1/16 inch (1.5 mm) or less, and does not exceed 11 inches (27.5 cm) in length, or has a round shaped hole no greater than 1/2 inch (13 mm) in diameter, it may be repairable with an Air Duct Repair Kit (CCI P/N 101971001). This kit includes repair materials and procedures for small cracks and holes. If the intake duct is badly torn or has larger holes, it will need to be replaced.

AIR FILTER

General Information

The air filter should be checked every year or 100 hours. More frequent service may be required in extremely dirty operating environments. Need for immediate servicing will be indicated by a loss of power, sluggish acceleration, or an engine which runs roughly with excessive black exhaust smoke.

Air Filter Replacement

1. Lift two latches (3) on the side of the air box **(Figure 14-8, Page 14-13 or Figure 14-9, Page 14-14)**.
2. Remove the hose clamp (15) from the air hose and remove hose from the air box assembly.
3. Standing on driver side of vehicle, grasp air hose mounting inlet and open box fully. Remove filter element (12).
4. Using a clean cloth, wipe away any dust or dirt from inside the air box. Remove all dirt build-up around the inside lip of the box or the box will not seal properly.
5. Install new air filter by inserting back edge first, and pushing down using the palm of your hand to seat filter evenly onto inside lip of air box. Ensure filter fits correctly and that the wire latches are not caught between lid and air box. Close the lid.
6. Fasten wire latches (3). Make sure latches securely engage the bottom half of the box. **See following CAUTION.**

Air Filter Replacement, Continued:

⚠ CAUTION

- **Engine damage will occur if the air box cover is not properly secured.**
- **If air box is extremely dirty, remove air box from vehicle and clean thoroughly.**
- **Use only Club Car replacement air filters (CCI P/N 1015426). The use of other air filters could result in engine damage. If the air filter is too thin, the cover will seat before the filter can seal, leaving space for dirt to pass into the engine on all sides of the element. This will damage the engine and void the warranty.**

7. Install hose (16) and hose clamp (15) **(Figure 14-8, Page 14-13 or Figure 14-9, Page 14-14)**. Make sure clamp ends are located in the 12:00 o'clock position.

FUEL FILTERS

See General Warning, Section 10, Page 10-1.

GENERAL INFORMATION

Fuel is supplied to the fuel pump and carburetor through flexible lines. Two in-line filters are installed between the fuel tank and the carburetor **(Figure 14-11, Page 14-19)**. Fuel filters, fuel lines, and the fuel tank vent should be inspected periodically for leaks.

The fuel filters should be replaced when necessary, but under no circumstance should the period of time between filter changes exceed two years or 200 hours.

FUEL FILTER REMOVAL

1. Turn the key switch to the OFF position and remove the key, place the Forward/Reverse handle in the NEUTRAL position, and chock the wheels.
2. Disconnect the battery cables as instructed. **See WARNING "To avoid unintentionally starting..." in General Warning, Section 10, Page 10-1.**
3. To prevent fuel drainage, turn the fuel shut-off valve (15) **(Figure 14-11, Page 14-19)** on the fuel tank to the closed (OFF) position **(Figure 14-16, Page 14-27)**.
4. Remove the primary fuel filter (17) **(Figure 14-11, Page 14-19)**.
   4.1. Remove the clamps (16) and fuel lines (1 and 2) from the filter and plug the fuel lines.
5. Remove the secondary filter (22).
   5.1. Remove the clamps (16 and 20) and fuel lines (3 and 4) from the filter and plug the fuel lines (3 and 4).

FUEL FILTER INSTALLATION

⚠ CAUTION

- **Fuel filters are marked with flow direction arrows. Make sure that filters are installed with arrows pointing in the direction of fuel flow from tank to carburetor.**

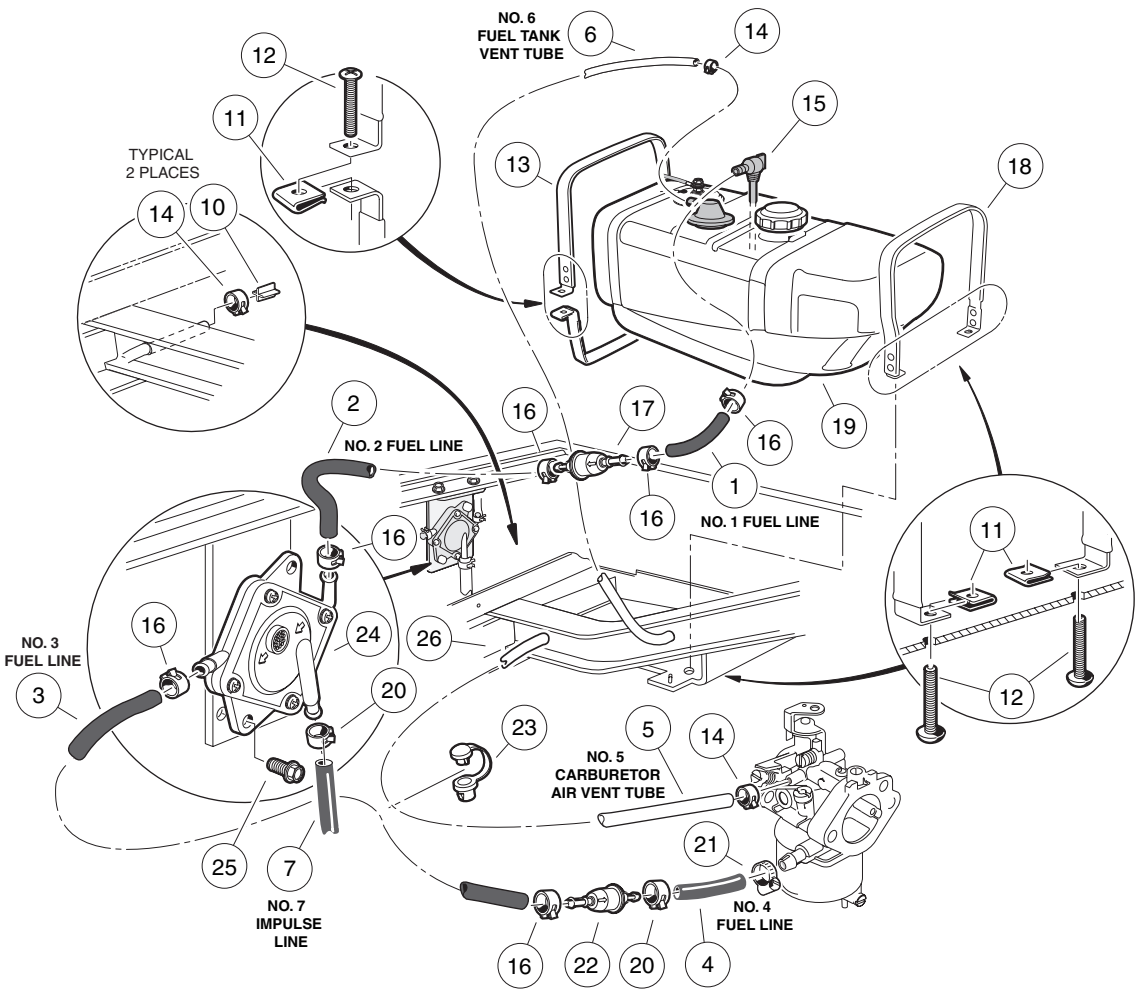

FUEL LINE No.	ROUTING	LENGTH (Turf 2,CA 2, CA 2 Plus) Solid Color	LENGTH (Turf 2,CA 2, CA 2 Plus) Clear	LENGTH (Turf 6, CA 6, TransPorter, and Villager vehicles) Solid Color	LENGTH (Turf 6, CA 6, TransPorter, and Villager vehicles) Clear
1	Fuel tank to primary fuel filter	14.0 in. (35.6 cm)		6.0 in. (15.2 cm)	
2	Primary fuel filter to fuel pump	6.0 in. (15.2 cm)		6.0 in. (15.2 cm)	
3	Fuel pump to secondary fuel filter	11.5 in. (29.2 cm)		11.5 in. (29.2 cm)	
4	Secondary fuel filter to carburetor	2.5 in. (6.4 cm)		2.5 in. (6.4 cm)	
5	Vent tube (Carburetor)		22.0 in. (55.9 cm)		22.0 in. (55.9 cm)
6	Vent tube (Fuel Tank)		17.0 in. (43.2 cm)		17.0 in. (43.2 cm)
7	Impulse line	14.0 in. (35.6 cm)		17.0 in. (43.2 cm)	
	Total	48.0 in. (121.9 cm)	39.0 in. (99.1 cm)	43.0 in. (109.2 cm)	39.0 in. (99.1 cm)

Figure 14-11 Fuel and Vent Lines

1. Install the primary fuel filter (17) in the fuel line. Use new clamps (16) **(Figure 14-11, Page 14-19)**.
2. Install the secondary fuel filter (22) in the fuel line. Use new clamps (16 and 20).
3. Turn the fuel shut-off valve to the ON position **(Figure 14-17, Page 14-27)**.
4. Connect the spark plug wire to the spark plug.

Fuel Filter Installation, Continued:

5. Connect battery cables, positive (+) cable first, and tighten hardware to 12 ft-lb (16 N·m). **See Figure 10-1, Section 10, Page 10-3.** Coat terminals with Battery Terminal Protector Spray (CCI P/N 1014305) to minimize corrosion.
6. Place the Forward/Reverse handle in the NEUTRAL position, chock the wheels, and place the neutral lockout cam in the SERVICE (MAINTENANCE) position. Start the engine and check for fuel leaks. **See following DANGER.**

⚠ DANGER

- **Repair all fuel leaks before operating the vehicle.**

7. Place the neutral lockout cam in the OPERATE position.

FUEL PUMP

See General Warning, Section 10, Page 10-1.

GENERAL INFORMATION

The gasoline vehicle is equipped with an impulse fuel pump. If the fuel pump is not operating properly, perform the following tests:

- Make sure all hose clamps are tight.
- Inspect the impulse line and fuel lines for damage or clogging.
- Make sure the air vent on the fuel pump is not clogged with dirt.
- Make sure the fuel filters are not clogged.

To clean the air vent, the fuel pump must be disassembled.

FUEL PUMP REMOVAL

1. Turn the key switch to the OFF position and remove the key, place the Forward/Reverse handle in the NEUTRAL position, and chock the wheels.
2. Disconnect the battery cables as instructed. **See WARNING "To avoid unintentionally starting..." in General Warning, Section 10, Page 10-1.**
3. Turn fuel shut-off valve on top of the fuel tank to the closed (OFF) position **(Figure 14-16, Page 14-27)**.
4. Remove hardware attaching the fuel pump (24) and lift the fuel pump out of the engine compartment **(Figure 14-11, Page 14-19)**.
5. Remove the clamp (20) and impulse line (7) from fuel pump.
6. Disconnect the fuel lines (2 and 3) from the pump and plug them to prevent fuel leakage. **See following WARNING.**

⚠ WARNING

- **Carefully drain any fuel remaining in the pump into an approved container. Add drained fuel back into fuel tank or dispose of properly.**

FUEL PUMP DISASSEMBLY

⚠ CAUTION

- **Fuel pump gaskets and diaphragms must be installed in exactly the same positions and orientations they were in before disassembly, or the pump could leak. If leaking occurs, all new gaskets and diaphragms must be installed.**

NOTE: *A fuel pump rebuild kit is available from Club Car (CCI P/N 1014524). This kit includes all gaskets, diaphragms, and valves.*

1. Before disassembling the fuel pump, match mark the pump and cover.
2. Remove four screws (24) and lock washers (25) from front of the fuel pump **(Figure 14-12, Page 14-21)**.
3. Remove the front cover of the fuel pump while holding the rest of the pump intact.
4. Note the orientations of the impulse gasket (27), the diaphragm (28), and the gasket (29), then remove them from the pump.
5. If the impulse gasket (27) and the diaphragm (28) come off with the front cover, note their orientations and remove them **(Figure 14-12, Page 14-21)**.
6. Remove the pumping chamber (30).
7. Remove the back cover (36), the fuel diaphragm (34) and gasket (35).

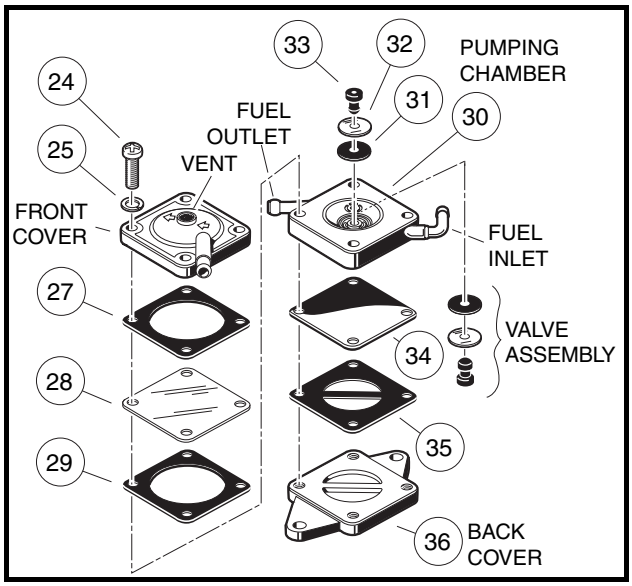

Figure 14-12 Fuel Pump

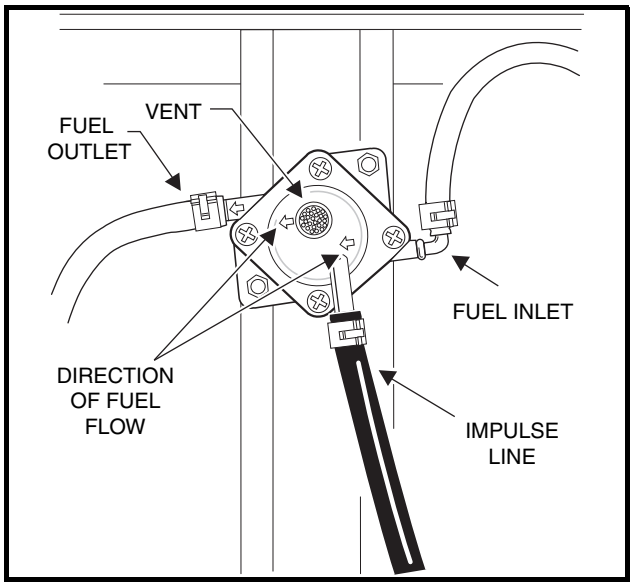

Figure 14-13 Fuel Pump Orientation

FUEL PUMP CLEANING AND INSPECTION

1. Using a nonflammable solvent, clean the front cover, pumping chamber, and back cover. Be sure the vent on the front cover is clean both inside and out.
2. Inspect the valve assemblies (31, 32, and 33) and all gaskets and diaphragms for damage **(Figure 14-12, Page 14-21)**.
3. If a valve assembly is damaged, the rubber retaining plug (33) and valve assembly must be replaced.

FUEL PUMP ASSEMBLY

1. Install the fuel gasket (35) and diaphragm (34) on the back cover (36) **(Figure 14-12, Page 14-21)**.
2. Install the valve assembly in the pumping chamber (30). **See following CAUTION.**

⚠ CAUTION

- **If the valve assembly is not installed exactly as shown (Figure 14-12, Page 14-21), the impulse fuel pump will not operate properly.**

3. Install the pumping chamber (30) on top of the fuel diaphragm (34). Be sure the fuel inlet and the fuel outlet align with the arrows on the front of the front cover **(Figure 14-12, Page 14-21)**.
4. Install the gasket (29), clear impulse diaphragm (28), and the paper impulse gasket (27) to the pumping chamber (30).
5. Install the front cover and then the lock washers (25) and four screws (24) on the assembly **(Figure 14-12, Page 14-21)**. Be sure the arrows on the front cover point from the fuel inlet to the fuel outlet **(Figure 14-13, Page 14-21)**. Tighten the screws to 26 in-lb (3.0 N·m).

FUEL PUMP INSTALLATION

1. Connect to the fuel pump the fuel line (2) that comes from the primary fuel filter (17). Install a new clamp (16). Route the fuel lines as shown **(Figure 14-11, Page 14-19)**.

NOTE: *Be sure to connect the fuel line (2), that comes from the primary fuel filter (17), to the inlet nipple on the pump. Direction of fuel flow is indicated by the arrows on the fuel pump* ***(Figure 14-11, Page 14-19)****.* ***See also Figure 14-13, Page 14-21.***

2. Connect to the output side of the fuel pump, the fuel line (3) that goes to the secondary fuel filter (22) **(Figure 14-11, Page 14-19)**.
3. Connect the impulse line (7) to the bottom nipple on the fuel pump. Use a new clamp (20).
4. Install the fuel pump:

- For Villager 6 and 8 vehicles, install the fuel pump on the frame and tighten the mounting bolts and lock nuts to 60 in-lb (6.8 N·m).
- For all other vehicles, install the fuel pump onto the mounting bracket with two thread-rolling screws (25) and tighten to 40 in-lb (4.5 N·m) **(Figure 14-11, Page 14-19)**.

5. Connect battery cables, positive (+) cable first, and tighten hardware to 12 ft-lb (16 N·m). **See Figure 10-1, Section 10, Page 10-3.** Coat terminals with Battery Terminal Protector Spray (CCI P/N 1014305) to minimize corrosion.
6. Turn the fuel shut-off valve on top of the fuel tank to the open position **(Figure 14-17, Page 14-27 and Figure 14-18, Page 14-27)**.
7. Place the Forward/Reverse handle in the NEUTRAL position, chock the wheels, and place the neutral lockout cam in the SERVICE (MAINTENANCE) position. Start the engine and check for fuel leaks. If the fuel pump leaks, a rebuild kit must be installed to replace all gaskets and diaphragms. **See following DANGER**.

⚠ DANGER

- **Repair all fuel leaks before operating the vehicle.**

8. Place the neutral lockout cam in the OPERATE position.

FUEL TANK

See General Warning, Section 10, Page 10-1.

GENERAL INFORMATION

The vehicle is equipped with a high impact plastic, seven gallon (26.5 liter) fuel tank.

⚠ WARNING

- **If the fuel tank is damaged, replace it. Do not attempt to repair it. See the following tank removal and disposal procedure.**

⚠ CAUTION

- **Add only unleaded fuel to the tank. Do not put oil in the fuel tank.**

FUEL TANK REMOVAL

1. Remove the rear body (Villager vehicles) or the seat back support (Turf 2, Carryall 2, Carryall 2 Plus, and TransPorter). **See Section 4 – Body and Trim in the appropriate maintenance and service manual**.
2. Place the Forward/Reverse handle in the NEUTRAL position and the neutral lockout cam in the SERVICE (MAINTENANCE) position.
3. Turn fuel shut-off valve to the closed (OFF) position and run the engine until fuel remaining in the carburetor, fuel pump, and fuel lines is used up and the engine stalls **(Figure 14-16, Page 14-27)**.
4. Turn the key switch to the OFF position and remove the key, place the Forward/Reverse handle in the NEUTRAL position, and chock the wheels.
5. Disconnect the battery cables as instructed. **See WARNING "To avoid unintentionally starting..." in General Warning, Section 10, Page 10-1.**
6. Return the neutral lockout cam to the OPERATE position.
7. Loosen, but do not remove, the carburetor drain screw (11) and drain fuel remaining in the carburetor bowl into an approved container **(Figure 14-2, Page 14-4)**. Retighten carburetor drain screw.
8. Using a siphon with a suction device, siphon all fuel out of the tank and into an approved container. **See following DANGER and WARNING.**

⚠ DANGER

- **Gasoline – Flammable! Explosive! Do not smoke. Keep sparks and flames away from the vehicle and service area. Service only in a well-ventilated area.**

⚠ WARNING

- **Do not attempt to siphon fuel using a hose that does not have a built-in suction device.**
- **Do not attempt to siphon fuel using your mouth.**

9. If vehicle is equipped with a fuel gauge, disconnect the black wire and orange wire from the fuel level sending unit on the tank **(Figure 14-14, Page 14-24)**. Do not remove the lower nut on the center stud of the sending unit. **See following WARNING.**

Fuel Tank Removal, Continued:

⚠ WARNING

- **Make sure the key switch is OFF before disconnecting wiring.**

10. Remove the vent tube (6) and fuel line (1) from the fuel tank **(Figure 14-11, Page 14-19)**.
11. Loosen the straps (13 and 18) by removing the screws (12) from the speed nuts (11).
12. Lift the fuel tank out of the vehicle.

FUEL TANK DISPOSAL

1. Remove the cap from the tank and thoroughly rinse it with water. The cap may be discarded or kept as a spare.
2. In a well-ventilated area, flush the fuel tank with water to remove any remaining fuel.
3. In a well-ventilated area, set the tank upside down so that the water can drain out of it. To make sure that the tank dries completely, allow the tank to sit for 24 hours. **See following CAUTION.**

⚠ CAUTION

- **Dispose of wastewater and fuel tank in accordance with local, state, and federal laws and ordinances.**

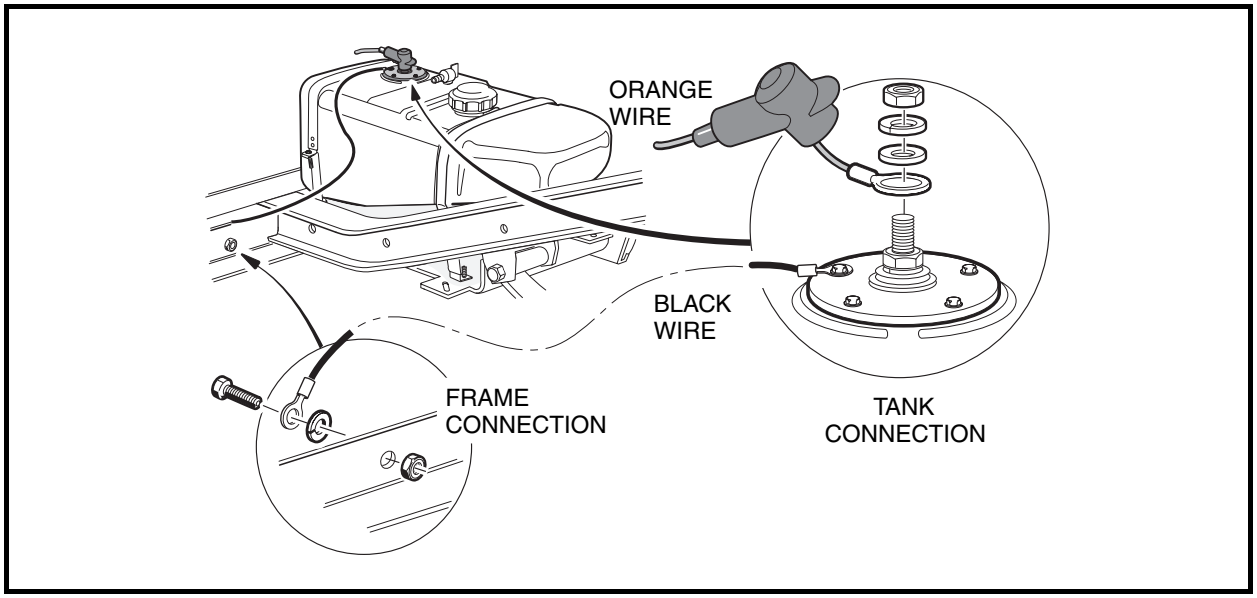

Figure 14-14 Fuel Level Sending Unit

FUEL TANK STORAGE

1. Remove the cap from the tank and thoroughly rinse it with water.
2. In a well-ventilated area, flush the fuel tank with water to remove any remaining fuel.
3. In a well-ventilated area, set the tank upside down so that the water can drain out of it. To make sure that the tank dries completely, allow the tank to sit for 24 hours.

4. Store the tank upside down, with the cap installed, in a well-ventilated area.

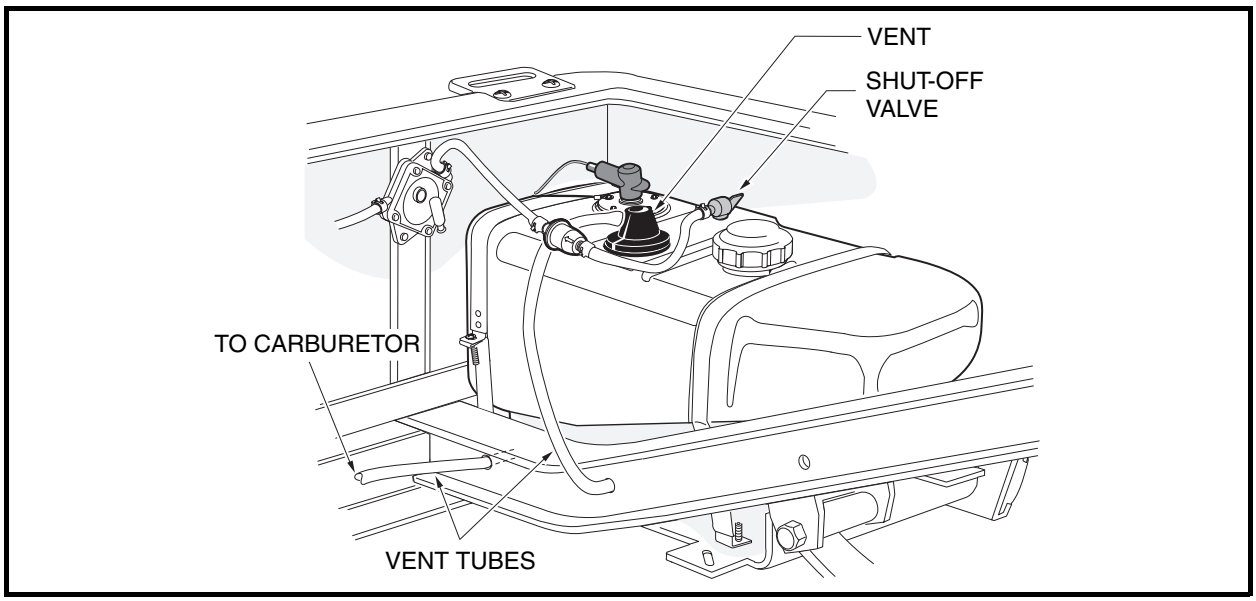

Figure 14-15 Fuel Tank

FUEL TANK INSTALLATION

1. With the retaining straps correctly positioned, install the fuel tank in the vehicle.
2. Secure the tank with the retaining straps (13 and 18) **(Figure 14-11, Page 14-19)**.
   2.1. Position the straps in the indentions on the tank.
   2.2. Install the screws (12) into the speed nuts (11). Tighten screws and nuts to 25 in-lb (2.8 N·m) **(Figure 14-11, Page 14-19)**.
3. Install the rear body or bed on the vehicle if removed. Install seat back support if removed. **See Section 4 – Body and Trim in the appropriate maintenance and service manual.**
4. Connect the vent tube (6) to the fuel tank vent **(Figure 14-11, Page 14-19)**.
5. Connect the fuel line (1) to the fuel tank shut-off valve (15). Use a new clamp (16) **(Figure 14-11, Page 14-19)**.
6. Connect the black wire to one of the fuel level sending unit screws. Connect the orange wire to the center stud and install the flat washer, lock washer, and nut. Tighten to 18 in-lb (2.0 N·m).
7. Slide the rubber boot over the stud **(Figure 14-14, Page 14-24)**.
8. Add fuel to the tank.
9. Connect battery cables, positive (+) cable first, and tighten hardware to 12 ft-lb (16 N·m). **See Figure 10-1, Section 10, Page 10-3.** Coat terminals with Battery Terminal Protector Spray (CCI P/N 1014305) to minimize corrosion.
10. Ensure that the wheels are chocked, the Forward/Reverse handle is in the NEUTRAL position, and that the neutral lockout cam is in the SERVICE (MAINTENANCE) position.

Fuel Tank Installation, Continued:

11. Check to be sure the fuel shut-off valve on top of the fuel tank is in the open (ON) position **(Figure 14-17, Page 14-27 and Figure 14-18, Page 14-27)**.
12. Turn the key switch to the ON position and press the accelerator pedal to start the engine. **See following DANGER.**

⚠ DANGER

- **Do not operate gasoline vehicle in an enclosed area without proper ventilation. The engine produces carbon monoxide, which is an odorless, deadly poison.**
- **After installing the fuel tank and adding fuel, carefully check all fuel lines and connections for leaks. Repair any fuel leaks before operating the vehicle.**

13. Allow the engine to run for a few minutes to ensure that the fuel lines are full of fuel.
14. Inspect each fuel line for leaks.
    14.1. Check all of the fuel line clamps at the carburetor, fuel filters, fuel pump, and fuel tank for leaks.
    14.2. Inspect each fuel line to ensure that the lines are not cracked, cut, or worn.

FUEL LINES

See General Warning, Section 10, Page 10-1.

The fuel lines must be properly routed, and all hose clamps must be tight. The fuel lines should be kept clean. **See following WARNING**.

⚠ WARNING

- **Make sure fuel lines are the right length and are properly routed. Failure to heed this warning could result in damage to fuel lines and fire.**

Fuel line no. 1 runs directly from the fuel tank to the primary fuel filter (17). The primary fuel filter has an arrow indicating fuel flow direction **(Figure 14-11, Page 14-19)**.

Fuel line no. 2 runs directly from the primary fuel filter to the fuel inlet of the fuel pump.

Fuel line no. 3 runs directly from the fuel outlet of the fuel pump to the secondary fuel filter **(Figure 14-11, Page 14-19)**. The secondary fuel filter has an arrow indicating fuel flow direction and is identical to the primary fuel filter.

Fuel line no. 4 runs from the outlet of the secondary fuel filter to the carburetor **(Figure 14-11, Page 14-19)**.

Small spring steel band clamps are used on all hose connections except at the carburetor. A screw band clamp (21) should be used at the carburetor **(Figure 14-11, Page 14-19)**.

FUEL SHUT-OFF VALVE

See General Warning, Section 10, Page 10-1.

The fuel shut-off valve is located on top of the fuel tank **(Figure 14-15, Page 14-25)**. The fuel shut-off valve should always be turned to the closed (OFF) position during vehicle storage, towing or trailering **(Figure 14-16, Page 14-27)**. Unless the engine will be run as part of a procedure, the fuel shut-off valve should also be closed (OFF) before performing maintenance or service procedures.

Fully Open Position

The valve's open position differs from standard valve configurations. For the valve to be fully open, it must be turned approximately 120° from the closed (OFF) position (until it cannot be turned any further) **(Figure 14-17, Page 14-27).** If the valve becomes partially closed **(Figure 14-18, Page 14-27)**, the engine will not run properly due to fuel starvation.

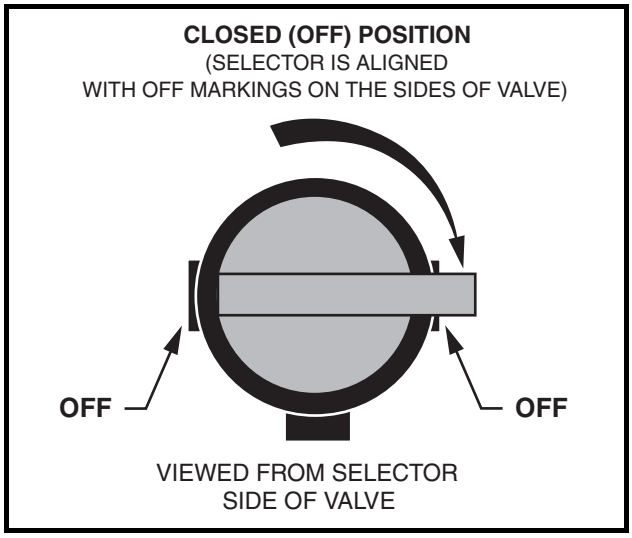

Figure 14-16 Closed Fuel Shut-off Valve

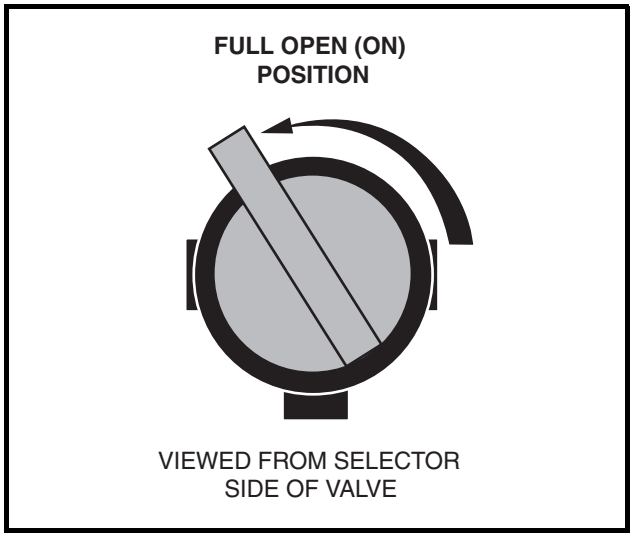

Figure 14-17 Open Fuel Shut-off Valve

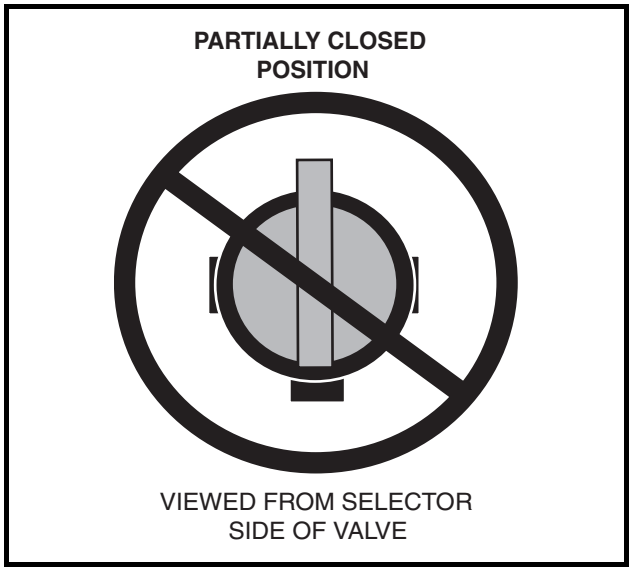

Figure 14-18 Incorrect Fuel Shut-off Valve

SECTION 15 – EXHAUST SYSTEM

⚠ DANGER

- **See General Warning, Section 10, Page 10-1.**

⚠ WARNING

- **See General Warning, Section 10, Page 10-1.**

MUFFLER

MUFFLER REMOVAL

1. Disconnect the battery cables as instructed. **See WARNING "To avoid unintentionally starting..." in General Warning, Section 10, Page 10-1.**
2. Disconnect the spark plug wire from the spark plug. **See WARNING "To avoid unintentionally starting..." in General Warning, Section 10, Page 10-1.**
3. Remove the hex nuts (10) and lock washers (11) **(Figure 15-1, Page 15-2)**.
4. Remove the hex-head cap screw (7), lock washer (8), and flat washer (9) from mounting bracket. Retain the governor cable bracket (13).
5. Remove the muffler clamp (6) from the muffler bracket (2).
6. Remove the muffler (1) from the vehicle.

MUFFLER INSTALLATION

NOTE: *Any time the muffler is removed from the vehicle, install a new muffler clamp (6) (CCI P/N 1017689) and muffler gasket (12)* ***(Figure 15-1, Page 15-2)****.*

1. Place a new gasket (12) on the cylinder block exhaust stud bolts.
2. Loosely secure muffler (1) to muffler bracket (2) with clamp (6).
3. Attach muffler manifold with lock washers (11) and hex nuts (10) and finger tighten.
4. Loosely secure muffler (1), mounting bracket, and governor cable bracket (13) using hex-head cap screw (7), lock washer (8), and flat washer (9).
5. Tighten manifold hex nuts (10) to 11 ft-lb (14.9 N·m).
6. Tighten the hex cap screw (7) to 14 ft-lb (18.9 N·m).
7. Tighten the muffler clamp (6) to 40 in-lb (4.5 N·m).

NOTE: *Removing and installing the governor cable bracket may change the RPM setting.* ***See Pedal-Start vehicles:, Section 14, Page 14-10.***

8. Connect the spark plug wire.

Muffler Installation, Continued:

9. Connect battery cables, positive (+) cable first, and tighten hardware to 12 ft-lb (16 N·m). **See Figure 10-1, Section 10, Page 10-3.** Coat terminals with Battery Terminal Protector Spray (CCI P/N 1014305) to minimize corrosion

10. Place the Forward/Reverse handle in the NEUTRAL position and the neutral lockout cam in the SERVICE (MAINTENANCE) position. Start the engine and check for exhaust leaks and proper engine operation. **See following DANGER.**

⚠ DANGER

- **Do not operate gasoline vehicle in an enclosed area without proper ventilation. The engine produces carbon monoxide, which is an odorless, deadly poison.**

11. After checking the exhaust and engine for proper operation, return the neutral lockout cam to the OPERATE position.

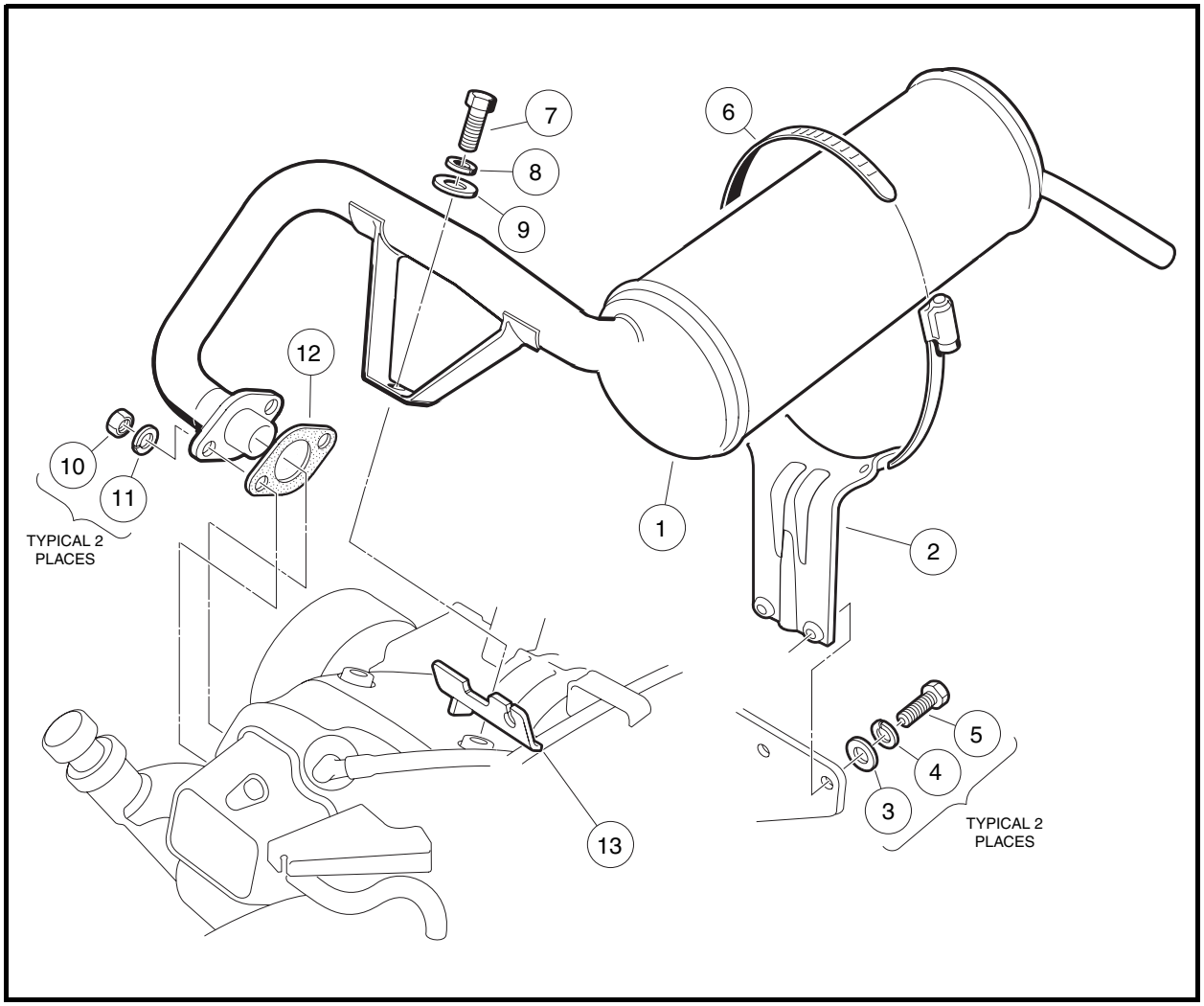

Figure 15-1 Exhaust System

SECTION 16 – UNITIZED TRANSAXLE

⚠ DANGER

- **See General Warning, Section 10, Page 10-1.**

⚠ WARNING

- **See General Warning, Section 10, Page 10-1.**

GENERAL INFORMATION

All gasoline-powered Club Car vehicles manufactured since the beginning of the 1997 model year are equipped with heavy-duty, fully-synchronized Unitized Transaxles. The unitized transaxle utilizes fully-synchronized internal gearing to change vehicle direction. Because the unitized transaxle is used to reverse vehicle direction, the engine, drive clutch, belt, and driven clutch rotate in the same direction; therefore, the engine and clutches are not subjected to reversing loads. This reduces maintenance requirements on the engine and clutches. With the unitized transaxle, power is transferred from the engine through the drive clutch, the drive belt, the driven clutch, and then through the unitized transaxle to the wheels.

Shifter Lever

A shifter lever, connected to a shifter arm, is used to change the gears to one of three shift positions: FORWARD (F), NEUTRAL (N), or REVERSE (R) **(Figure 16-1, Page 16-2)**. Bring the vehicle to a complete stop before changing FORWARD or REVERSE direction.

Neutral Lockout

The pedal-start FE350 vehicle has a neutral lockout circuit that prevents a driver from starting the vehicle in NEUTRAL. If the vehicle is started in FORWARD or REVERSE and then shifted to NEUTRAL, the engine will stop running.

The key-start FE350 vehicle will start in NEUTRAL; however, if the accelerator pedal is pressed while the Forward/Reverse handle is in the NEUTRAL position, the engine will stop running.

For the convenience of the trained technician, there is a neutral lockout cam (yellow knob) located on the back of the Forward/Reverse shifter, inside the engine compartment. If the neutral lockout cam is pulled out approximately 3/8 inch (10 mm) and then rotated one-half turn until it snaps into place, the cam will be in the SERVICE (MAINTENANCE) position:

- **Pedal-Start vehicles:** When the cam is in the SERVICE (MAINTENANCE) position, it will allow the technician to run the engine in NEUTRAL for certain maintenance procedures. With the cam in this position, the vehicle will not operate if the Forward/Reverse handle is placed in either the FORWARD or REVERSE position.
- **Key-Start vehicles:** When the cam is in the SERVICE (MAINTENANCE) position, it will allow the technician to run the vehicle in FORWARD, REVERSE or NEUTRAL for certain maintenance and/or repair functions; however, if the Forward/Reverse handle is in either FORWARD or REVERSE and the accelerator is pressed, the engine will stop running.

To put the cam back into the OPERATE position, pull the cam out approximately 3/8 inch (10 mm) and rotate it one-half turn until it snaps into place.

Governor System

The governor system regulates vehicle ground speed. It is mounted inside the unitized transaxle and is driven by transaxle gears. If any of the governor linkages are removed in order to service other components, readjustment of the governor linkage is required. **See Governor Cable Installation and Adjustment, Section 14, Page 14-8.**

Unitized Transaxle Service

The unitized transaxle is extremely durable and should require very little service under normal operating conditions. The only service required is to maintain proper lubricant level. **See Periodic Lubrication Schedule, Section 10, Page 10-5.** Under normal operating conditions, adjustment to the system should not be required.

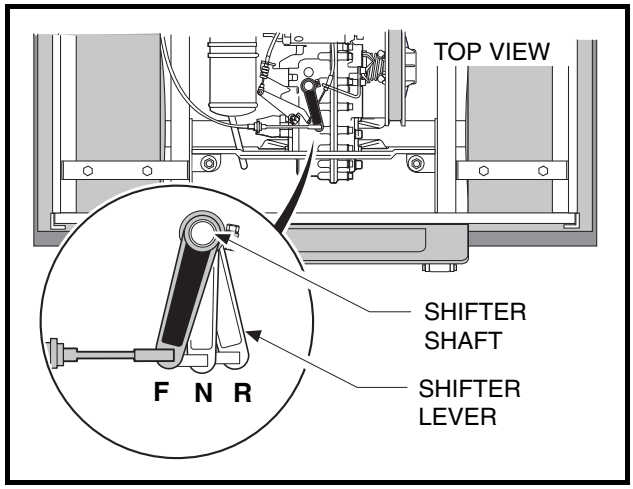

Figure 16-1 Shifter Positions

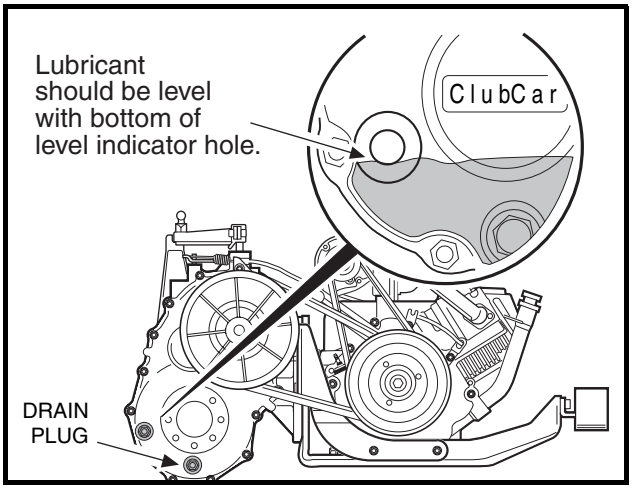

Figure 16-2 Lubricant Level

Tools Required For This Section

Hydraulic floor jack (or chain hoist)	Torque wrench, 3/8-in. drive	1/2-in. combination wrench
Jack stands (2) (one-ton capacity)	3/8-in. socket, 3/8-in. drive	9/16-in. combination wrench
Standard slip joint pliers	7/16-in. socket, 3/8-in. drive	Small flat blade screwdriver
External snap ring pliers (0.047-in. tip)	1/2-inch socket, 3/8-in. drive	Medium flat blade screwdrivers (2)
90° internal snap ring pliers (0.090-in. tip)	9/16-in. socket, 3/8-in. drive	No. 2 phillips-head screwdriver
16-in. rolling-head prybar	5/8-in. socket, 3/8-in. drive	1/4-in. nut driver
Plastic or rubber mallet	Axle seal tool (CCI P/N 1014162)	5/16-in. nut driver
Ratchet wrench, 3/8-in. drive	7/16-in. combination wrench	

LUBRICATION

There are two oil port plugs located on the right (driven clutch) side of the unitized transaxle **(Figure 16-2, Page 16-2)**. When the vehicle is on a level surface, use the upper plug as a lubricant level indicator. Lubricant level should be even with the bottom of level indicator hole. Use the lower plug for draining. When draining lubricant, remove both plugs to allow the lubricant to drain faster. Clean and reinstall the drain plug and gasket before filling the transaxle with new lubricant. Use a funnel when filling the transaxle through the lubricant level indicator hole. Fill with 27 oz. (0.8 liter) 80-90 WT. API class GL or 80-90 WT. AGMA class 5 EP gear lubricant (or until lubricant begins to run out of the level indicator hole). Tighten the plug to 20 ft-lb (27.1 N·m).

AXLE SHAFT

See General Warning, Section 10, Page 10-1.

Removal of the unitized transaxle is not required for servicing or replacing axle shafts, axle bearings, or axle shaft oil seals. If the unitized transaxle is to be removed from the vehicle, then do not remove the wheels, axle shafts, or axle tubes first. Instructions for removing the unitized transaxle from the vehicle begin on page 16-7.

AXLE SHAFT AND OIL SEAL REMOVAL

1. Turn the key switch to the OFF position and remove the key, place the Forward/Reverse handle in the NEUTRAL position, and chock the wheels.
2. Disconnect the battery cables as instructed. **See WARNING "To avoid unintentionally starting..." in General Warning, Section 10, Page 10-1.**
3. Loosen the lug nuts on the wheel to be removed.
4. Place chocks at the front wheels and lift the rear of the vehicle with a floor jack. Then place jack stands under the axle tubes to support the vehicle. **See WARNING "Lift only one end of the vehicle..." in General Warning, Section 10, Page 10-2.**
5. Remove the rear wheel and brake drum.
6. Use 90° internal snap ring pliers (0.090-inch tip) to remove internal retaining ring (1) from axle tube **(Figure 16-3, Page 16-3)**.
7. Carefully pull the axle shaft (2) straight out of the axle tube **(Figure 16-3, Page 16-3)**.

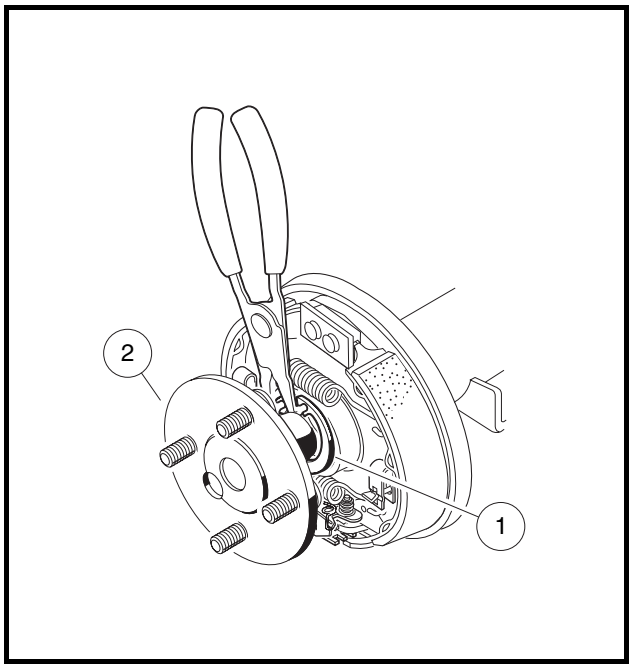

Figure 16-3 Retaining Ring

Axle Shaft and Oil Seal Removal, Continued:

8. Position a 16-inch (40 cm) rolling head prybar **(Figure 16-4, Page 16-4)** under the inside lip of the seal and pull oil seal out **(Figure 16-5, Page 16-4)**. **See following CAUTION.**

⚠ CAUTION

- **Do not scar or damage the inside surfaces of the tube when removing the oil seal. A damaged tube might have to be replaced.**

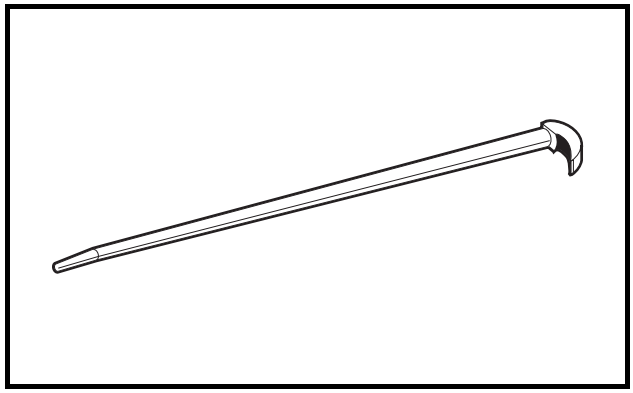

Figure 16-4 Rolling-Head Prybar

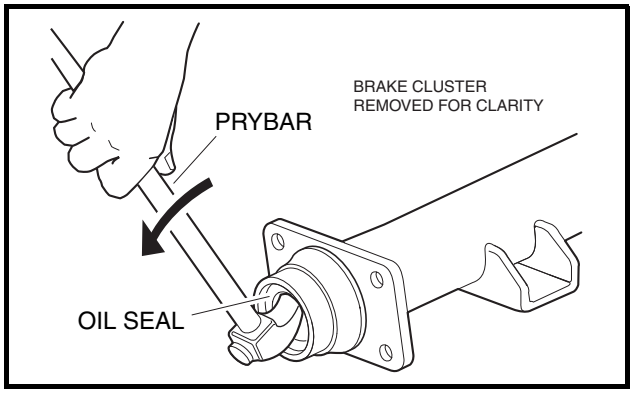

Figure 16-5 Seal Lip

9. Inspect the axle shaft assembly to be sure the bearing (71) and collar (73) have not slipped and are still seated against the shoulder on the axle shaft **(Figure 16-6, Page 16-5)**.
10. Inspect the bearing. If the bearing is damaged or worn, replace it.

AXLE BEARING

Axle Bearing Removal

1. Use external retaining ring pliers (0.047-in. tip) to remove the retaining ring (74). Place a bearing puller wedge attachment (CCI P/N 1012812) on the axle shaft between the wheel mounting flange and the bearing **(Figure 16-6, Page 16-5)**. **See also Figure 16-7, Page 16-7**. **See following CAUTION.**

⚠ CAUTION

- **Do not tighten the bearing puller wedge attachment against the axle shaft. This could damage the axle shaft when pressing the bearing and collar off.**

2. Press the bearing (71) and collar (73) off together **(Figure 16-6, Page 16-5)**. **See also Figure 16-7, Page 16-7**. **See following NOTE.**

NOTE: *It may be necessary to heat the collar to remove it.*

*Do not remove the large axle retaining ring (70) from the axle **(Figure 16-6, Page 16-5)**. Since the inner diameter of the retaining ring (70) is smaller than the outer diameter of the bearing (71), the ring must be in place on the axle before a new bearing and collar are pressed on.*

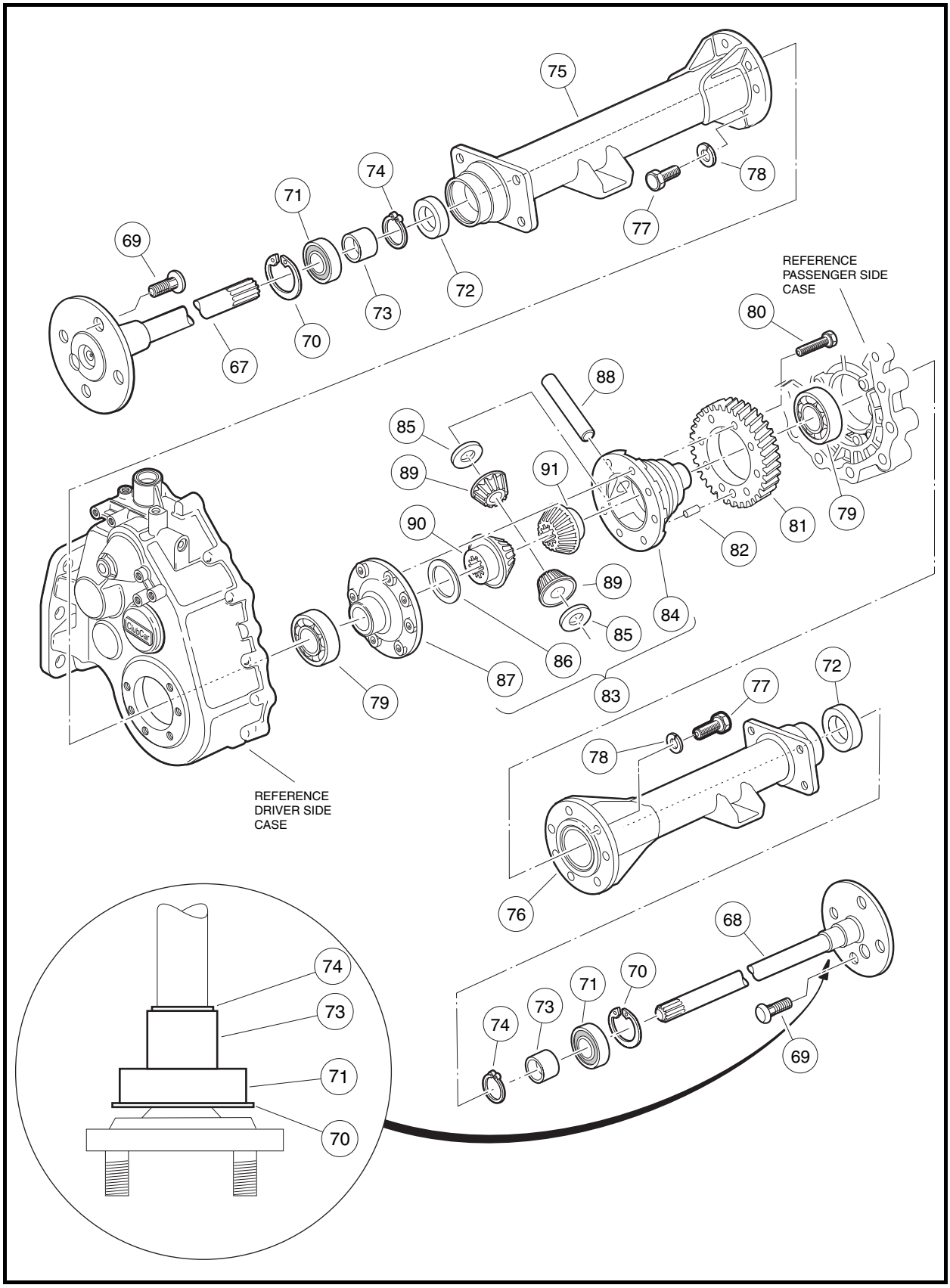

Figure 16-6 Differential Gear Case/Axle Tubes

Axle Bearing Installation

1. Ensure that the retaining ring (70) is loosely placed on the axle shaft. **See preceding NOTE.**
2. Install a new axle bearing (71) on axle (67 or 68). Push bearing onto axle until bearing is flush against axle shoulder **(Figure 16-6, Page 16-5)**.
3. Apply two drops of Loctite 271® to inside of the collar. **See following CAUTION.**

⚠ CAUTION

- **Apply Loctite 271 to the inside of the collar only, not to the shaft, so that the Loctite will be pushed away from the bearing as the collar and bearing are pressed on. If Loctite gets on or in the bearing, the bearing must be replaced.**
- **The collar should be removed no more than two times. If a collar is removed a third time, the shaft and collar will not fit properly.**

4. Place a new sealed bearing (71) on shaft (67 or 68) **(Figure 16-6, Page 16-5)**.
5. Install collar (73) onto axle shaft. Place axle assembly on bearing puller wedge attachment and press collar onto axle.
6. Place the bearing puller wedge attachment against collar and press both bearing and collar onto shaft. **See following CAUTION.**

⚠ CAUTION

- **If the bearing was removed from the shaft, replace it with a new one.**
- **Do not tighten the bearing puller wedge attachment against the axle shaft. This could damage the axle shaft when the bearing and collar are pressed on.**

7. Use external snap ring pliers (0.047-inch tip) to install collar retaining ring (74) **(Figure 16-6, Page 16-5)**.

AXLE SHAFT INSTALLATION

1. Clean bearing and seal seats in axle tube (75 or 76) **(Figure 16-6, Page 16-5)**.
2. Place a new oil seal (72) in axle tube with seal lip facing inside of the axle tube **(Figure 16-6, Page 16-5)**. Use an axle seal tool (CCI P/N 1014162) to press it in until it seats firmly in position **(Figure 16-8, Page 16-7)**. **See following NOTE.**

NOTE: *The new seal can be installed by tapping the axle seal tool with a mallet.*

⚠ CAUTION

- **Clean any residual oil from the exposed end of the axle shaft and from the oil seal area prior to installing the axle shaft.**

3. Clean the axle shaft and splines and then insert the shaft, splined end first, through the seal and into the axle tube. Be careful not to damage the seal. Then advance the shaft through the inner bearing and rotate it to align the shaft splines with the splined bore of the differential side gear. Continue advancing the shaft until the bearing seats against the axle tube shoulder.
4. Install the bearing retaining ring (70) in the axle tube **(Figure 16-6, Page 16-5)**. **See also Figure 16-3, Page 16-3.**

5. Place a 1/4 to 3/8-inch (6-10 mm) diameter rod against the retaining ring and tap lightly at four to five locations to ensure it is properly seated. **See following WARNING.**

⚠ WARNING

- **Be sure bearing retaining ring is properly seated in its groove. If ring is not properly installed, the axle assembly will separate from the transaxle and damage the axle assembly and other components. Loss of vehicle control could result in severe personal injury or death.**

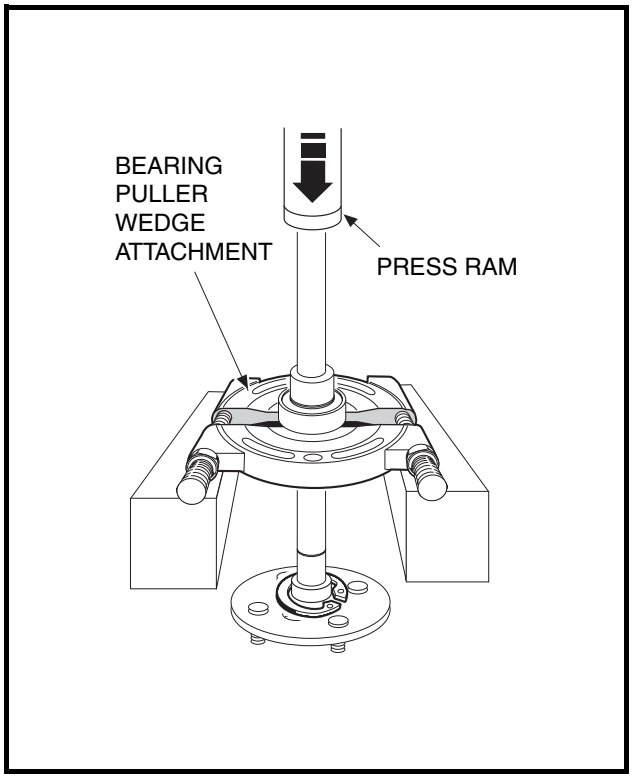

Figure 16-7 Bearing and Collar

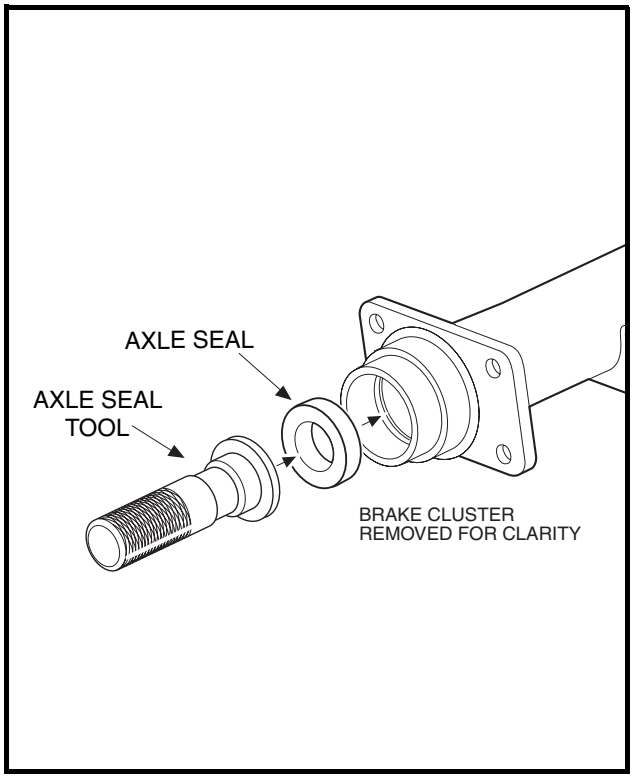

Figure 16-8 Axle Seal Tool

UNITIZED TRANSAXLE REMOVAL

See General Warning, Section 10, Page 10-1.

1. Turn the key switch to the OFF position and remove the key, and place the Forward/Reverse handle in the NEUTRAL position.
2. Disconnect the battery cables as instructed. **See WARNING "To avoid unintentionally starting..." in General Warning, Section 10, Page 10-1.**
3. Close the fuel shut-off valve on fuel tank. **See Figure 14-16, Section 14, Page 14-27.**

Unitized Transaxle Removal, Continued:

4. Detach all wires, hoses, etc. connecting the powertrain to the vehicle.

   4.1. Disconnect the carburetor vent tube from the carburetor **(Figure 16-9, Page 16-8)**.

   4.2. Disconnect the air intake hose from the carburetor **(Figure 16-10, Page 16-8)**.

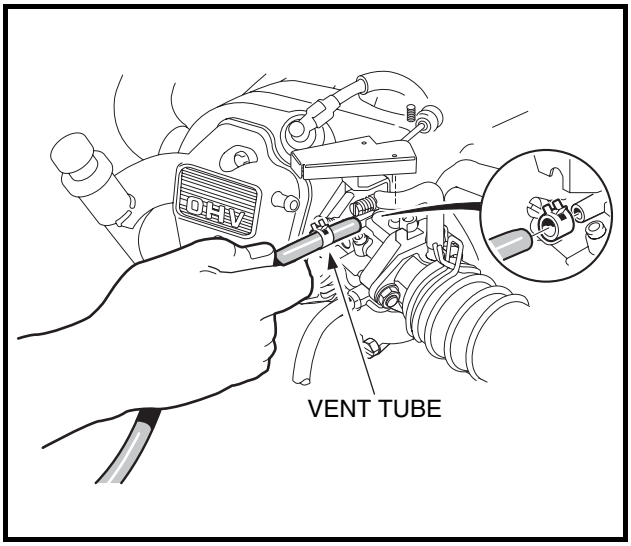

Figure 16-9 Fuel Vent Tube

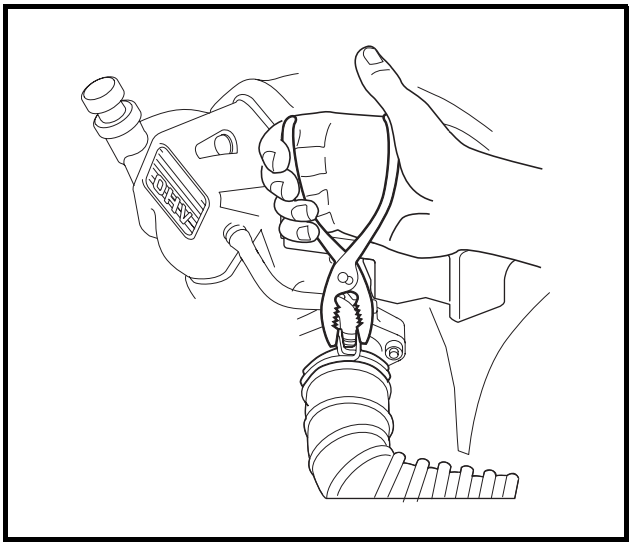

Figure 16-10 Air Intake Hose

   4.3. Disconnect impulse line from fuel pump **(Figure 16-11, Page 16-8)**.

   4.4. Loosen the hose clamp and then disconnect the fuel line from the carburetor. To prevent spilling fuel, the disconnected end of the line can be plugged with a 1/4-inch bolt **(Figure 16-12, Page 16-8)**.

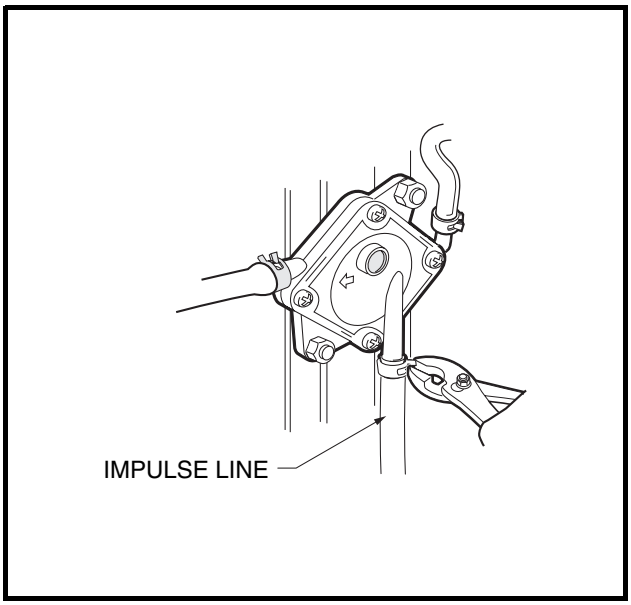

Figure 16-11 Impulse Line

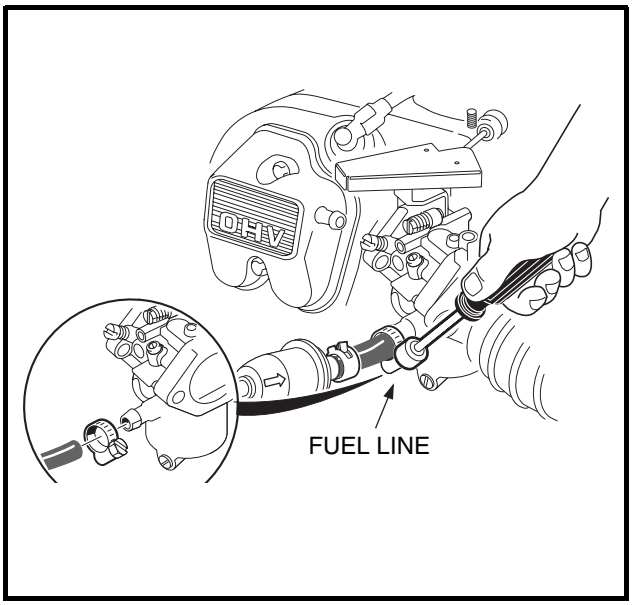

Figure 16-12 Fuel Line

4.5. Remove the cover from the electrical component box. Then loosen the hardware securing the accelerator cable to the box. Disconnect the cable from the actuator cam and remove it from the box **(Figure 16-13, Page 16-9)**.

4.6. Remove retaining nut and disconnect the engine ground wire from the oil filler tube mounting bracket **(Figure 16-14, Page 16-9)**.

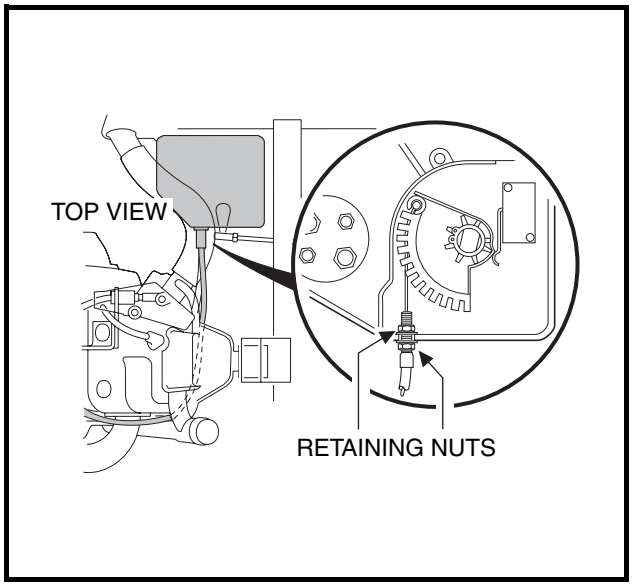

Figure 16-13 Throttle Cable

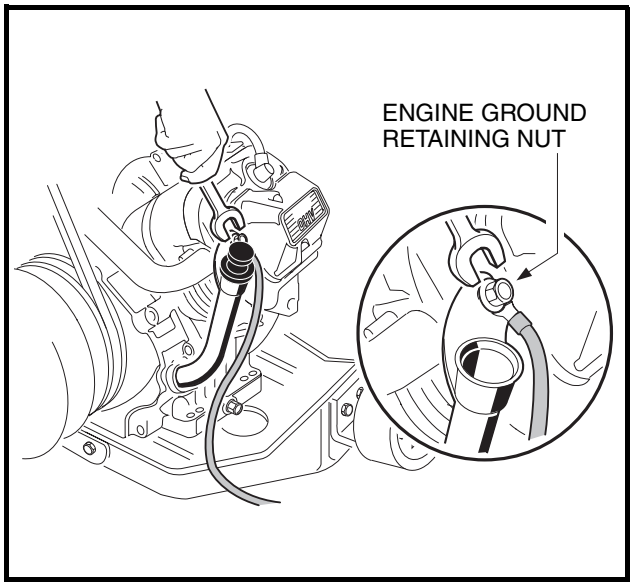

Figure 16-14 Engine Ground Wire

4.7. Loosen nuts securing shifter cable to shifter cable mounting bracket. Then disconnect the shifter cable rod end from the shifter arm on the unitized transaxle and remove the cable from the cable mounting bracket **(Figure 16-15, Page 16-9)**.

4.8. Mark for identification and then disconnect the 6-gauge white wire (F2 post), 6-gauge black ground wire (A2 post), and 16-gauge yellow wire (DF post) from starter/generator **(Figure 16-16, Page 16-9)**.

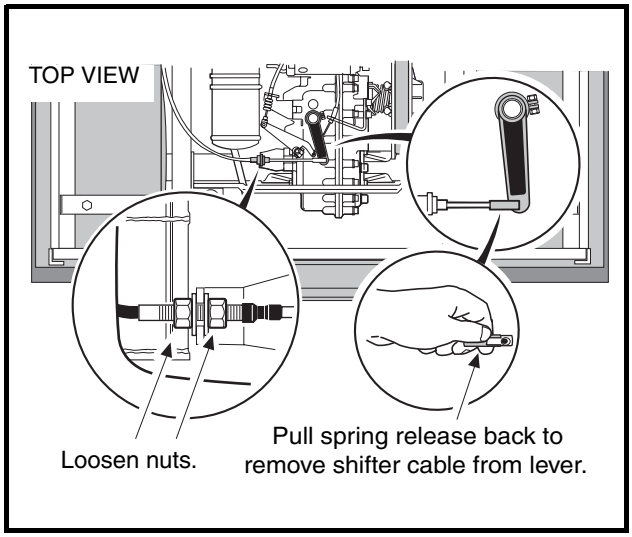

Figure 16-15 Shifter Cable

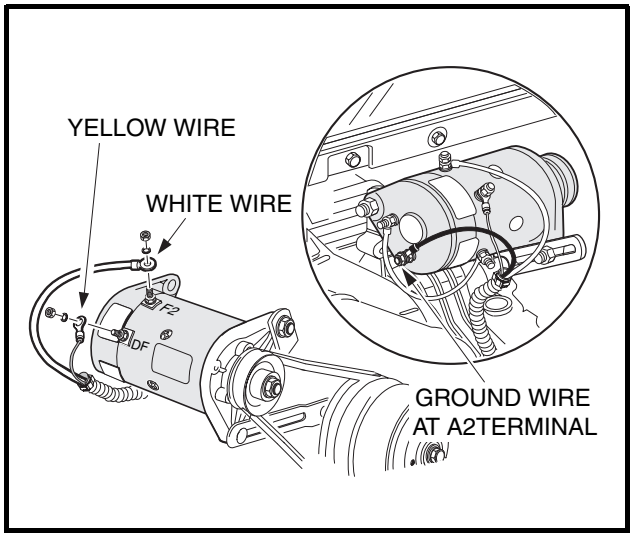

Figure 16-16 Generator Wires

Unitized Transaxle Removal, Continued:

4.9. Disconnect the engine oil level sensor wire (18-gauge yellow) at the connector just to the rear of the starter/generator) **(Figure 16-17, Page 16-10)**.

4.10. Disconnect the engine kill switch wire (18-gauge white/black) from the bullet connector at the lower right front of the engine **(Figure 16-18, Page 16-10)**.

4.11. Cut away the wire ties securing the engine kill wire at the lower right front of the engine (below the exhaust header), the wire harness at the governor cable bracket, and the wire harness to the plate beneath the muffler.

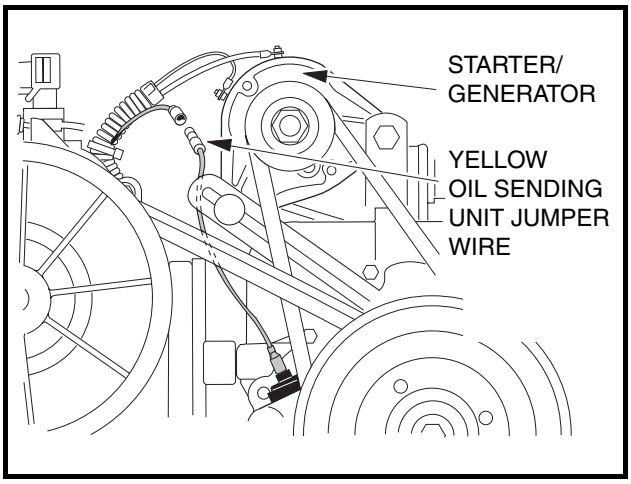

Figure 16-17 Oil Level Sensor Jumper Wire

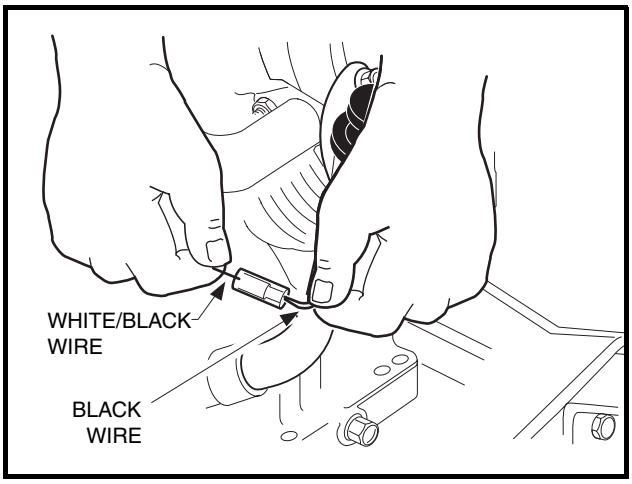

Figure 16-18 Ignition Kill Wire

5. Disconnect the brake cables.

5.1. Remove bow tie pin (1), brake cable clevis pin (2), and E-clip (3) **(Figure 16-19, Page 16-10)**.

5.2. Remove the cable from the cable support bracket **(Figure 16-19, Page 16-10)**.

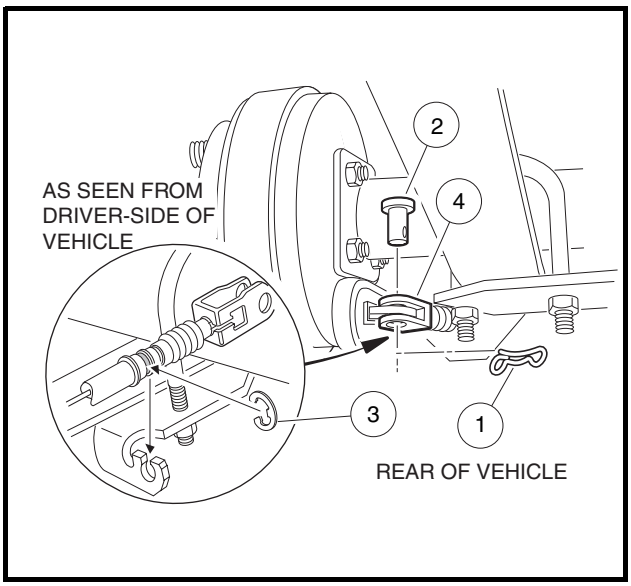

Figure 16-19 Brake Cable

6. Remove the lower shock mounting hardware from both rear shocks **(Figure 16-20, Page 16-11)**.
7. If equipped with a stabilizer bar, remove the two belts securing the stabilizer bar to the stabilizer bar links. **See Section 9 – Rear Suspension in the appropriate maintenance and service manual.**
8. Position a floor jack under the vehicle frame crossmember or trailer hitch mount **(Figure 16-21, Page 16-11)**.

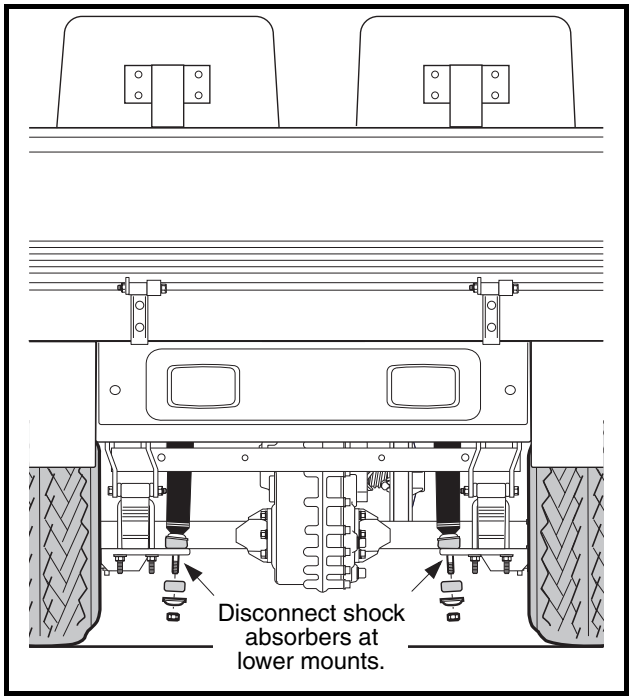

Figure 16-20 Shock Absorbers

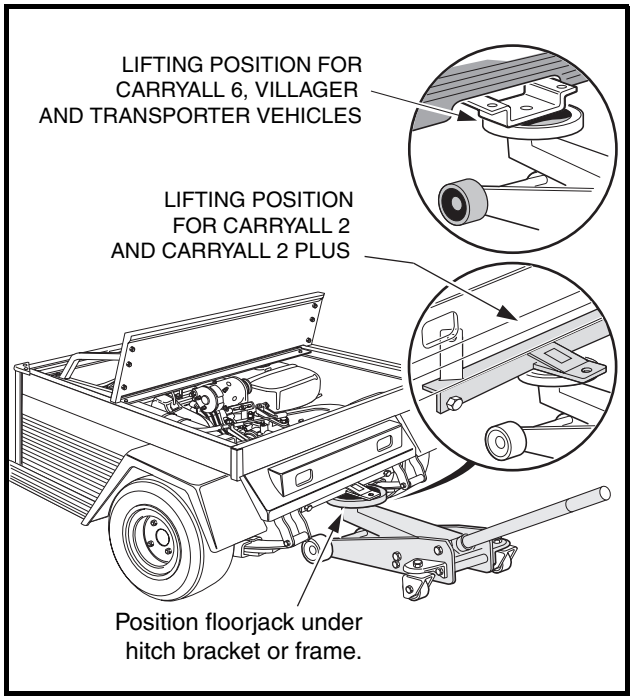

Figure 16-21 Floor Jack

9. Raise vehicle just enough to relieve tension from leaf springs, then remove the bolts securing the leaf springs to the shackles **(Figure 16-22, Page 16-11)**.
10. Remove the bolts securing the leaf springs to their front mounts **(Figure 16-23, Page 16-11)**.

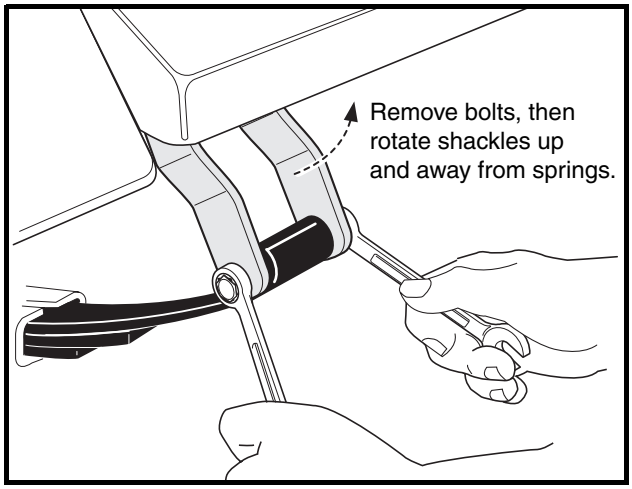

Figure 16-22 Rear Shackles

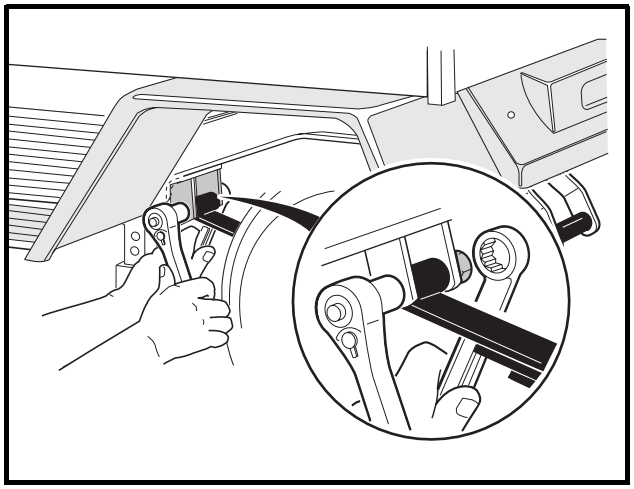

Figure 16-23 Spring Retainer Bolts

Unitized Transaxle Removal, Continued:

11. Continue raising vehicle until frame or trailer hitch is higher than the top of the unitized transmission (enough to allow transaxle and engine to be rolled under and out of vehicle) **(Figure 16-24, Page 16-12)**.
12. Position jack stands, adjusted to support the vehicle at this height, under the frame crossmember between the leaf spring mounts and side stringers, just forward of each rear wheel. Lower the floor jack to allow the jack stands to support the vehicle **(Figure 16-25, Page 16-12)**.

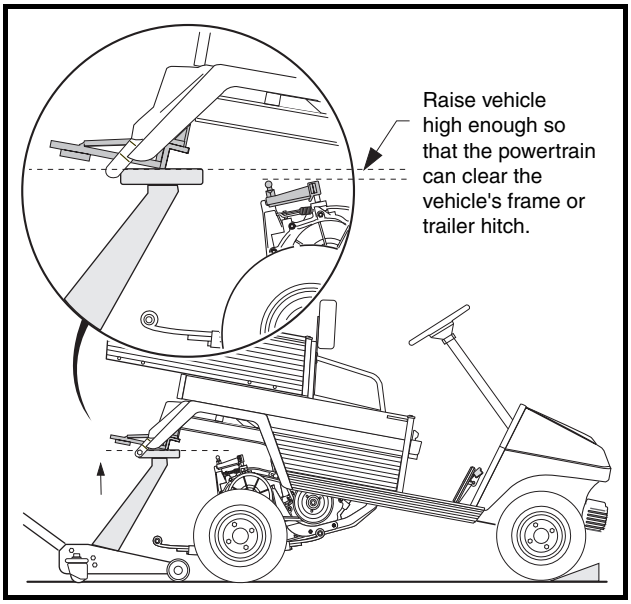

Figure 16-24 Raise Vehicle

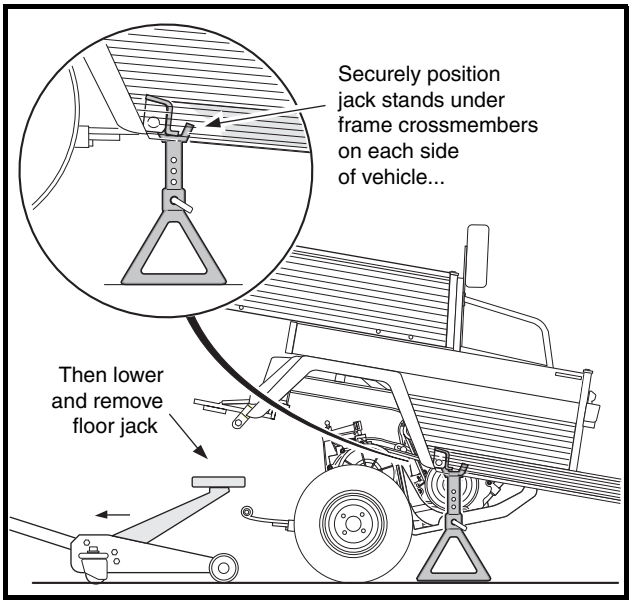

Figure 16-25 Position Jack Stands

13. Pull the floor jack from beneath the vehicle and move it away.
14. Carefully lift the snubber out of the snubber bracket in the vehicle frame and lower it to the floor **(Figure 16-26, Page 16-12)**. The powertrain should be completely disconnected from the vehicle and resting on the floor.
15. Grasp the ends of the leaf springs at the rear of the vehicle and roll the powertrain out from under the vehicle **(Figure 16-27, Page 16-12)**.

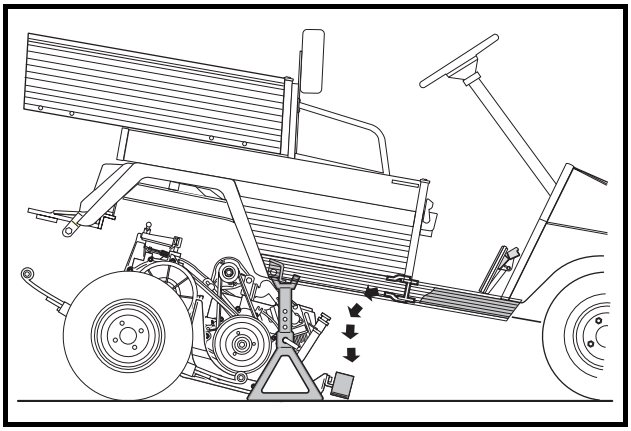

Figure 16-26 Snubber

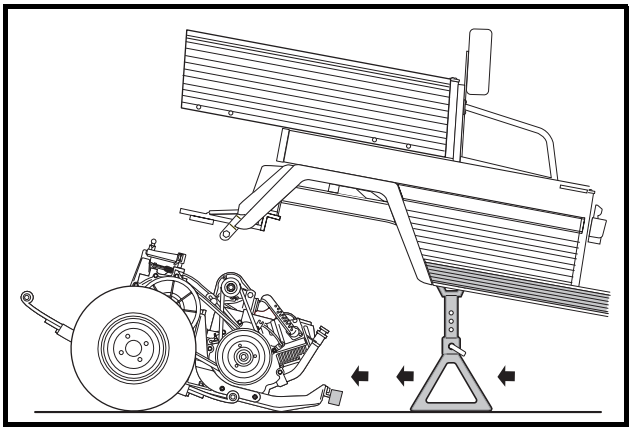

Figure 16-27 Remove Powertrain

16. Place blocks under the engine pan so they will completely support the engine and keep it **level to the floor (Figure 16-28, Page 16-13)**. **See following NOTE.**

NOTE: *Place the blocks so they will support the engine when the transaxle is detached and moved away from the engine.*

17. Remove the drive belt.

    17.1. Grasp belt midway between drive and driven clutch and pull up on belt to force the driven clutch sheaves apart. Roll the belt counterclockwise while pulling it off driven clutch **(Figure 16-29, Page 16-13)**.

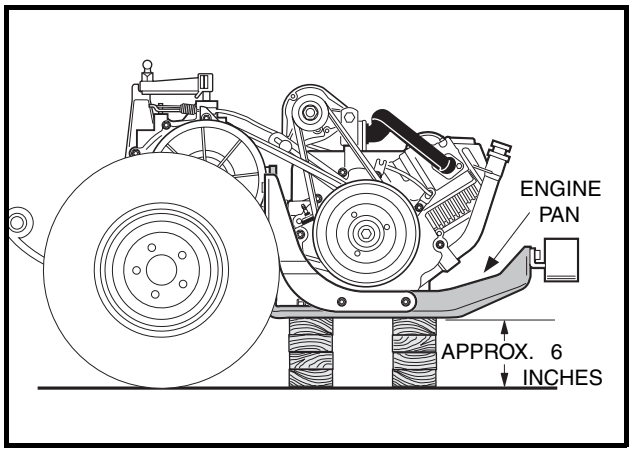

Figure 16-28 Position Powertrain

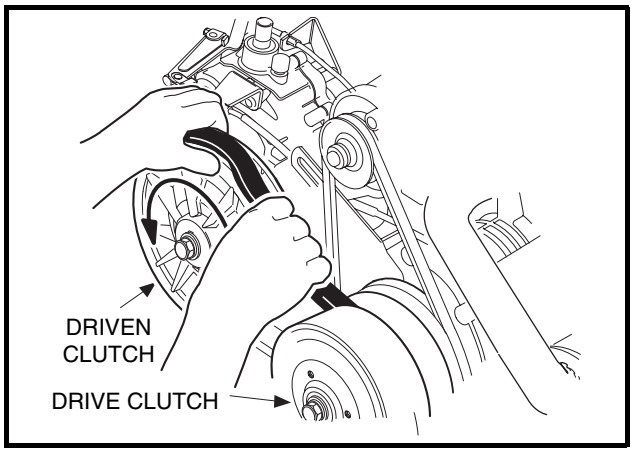

Figure 16-29 Remove Drive Belt

18. Remove the driven clutch retaining bolt and remove the driven clutch from the unitized transaxle **(Figure 16-30, Page 16-13)**.

19. Loosen, but do not remove, the governor arm retaining bolt (1) **(Figure 16-31, Page 16-13)**. Remove the governor arm from the shaft. Do not disconnect cables.

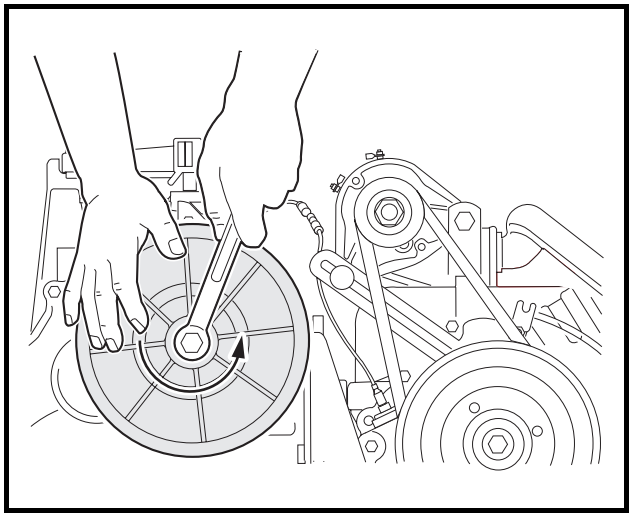

Figure 16-30 Driven Clutch

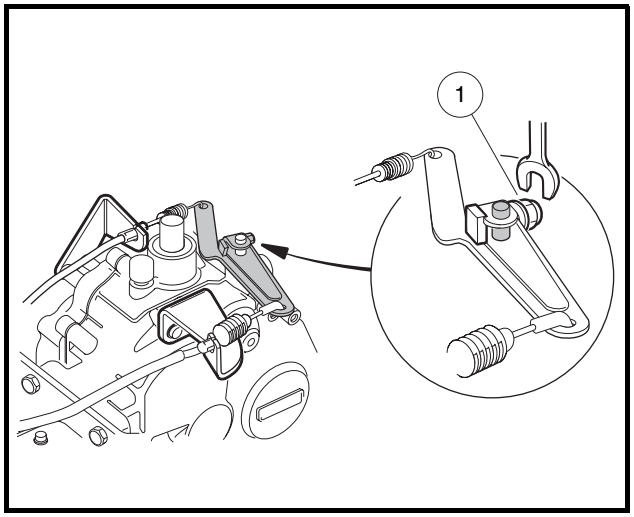

Figure 16-31 Governor Arm

20. Remove screws (1) securing the governor cable bracket to transaxle **(Figure 16-32, Page 16-14)**.

21. Remove screws (1) securing the accelerator cable bracket to transaxle **(Figure 16-33, Page 16-14)**.

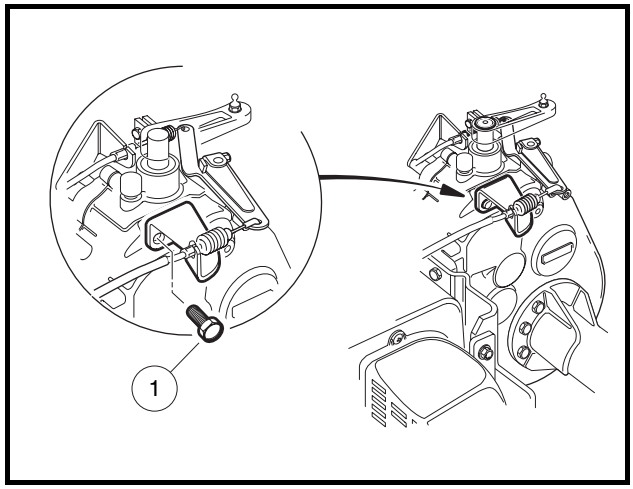

Figure 16-32 Governor Cable Bracket

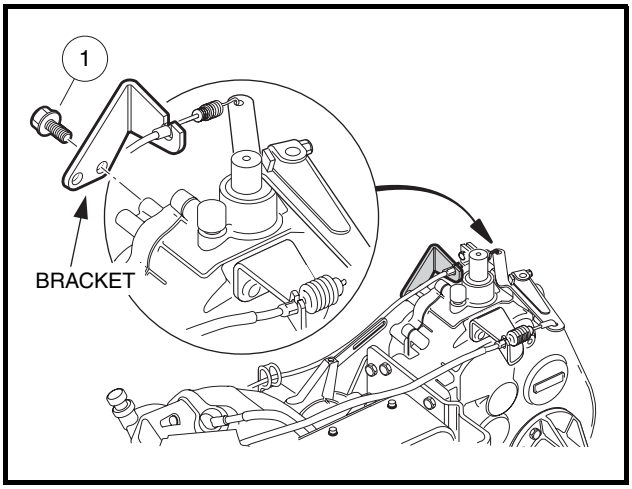

Figure 16-33 Accelerator Cable Bracket

22. Remove screws (2) securing the transmission shift cable bracket (1) to transaxle **(Figure 16-35, Page 16-15)**. **See following NOTE.**

NOTE: *The governor cable and the accelerator cable should remain attached to the governor arm.*

23. Remove the six bolts mounting the unitized transaxle to the engine.

    23.1. Remove four transaxle mounting bolts and flat washers (one at each corner of the transaxle mounting plate) **(Figure 16-34, Page 16-14)**.

    23.2. Remove two middle transaxle mounting nuts from the engine block studs **(Figure 16-34, Page 16-14)**.

24. Remove leaf springs, stabilizer bar, wheels and brake assemblies from the transaxle.

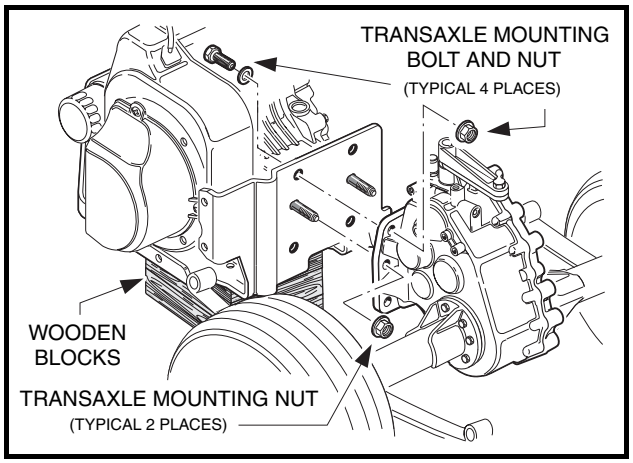

Figure 16-34 Transaxle Mounting

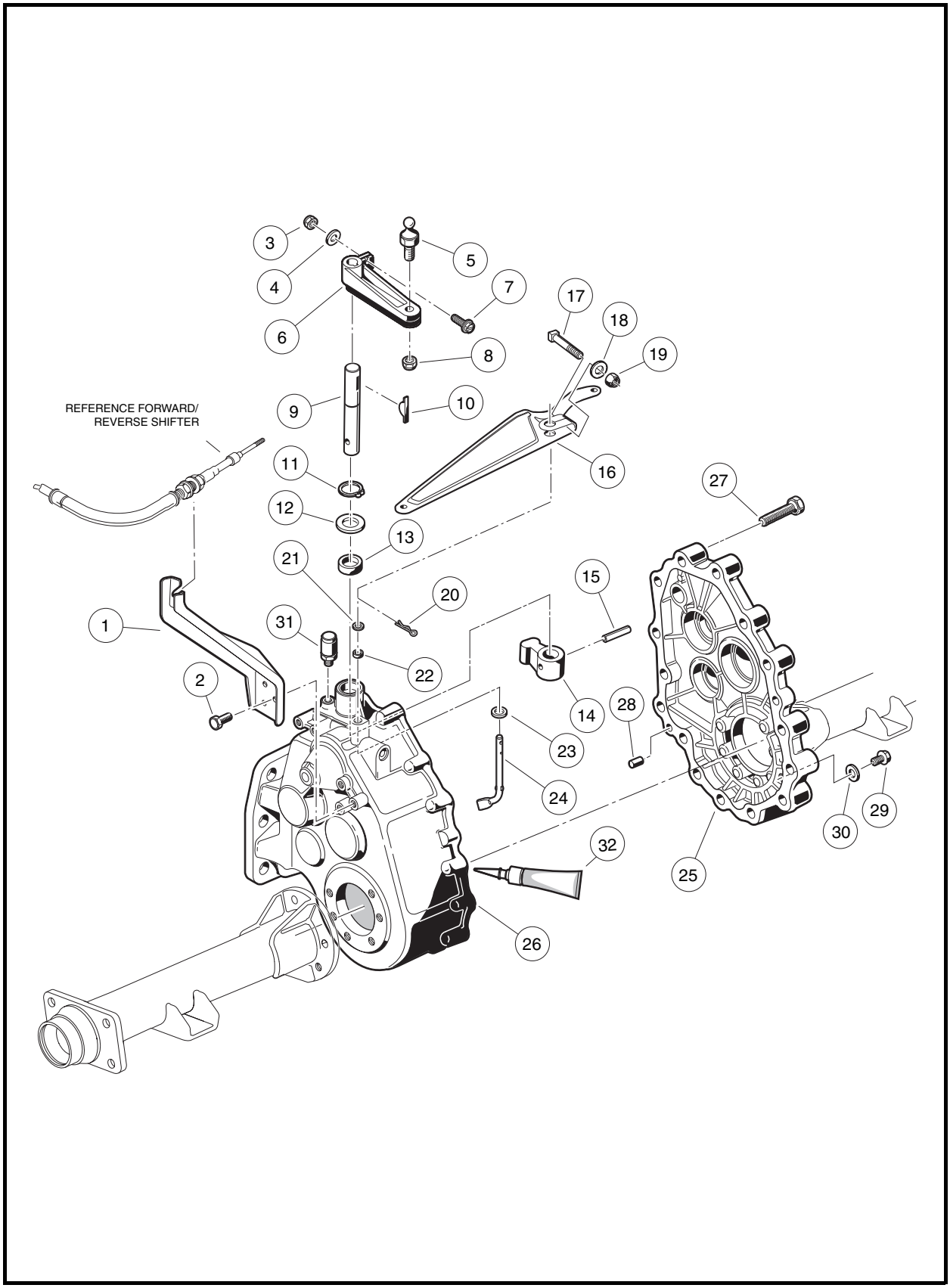

Figure 16-35 Transaxle Gear Casing and Brackets

UNITIZED TRANSAXLE INSTALLATION

See General Warning, Section 10, Page 10-1.

1. Install the wheels. **See Wheel Installation, Section 8 – Wheels and Tires, in the appropriate maintenance and service manual.**
2. Install the leaf springs. **See Leaf Spring Installation, Section 9 – Rear Suspension, in the appropriate maintenance and service manual.**
3. Install the stabilizer bar and jounce bumpers (if used) on the transaxle. **See Section 9 – Rear Suspension in the appropriate maintenance and service manual.**
4. Position the transaxle mounting plate on the two mounting studs at the rear of the engine, and then install the two mounting nuts finger tight **(Figure 16-36, Page 16-16)**.
5. Install the remaining four mounting bolts, four flat washers, and four nuts (one bolt and nut at each corner of the mounting plate) finger tight **(Figure 16-34, Page 16-14)**.
6. Tighten the four corner nuts (with bolts) to 23 ft-lb (31.2 N·m). Tighten the two center nuts (on the engine block studs) to 17 ft-lb (23.1 N·m) **(Figure 16-36, Page 16-16)**.
7. Install the accelerator cable bracket on transaxle case. Tighten the mounting screws to 134 in-lb (15.1 N·m) **(Figure 16-33, Page 16-14)**.

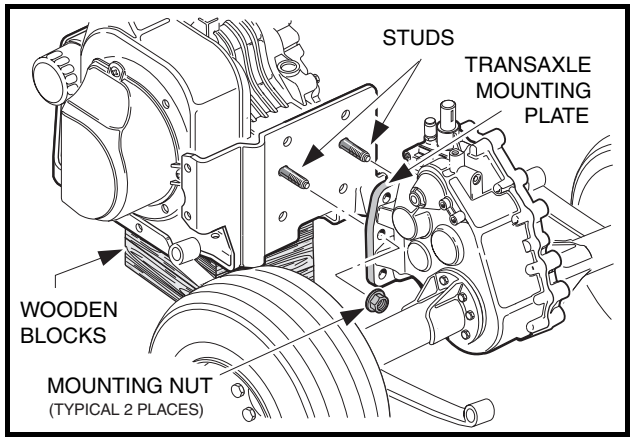

Figure 16-36 Transaxle Mounting

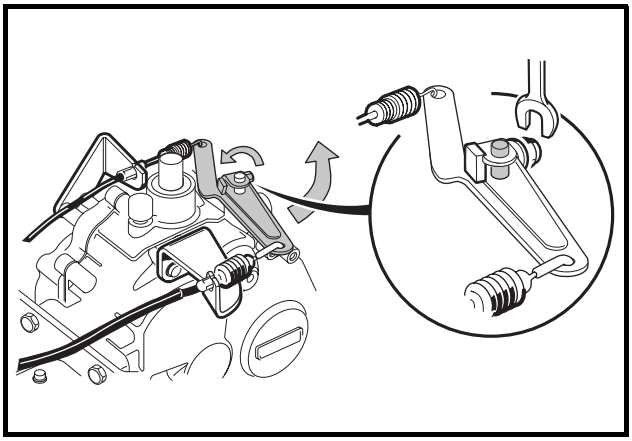

Figure 16-37 Governor Arm

8. Install the governor cable bracket on transaxle case. Tighten the mounting screws to 134 in-lb (15.1 N·m) **(Figure 16-32, Page 16-14)**.
9. Install governor lever arm on governor shaft **(Figure 16-37, Page 16-16)**.
   - 9.1. With the governor lever arm loose on the governor shaft, turn the governor arm shaft counterclockwise until it stops. Then pull the governor lever arm rearward until the carburetor throttle is in the “wide open throttle” (WOT) position **(Figure 16-37, Page 16-16)**.
   - 9.2. While holding the arm and shaft in the fully counterclockwise position, tighten the governor arm lever nut to 35 in-lb (4.0 N·m) **(Figure 16-37, Page 16-16)**.
10. Install the key onto the input shaft **(Figure 16-38, Page 16-17)**.
11. Position the driven clutch on the transaxle input shaft and install the washer (yellow side facing out) and mounting bolt. Tighten the mounting bolt to 14 ft-lb (19.0 N·m) **(Figure 16-38, Page 16-17)**.
12. Install the drive belt. **See Drive Belt Installation, Section 17, Page 17-3.**

13. Remove the blocks from under the engine and roll the powertrain into position under the vehicle. Then lift the front of the powertrain and place the snubber into the snubber bracket in the vehicle frame **(Figure 16-39, Page 16-17)**.

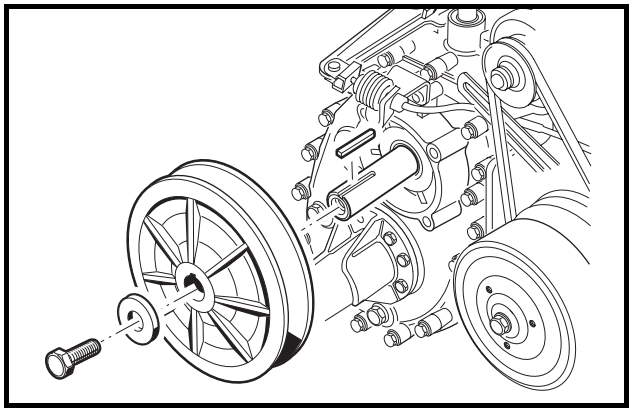

Figure 16-38 Driven Clutch

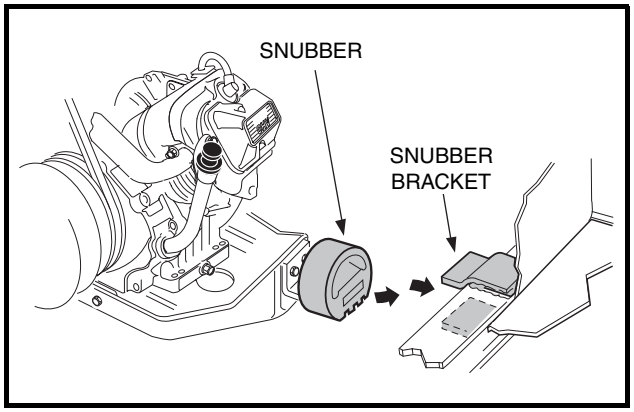

Figure 16-39 Snubber

14. Position the floor jack under the rear frame crossmember and raise the jack high enough to support the vehicle **(Figure 16-40, Page 16-17)**. Make sure the vehicle is stable on the jack, then remove the jack stands.
15. After the jack stands are removed, lower the vehicle to approximately its normal height. Position the leaf springs in the front spring mounts and install the bolts and lock nuts. Tighten to 15 ft-lb (20.3 N·m) **(Figure 16-40, Page 16-17)**.
16. Adjust the vehicle height with the floor jack to position the leaf springs for mounting in the shackles. Install the mounting bolts, and lock nuts **(Figure 16-41, Page 16-17)**.

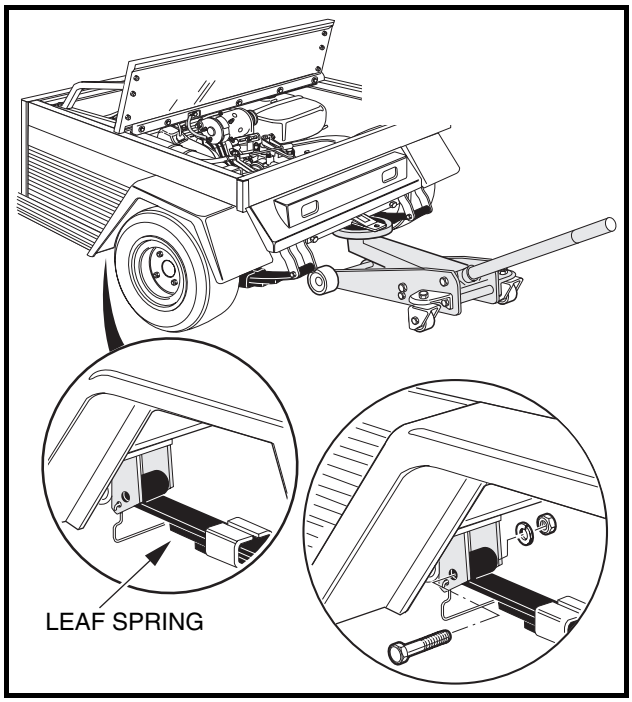

Figure 16-40 Leaf Springs

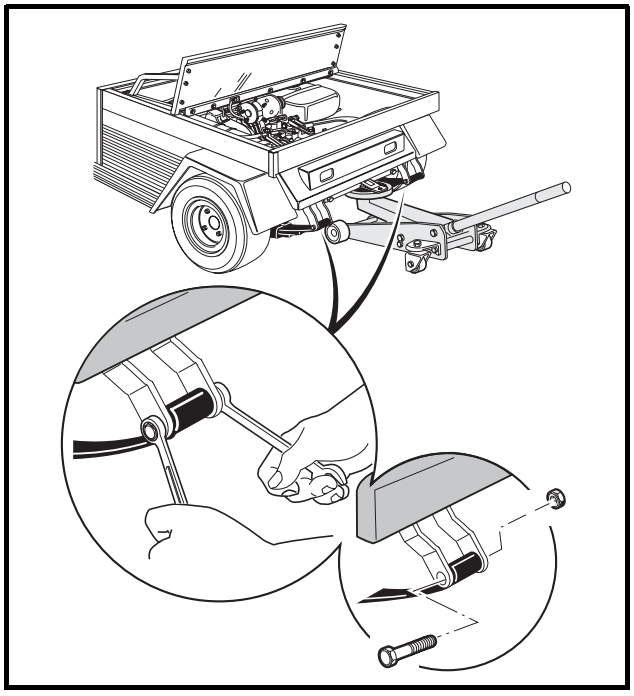

Figure 16-41 Leaf Springs and Shackles

Unitized Transaxle Installation, Continued:

17. If equipped with a stabilizer bar, use the floor jack to position the powertrain, and install the stabilizer bar. **See Section 9 – Rear Suspension in the appropriate maintenance and service manual.**
18. Position shocks in the shock mounts and install cushions, mounting washers and nuts **(Figure 16-42, Page 16-18)**. Tighten nuts until cushions expand to be the same diameter as the mounting washers.
19. Connect brake cables. **See Brake Cable Installation, Section 6 – Wheel Brake Assemblies, in the appropriate maintenance and service manual.**
20. Connect the engine kill switch wire (18-gauge white/black) to the bullet connector at the lower right front of the engine **(Figure 16-43, Page 16-18)**.
21. Install three wire ties to secure the engine kill wire to the accelerator cable where they both route together on the passenger side of the engine.

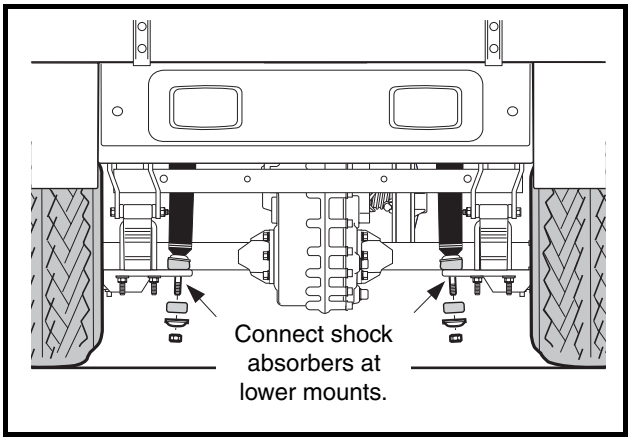

Figure 16-42 Shock Absorber

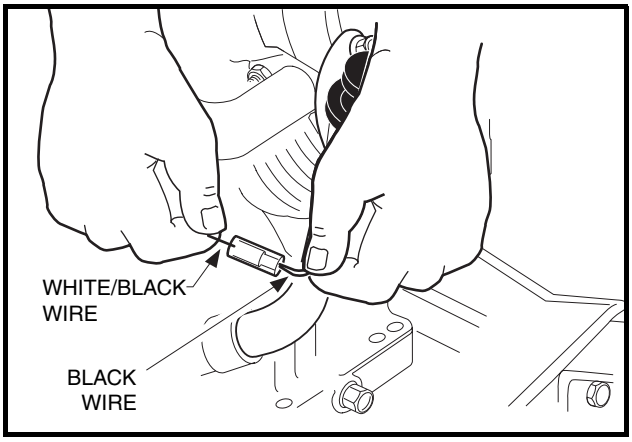

Figure 16-43 Ignition Kill Wire

22. Connect the oil level sensor wire (18-gauge yellow) to the jumper wire **(Figure 16-44, Page 16-18)**.
23. Connect the 6-gauge white wire to the F2 post, the 6-gauge black ground wire to the A2 post and tighten both wires to 48 in-lb (5.4 N·m). Connect the 16-gauge yellow wire to the DF post on the starter/generator and tighten to 30 in-lb (3.4 N·m) **(Figure 16-45, Page 16-18)**.

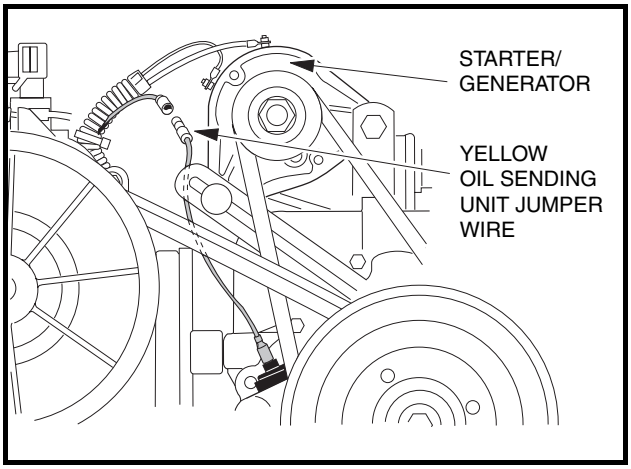

Figure 16-44 Oil Level Sensor Jumper wire

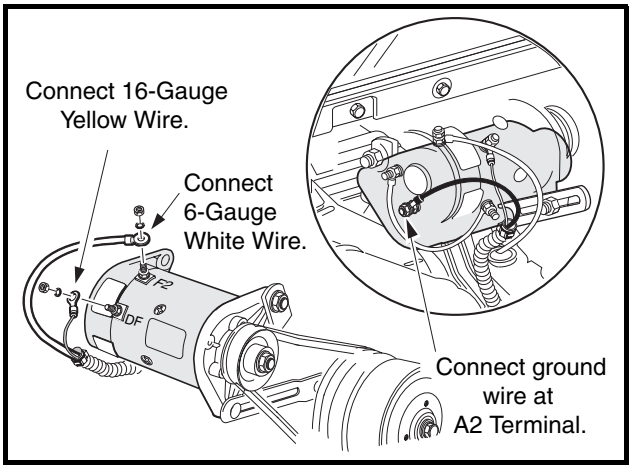

Figure 16-45 Starter/Generator

24. Connect the Forward/Reverse shifter and bracket to the transaxle.
    24.1. Install the three screws (2) securing the Forward/Reverse shifter cable bracket (1) to the transaxle and tighten them to 135 in-lb (15.3 N·m) **(Figure 16-35, Page 16-15)**.
    24.2. Place the woodruff key (10) on the shifter shaft (9).
    24.3. Place the shifter lever (6) (aligned with the woodruff key) onto the Forward/Reverse shaft (9).
    24.4. Install the nut (3), washer (4), and bolt (7) on the Forward/Reverse shifter lever and tighten to 23 in lb (4.1 N·m).
25. Position the shifter cable in the shifter cable mounting bracket on the transaxle and tighten the mounting nuts to 22 ft-lb (29.8 N·m). Connect shifter cable rod end to the shifter arm **(Figure 16-46, Page 16-19)**.
26. Attach the ground wire to the mounting screw on the oil filler tube mounting bracket and tighten to 50 in-lb (5.7 N·m) **(Figure 16-47, Page 16-19)**.

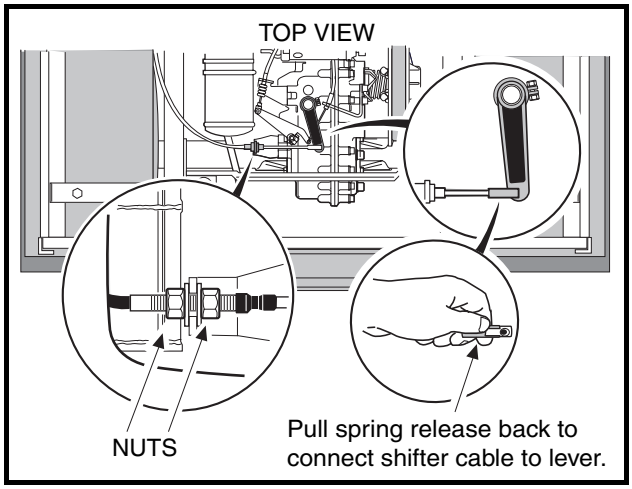

Figure 16-46 Connect Shifter Cable

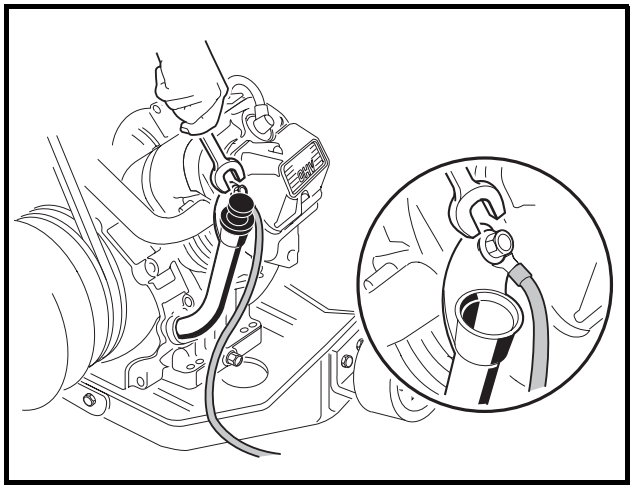

Figure 16-47 Engine Ground

27. Connect accelerator cable to actuator cam in the electrical box. Position the accelerator cable in mounting slot in the wall of the electrical box and tighten mounting nuts to 18 in-lb (2.0 N·m) **(Figure 16-48, Page 16-19)**. Install electrical box cover and tighten mounting screw.
28. Remove the 1/4-inch bolt from the fuel line and connect the fuel line to the carburetor and secure with a hose clamp **(Figure 16-49, Page 16-19)**.

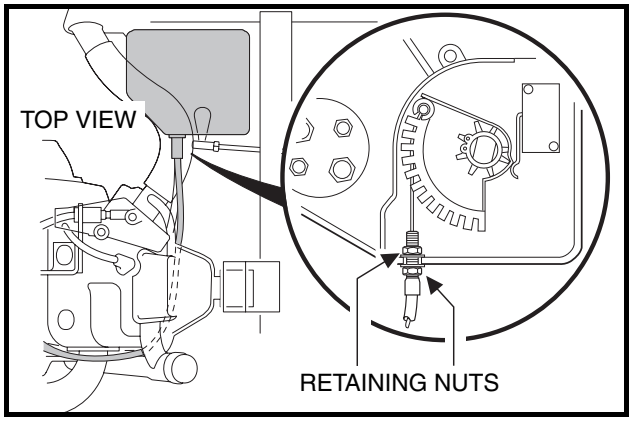

Figure 16-48 Connect Cable to Cam

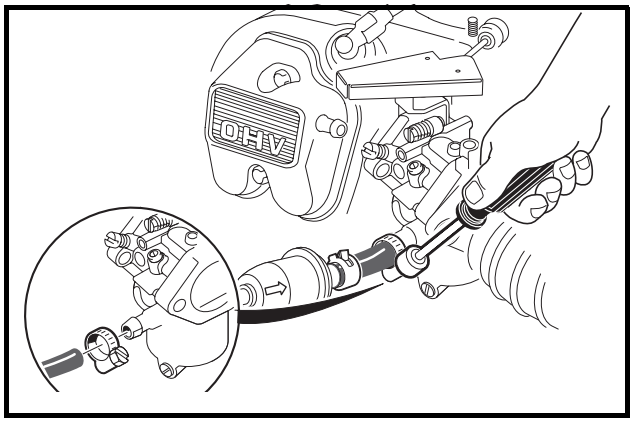

Figure 16-49 Connect Fuel Line

Unitized Transaxle Installation, Continued:

29. Connect the impulse line to the fuel pump and secure it with the hose clamp **(Figure 16-50, Page 16-20)**.

30. Connect air intake hose to carburetor and secure hose clamp **(Figure 16-51, Page 16-20)**.

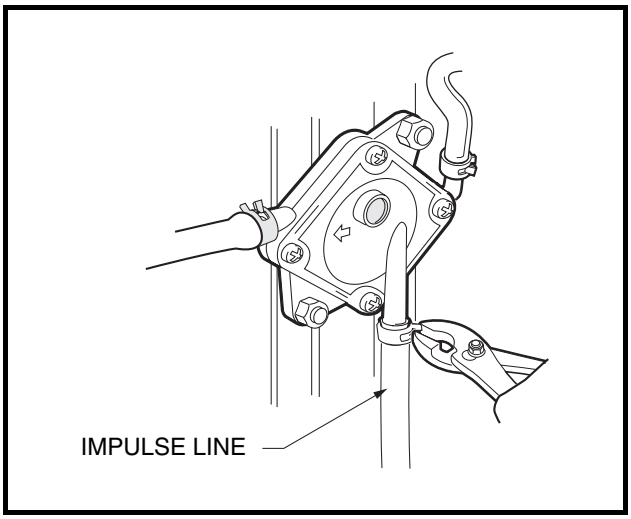

Figure 16-50 Impulse Line

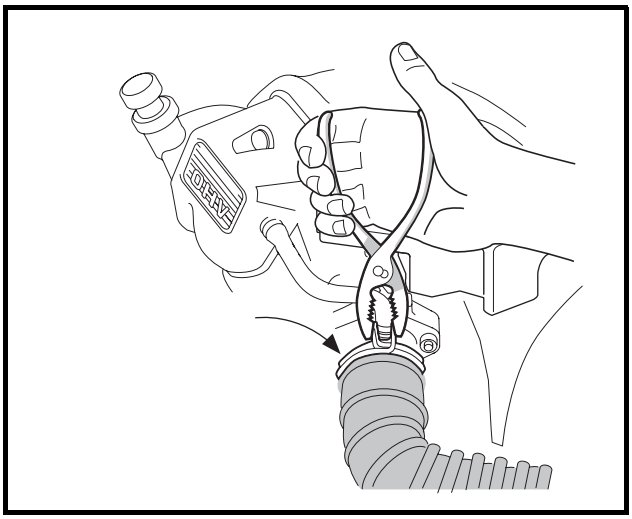

Figure 16-51 Air Intake Hose

31. Connect carburetor vent tube to carburetor and secure with hose clamp **(Figure 16-52, Page 16-20).**

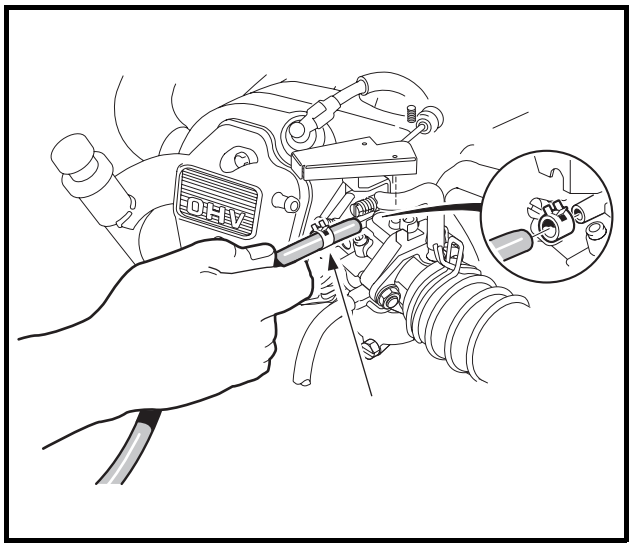

Figure 16-52 Carburetor Tube

32. Install transaxle drain plug and tighten to 21 ft-lb (28.5 N·m).

33. Fill transaxle with 27 oz. (0.8 liter) 80-90 WT. API class GL-3 or 80-90 WT. AGMA class EP gear lube. Install and tighten the level indicator hole plug to 21 ft-lb (28.5 N·m).

34. Ensure that all wiring is secured properly. **See following WARNING.**

⚠ WARNING

- **If wires are removed or replaced, make sure wiring and wire harness are properly routed and secured. Failure to properly route and secure wiring could result in vehicle malfunction, property damage, personal injury, or death.**

35. Connect the spark plug wire.
36. Connect battery cables, positive (+) cable first, and tighten hardware to 12 ft-lb (16 N·m). **See Figure 10-1, Section 10, Page 10-3.** Coat terminals with Battery Terminal Protector Spray (CCI P/N 1014305) to minimize corrosion.
37. Adjust the engine RPM setting. **See Engine RPM Adjustment, Section 14, Page 14-11.**

FORWARD/REVERSE SHIFTER CABLE

See General Warning, Section 10, Page 10-1.

If the Forward/Reverse shifter cable is damaged in any way, it must be replaced.

FORWARD/REVERSE SHIFTER CABLE REMOVAL

NOTE: *Before removing cable, note cable routing and positions of wire ties or other devices securing the cable to the vehicle. When installed, cable must be routed and secured as it was originally.*

1. Turn the key switch to the OFF position and remove the key, and place the Forward/Reverse handle in the NEUTRAL position.
2. Disconnect battery cables as instructed. **See WARNING "To avoid unintentionally starting..." in General Warning, Section 10, Page 10-1.**
3. Remove the ball joint socket (2) from the Forward/Reverse shifter assembly ball stud (3) **(Figure 16-53, Page 16-22)**.
4. Remove the ball joint socket (10) from the shifter arm ball stud (11) on the transaxle.
5. Loosen the retaining nuts (5) on both ends of the cable and remove the wire tie. **See following NOTE.**

NOTE: *Turf 6, Carryall 6, Villager 6, Villager 8, and TransPorter vehicles: drill out the rivet that secures the cable clamp (32) to the body.*

6. Remove cable from the vehicle.

FORWARD/REVERSE SHIFTER CABLE INSTALLATION

1. Begin at the Forward/Reverse shifter, and route the cable exactly as it was originally, to the transaxle shifter lever.
2. Secure the cable with a retaining nut (5) on each side of the shifter cable support bracket at the transaxle **(Figure 16-53, Page 16-22)**. Tighten nuts to 22 ft-lb (29.8 N·m).
3. Secure the cable with a retaining nut (5) on each side of the shifter cable support bracket at the Forward/Reverse assembly. Tighten nuts to 43 in-lb (4.9 N·m).
4. Install the ball joint socket (10) on the shifter lever ball stud (11) on the transaxle.

Forward/Reverse Shifter Cable Installation, Continued:

5. Install the ball joint socket (2) on the Forward/Reverse shifter assembly ball stud (3) **(Figure 16-53, Page 16-22)**. **See following NOTE.**

6. Install wire tie (8) to secure wire harness to cable at the support bracket near the Forward/Reverse shifter assembly. **See following WARNING.**

⚠ WARNING

- **If wires are removed or replaced, make sure wiring and wire harness are properly routed and secured. Failure to properly route and secure wiring could result in vehicle malfunction, property damage, personal injury, or death.**

7. Connect battery cables, positive (+) cable first, and tighten hardware to 12 ft-lb (16 N·m). **See Figure 10-1, Section 10, Page 10-3.** Coat terminals with Battery Terminal Protector Spray (CCI P/N 1014305) to minimize corrosion.

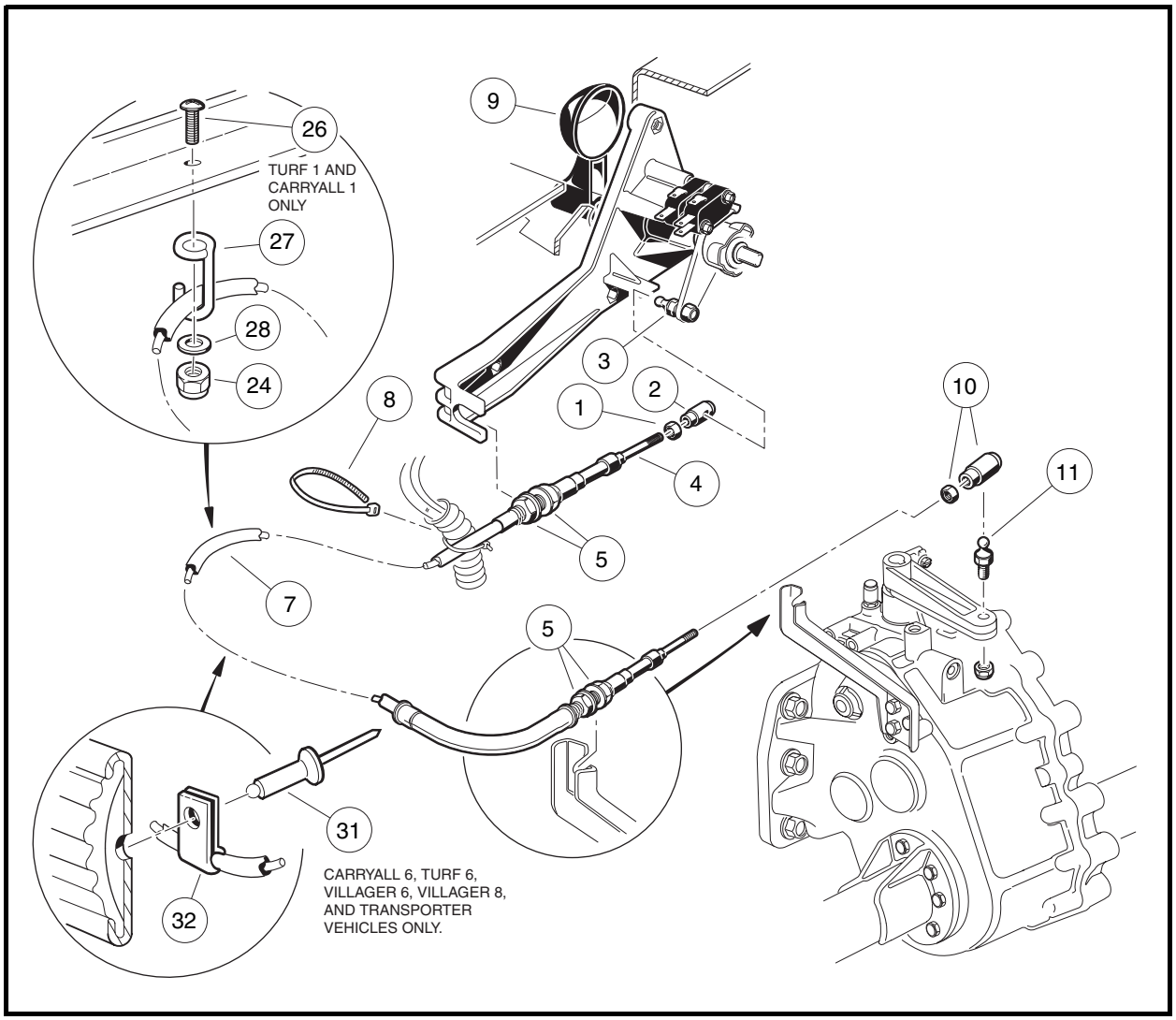

Figure 16-53 Forward/Reverse Shifter Cable

FORWARD/REVERSE SHIFTER CABLE ADJUSTMENT

With the shifter lever of the unitized transaxle in the NEUTRAL position **(Figure 16-54, Page 16-23)**, the Forward/Reverse handle (9) **(Figure 16-53, Page 16-22)** should be straight up. For minor adjustments, the nut (1) may be loosened and the ball joint socket (2) rotated to get the proper adjustment **(Figure 16-53, Page 16-22)**. **See following CAUTION.**

⚠ CAUTION

- **Be sure threads of cable are engaged in ball joint socket at least 1/4 inch (6.35 mm). If ball joint socket comes loose from the cable, the Forward/Reverse shifter will not operate properly.**

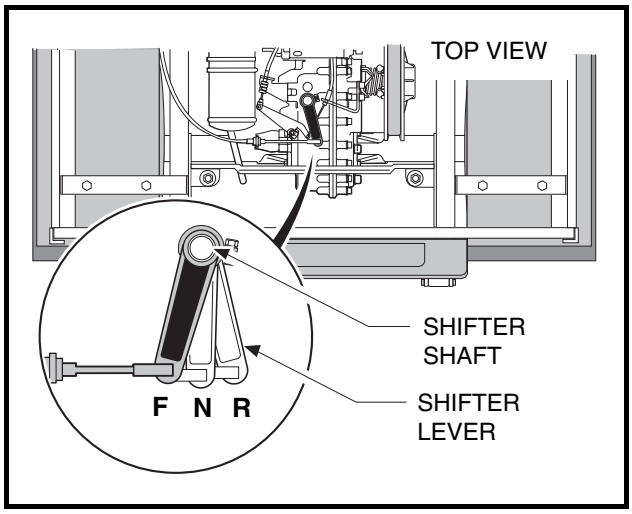

Figure 16-54 Forward/Reverse Shifter Positions

For major adjustments, the cable retaining nuts (5) must be loosened and adjusted. When the cable is properly adjusted, with the Forward/Reverse handle (9) **(Figure 16-53, Page 16-22)** in the NEUTRAL position, the shift lever of the transaxle will also be in the NEUTRAL position **(Figure 16-54, Page 16-23)**. Tighten nuts at the transaxle to 22 ft-lb (29.8 N·m); tighten nuts at the Forward/Reverse assembly to 43 in-lb (4.9 N·m).

SECTION 17 – TORQUE CONVERTER

⚠ DANGER

- **See General Warning, Section 10, Page 10-1.**

⚠ WARNING

- **See General Warning, Section 10, Page 10-1.**

GENERAL INFORMATION

The torque converter consists of a drive clutch, a driven clutch, and a drive belt. The drive clutch, which is mounted to the engine, is in the open position when the engine is at idle. At this point, the belt is riding at a low position (smaller diameter) on the drive clutch. The driven clutch is mounted on the transaxle. It is in the closed position, and the drive belt is riding at a high position (large diameter) on it when the engine is at idle.

At the point of clutch engagement, the speed ratio of the drive clutch to the driven clutch is 3.5 to 1. This ratio provides excellent starting and low-speed torque.

As engine speed increases, centrifugal force on internal weights close the drive clutch, pushing the belt up to a higher position on the clutch (increasing the diameter of the belt loop). As the diameter of the belt loop increases at the drive clutch, the driven clutch is forced open as the diameter of its belt loop decreases. At governed top speed, the ratio of drive clutch to driven clutch is 0.92 to 1.

On steep grades, or when the vehicle is heavily loaded, higher torques are achieved through the use of a torque-sensing ramp device on the driven clutch. This device overcomes the force of the centrifugal weights to close the driven clutch and open the drive clutch, thus increasing axle torque with little or no change in engine RPM.

The engine and torque converter rotate clockwise as viewed from the clutch side of the engine.

To provide optimum performance for the OHV engine and powertrain, the vehicle uses a pair of tuned clutches.

To properly assemble and disassemble the torque converter, the following tools should be used:

- Torque Converter Tool Kit (CCI P/N 1014510) **(Figure 17-1, Page 17-2)**.
- Scribe or small pick (not included in torque converter tool kit).

TROUBLESHOOTING

See General Warning, Section 10, Page 10-1.

Maintaining proper adjustment of the engine and governor, as well as the torque converter, is essential to the troubleshooting process. If these adjustments are within Club Car specifications and, when climbing a steep hill, the engine begins to lose RPM before the drive belt reaches the top of the driven clutch, there is a torque converter problem.

If the torque converter is not operating properly:

1. Check the governor and throttle settings. **See Governor Cable Installation and Adjustment, Section 14, Page 14-8.**

Troubleshooting, Continued:

2. Inspect the driven clutch for dirt and dust buildup on its component parts. Clean the driven clutch with water to remove any dust or dirt, then drive the vehicle and check for proper operation.
3. If cleaning the driven clutch does not solve the problem, disassemble and thoroughly clean all parts of the drive clutch. Be sure to clean the plastic drive buttons (10) **(Figure 17-5, Page 17-6)**.

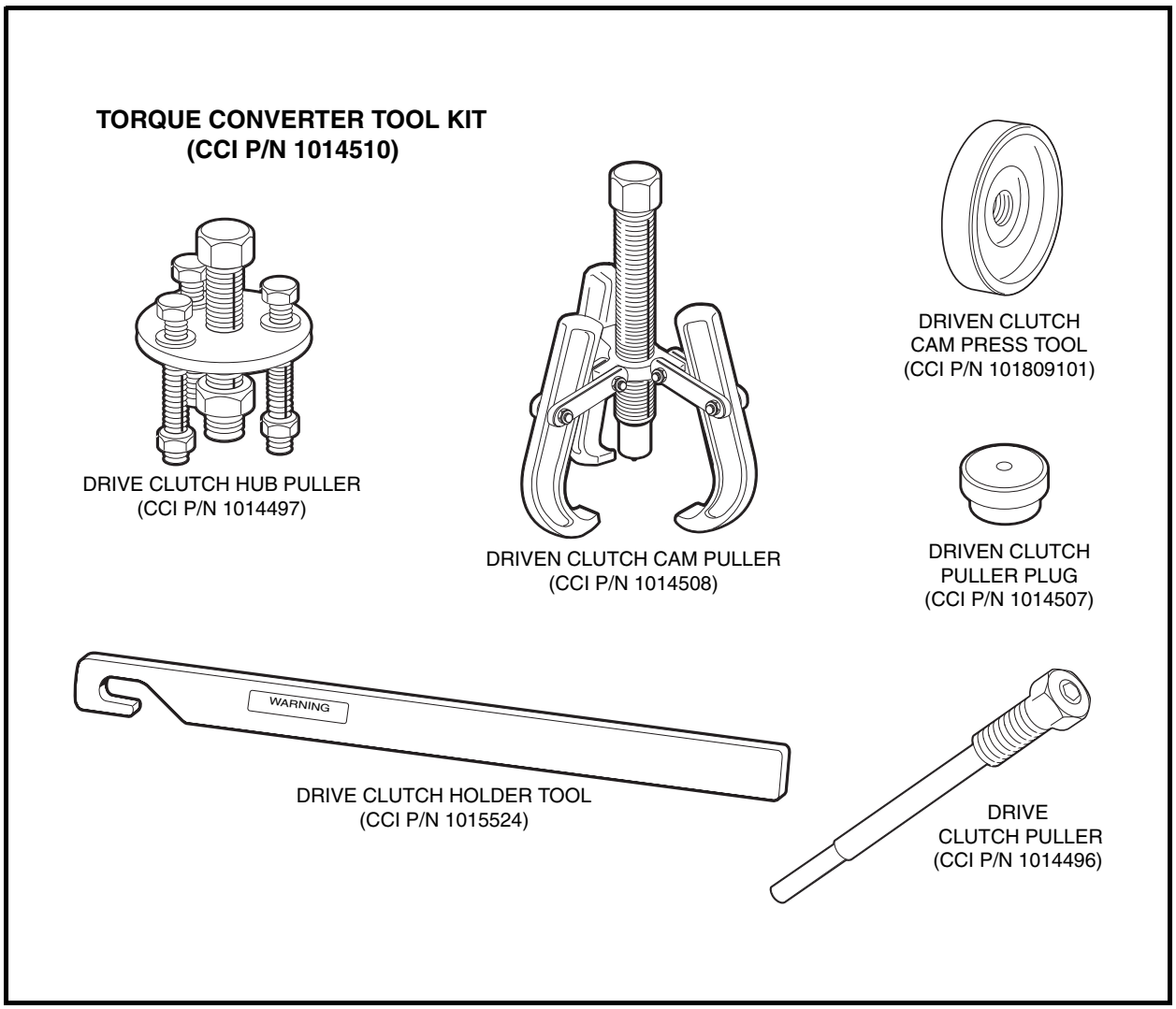

Figure 17-1 Torque Converter Tool Kit

DRIVE BELT

See General Warning, Section 10, Page 10-1.

The drive belt should be inspected semiannually for wear and (or) glazing. If it is excessively worn, frayed, or glazed, replace the belt.

As the drive belt wears, the engine RPM will increase to compensate for the change in torque converter ratio. This will keep the vehicle's maximum ground speed correct. **See Section 2 – Vehicle Specifications in the appropriate maintenance and service manual.**

DRIVE BELT REMOVAL

1. Disconnect the battery cables as instructed. **See WARNING "To avoid unintentionally starting..." in General Warning, Section 10, Page 10-1.**
2. Disconnect the spark plug wire from the spark plug. **See WARNING "To avoid unintentionally starting..." in General Warning, Section 10, Page 10-1.**

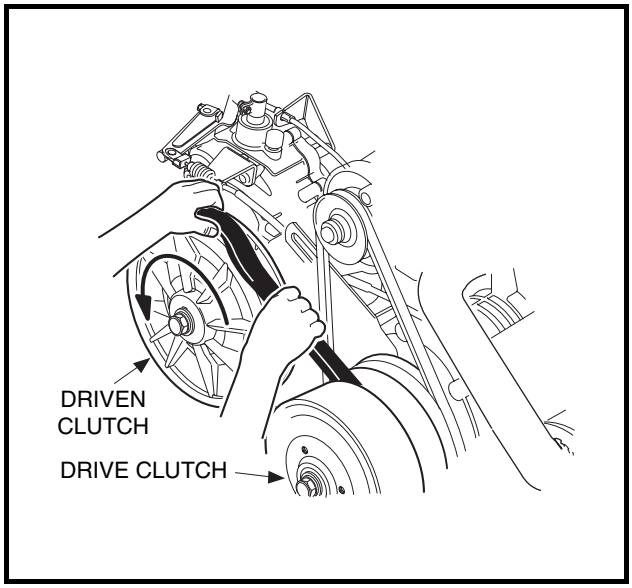

Figure 17-2 Drive Belt Removal

3. Grasp the belt midway between the drive and driven clutches. Lift upward on the belt to force the sheaves of the DRIVEN clutch apart, then roll the belt off the DRIVEN clutch by rotating the clutch counterclockwise **(Figure 17-2, Page 17-3)**. **See following CAUTION.**

⚠ CAUTION

- **Make sure fingers are not underneath the belt when rolling the belt off the driven clutch.**

4. Remove the belt from the drive clutch.

DRIVE BELT INSTALLATION

1. Position the new belt on the drive clutch, then start the belt over the top of the driven clutch.
2. With the belt started onto the driven clutch, rotate the driven clutch counterclockwise and roll the belt over the driven clutch sheaves and onto the clutch.
3. Connect battery cables, positive (+) cable first, and tighten hardware to 12 ft-lb (16 N·m). **See Figure 10-1, Section 10, Page 10-3.** Coat terminals with Battery Terminal Protector Spray (CCI P/N 1014305) to minimize corrosion.
4. Connect the spark plug wire to the plug.

DRIVE CLUTCH

See General Warning, Section 10, Page 10-1.

⚠ CAUTION

- **Be very careful when handling the clutches. A clutch that has been dropped will not be properly balanced. If either clutch is dropped, assume that it is damaged and replace it.**

DRIVE CLUTCH REMOVAL

1. Remove the drive belt as instructed. **See Drive Belt Removal on page 17-3.**
2. Loosen the starter/generator mounting and adjusting hardware and then remove the starter belt. **See WARNING "Moving parts! Do not..." in General Warning, Section 10, Page 10-2.**

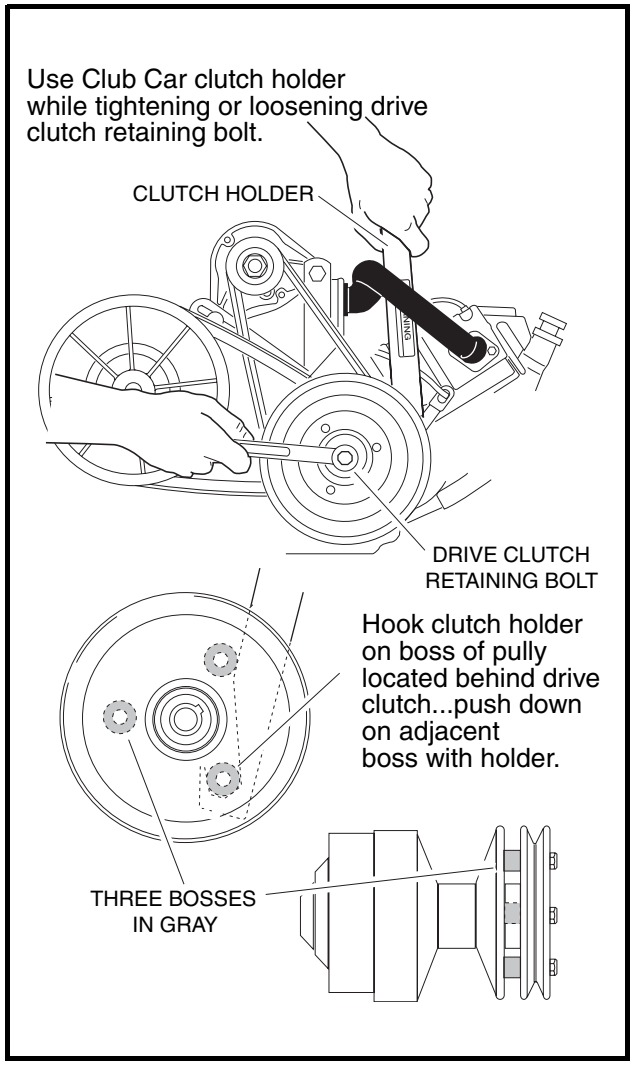

Figure 17-3 Loosen Retaining Bolt

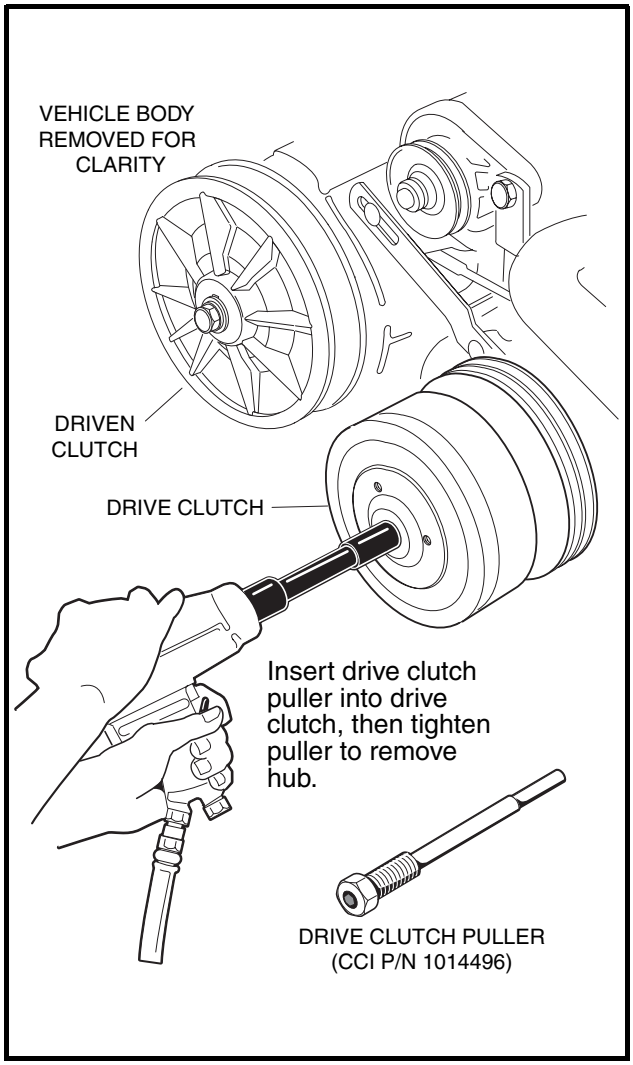

Figure 17-4 Drive Clutch Removal

3. Place chocks at the front wheels and lift the rear of the vehicle with a chain hoist or floor jack. Place jack stands under the vehicle frame at the front spring mounts. This will allow the centerline of the drive clutch to drop below the frame I-beam for access to the bolt securing the drive clutch. **See following WARNING.**

⚠ WARNING

- **Lift only one end of the vehicle at a time. Use a suitable lifting device (chain hoist or hydraulic floor jack) with 1000 lb. (454 kg) minimum lifting capacity. Do not use lifting device to hold vehicle in raised position. Use approved jack stands of proper weight capacity to support the vehicle and chock the wheels that remain on the floor. When not performing a test or service procedure that requires movement of the wheels, lock the brakes.**

4. Remove the drive clutch retaining bolt (17) and mounting washers (19) **(Figure 17-5, Page 17-6)**. **See also Figure 17-3, Page 17-4. See following NOTE.**

NOTE: *The drive clutch mounting bolt has left-hand threads.*

The crankshaft has left-hand threads at the clutch mounting hole.

5. Lubricate the threaded portion of the clutch puller tool with a light oil and thread the clutch puller tool into the clutch retaining bolt hole.
6. Use a 1/2-inch drive air wrench to tighten the clutch puller tool. The drive clutch will come free of the crankshaft **(Figure 17-4, Page 17-4)**.
7. Support the drive clutch assembly in your hand and back the clutch puller tool out of the crankshaft.

⚠ CAUTION

- **Do not hit or tap the clutch with a hammer. Do not pry the clutch. These actions will damage the clutch.**

DRIVE CLUTCH CLEANING AND INSPECTION

1. Use a dry, lint-free cloth to clean clutch parts.

⚠ CAUTION

- **Do not lubricate the drive clutch. Lubricants attract dirt and dust, which interfere with proper clutch operation.**
- **Use only a dry cloth to lightly wipe the shaft of the fixed face assembly (7) (Figure 17-5, Page 17-6). Do not use a brush or steel wool. These will damage the surface of the shaft.**
- **Do not use solvents. Solvents will damage the lubricating characteristics of the bushings.**

2. Inspect the belt contact surfaces of the clutch sheaves for wear. If any area of a sheave contact surface has wear of 0.060 inch (1.52 mm) or more, the clutch should be replaced.

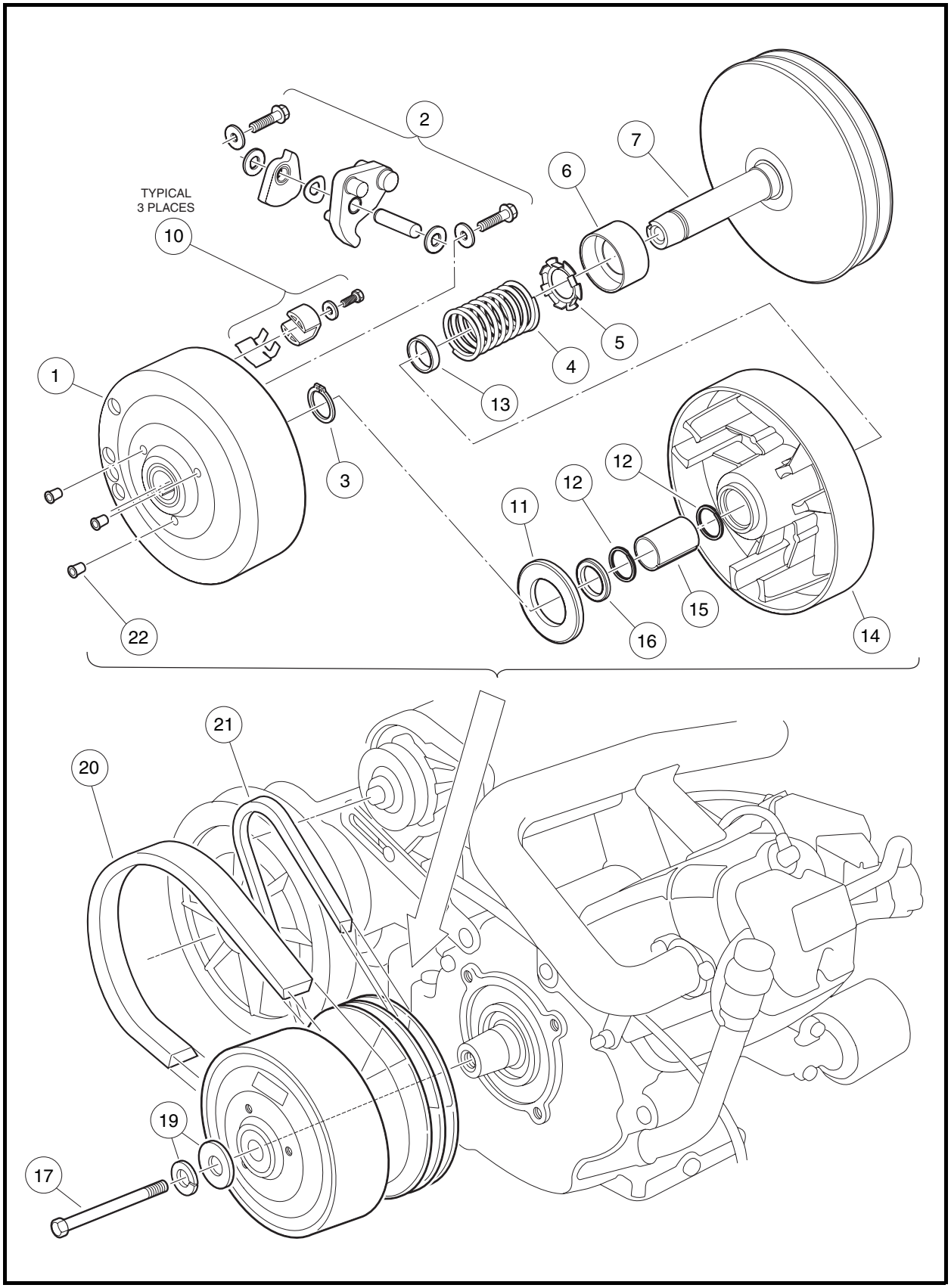

Figure 17-5 Drive Clutch Assembly

DRIVE CLUTCH DISASSEMBLY

⚠ CAUTION

- **The drive clutch is balanced as an assembly. Before disassembly, make match marks on the drive clutch hub and on the moveable face assembly so they can be reassembled in the same positions (Figure 17-6, Page 17-7).**

1. Make match marks on the drive clutch hub and on the moveable face casting **(Figure 17-6, Page 17-7)**.
2. Remove the drive clutch hub (1) **(Figure 17-5, Page 17-6)**:
   2.1. Remove the three plugs (22) from the clutch puller attachment holes **(Figure 17-5, Page 17-6)**.
   2.2. Thread the center bolt of the Drive Clutch Hub Puller (CCI P/N 1014497) into clutch until the stop nut touches the clutch, then back the bolt out one-half turn **(Figure 17-7, Page 17-7)**.
   2.3. Thread the three small bolts of the puller into corresponding holes in the clutch. Tighten bolts evenly, making sure the face of the puller plate is parallel to the face of the clutch **(Figure 17-7, Page 17-7)**.
   2.4. Unscrew the puller center bolt out of the clutch to pull drive clutch hub off.

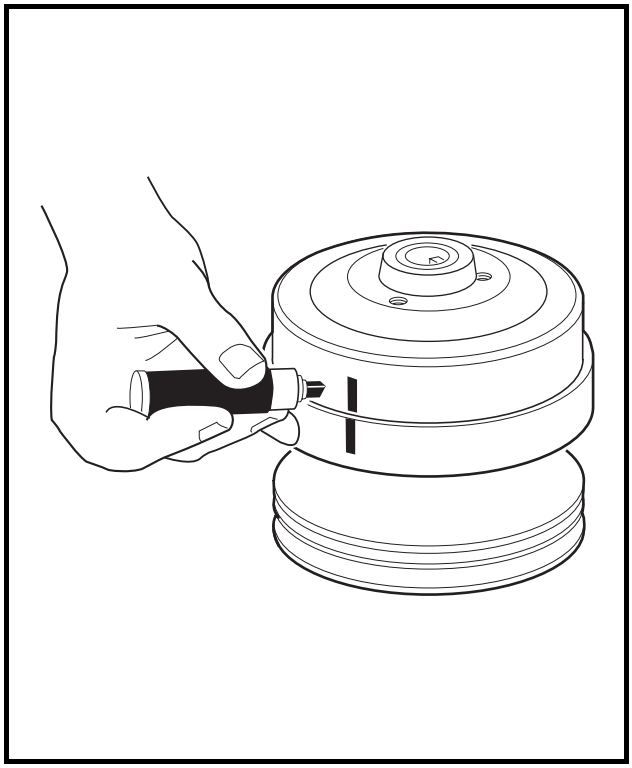

Figure 17-6 Mark Drive Clutch Hub

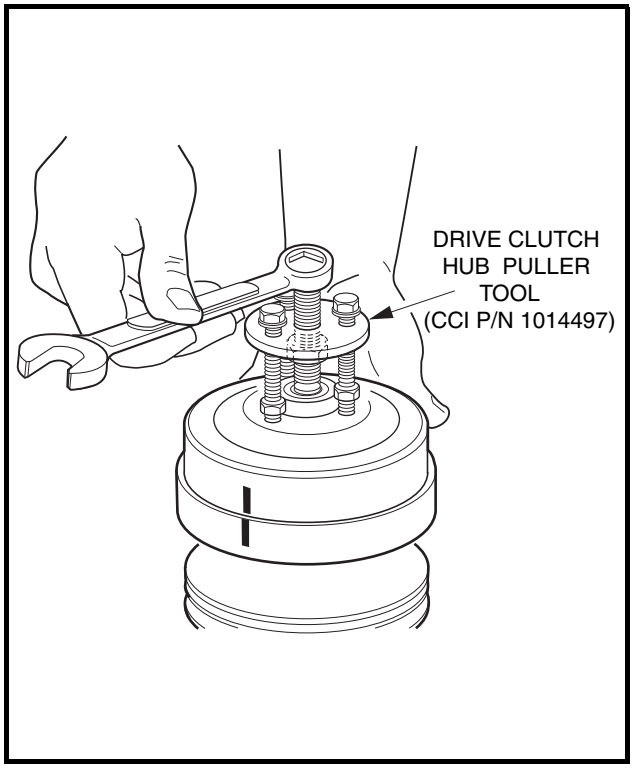

Figure 17-7 Remove Drive Clutch Hub

3. Remove the thrust washer (11) from the moveable face (14) **(Figure 17-5, Page 17-6)**.
4. Remove the drive buttons **(Figure 17-8, Page 17-8)**.
   4.1. Remove the screws, flat washers, drive button take-up springs, and drive buttons as shown **(Figure 17-8, Page 17-8)**.

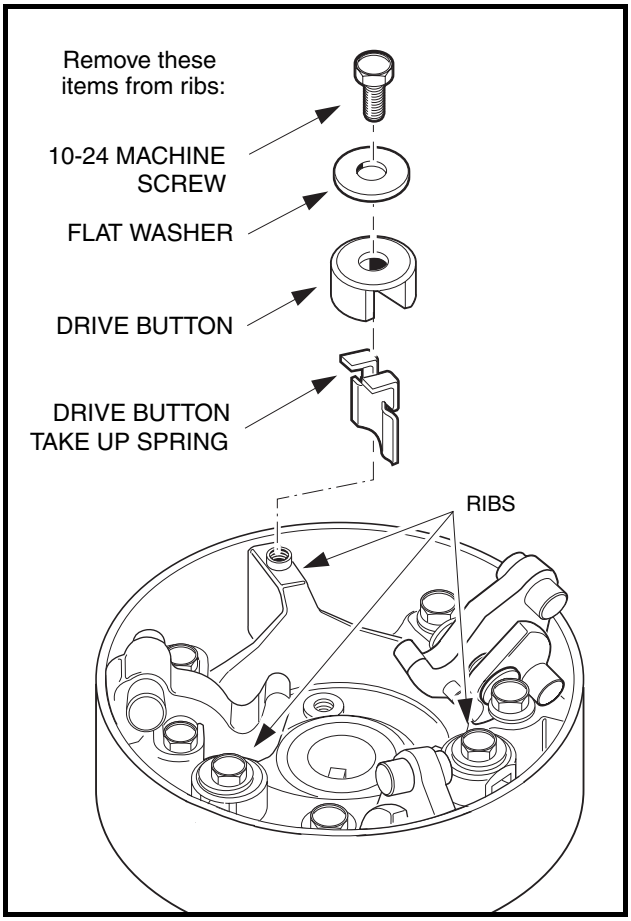

Figure 17-8 Drive Button Mounting

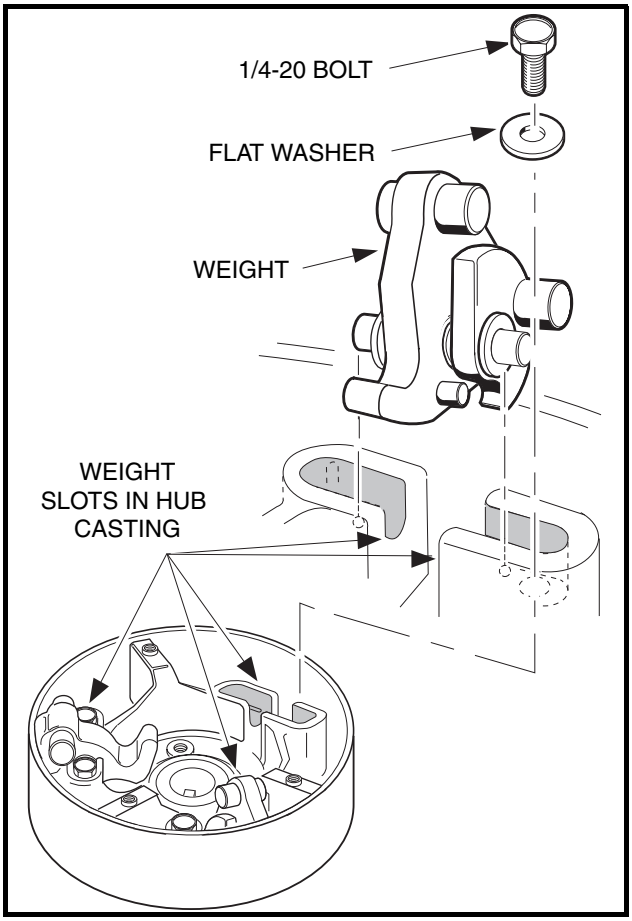

Figure 17-9 Weight Position

5. Remove the clutch weights **(Figure 17-9, Page 17-8)**:

   5.1. Remove the screws and flat washers attaching the weights as shown **(Figure 17-9, Page 17-8)**.

   5.2. Pull the weight assemblies, with pins, from the clutch.

   5.3. Before removing, note the orientations of the wave washer and of the primary and secondary weights to one another **(Figures 17-10 and 17-11, Page 17-8)**. Remove the plastic washers, weights and wave washer from the pin. Retain all parts.

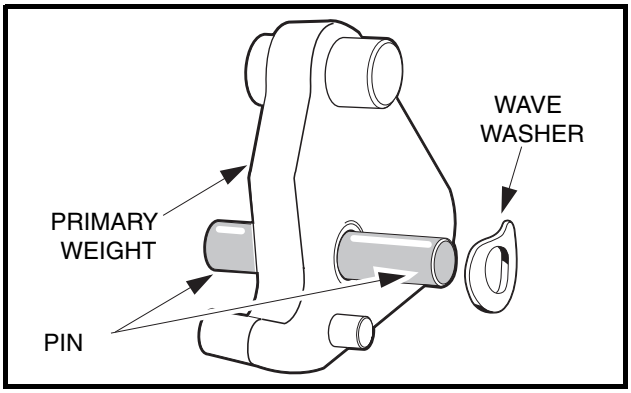

Figure 17-10 Install Pin and Washer

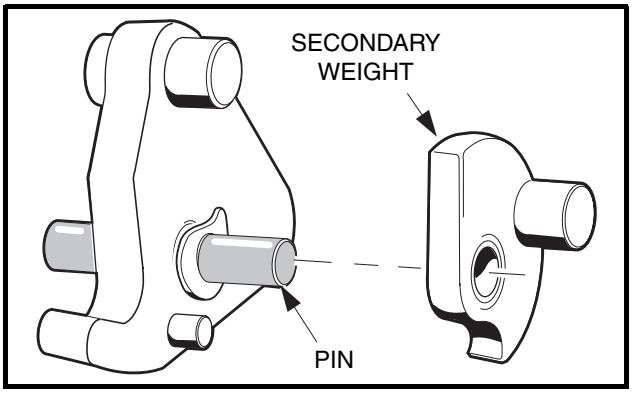

Figure 17-11 Install Secondary Weight

6. Remove the retaining ring (3) from the shaft of the fixed face assembly (7) and slide the moveable face (14) off the shaft **(Figure 17-5, Page 17-6)**. **See following NOTE.**

NOTE: *If the moveable face is removed from the hub of the fixed face, the spiral back-up rings (12) must be replaced with new ones* ***(Figure 17-5, Page 17-6)****.*

7. Remove the spacer (16), and spring (4) and retainer (5). The spring retainer can be removed from the spring if necessary **(Figure 17-5, Page 17-6)**.
8. If necessary, remove idler bearing. Use a press to remove the bearing **(Figure 17-12, Page 17-9)**. **See following NOTE.**

NOTE: *Do not remove the idler bearing unless it needs to be replaced. If idler bearing is removed, replace it with a new bearing.*

9. Use a scribe or small pick to remove the spiral backup rings (12) from each end of the bore in the fixed face assembly **(Figure 17-5, Page 17-6)**. **See also Figure 17-13, Page 17-9.** Discard the rings.

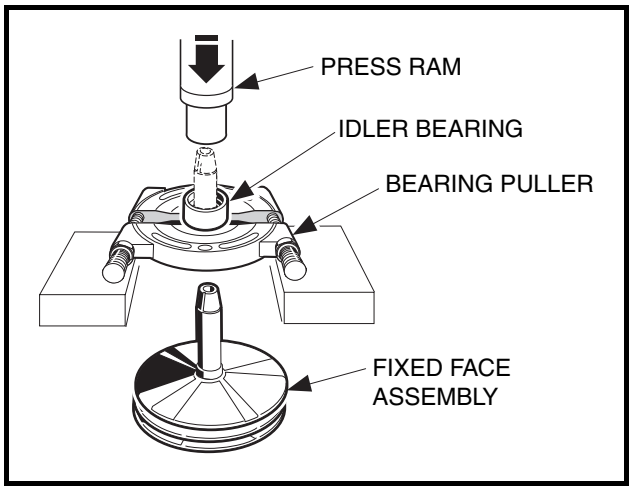

Figure 17-12 Remove Idler Bearing

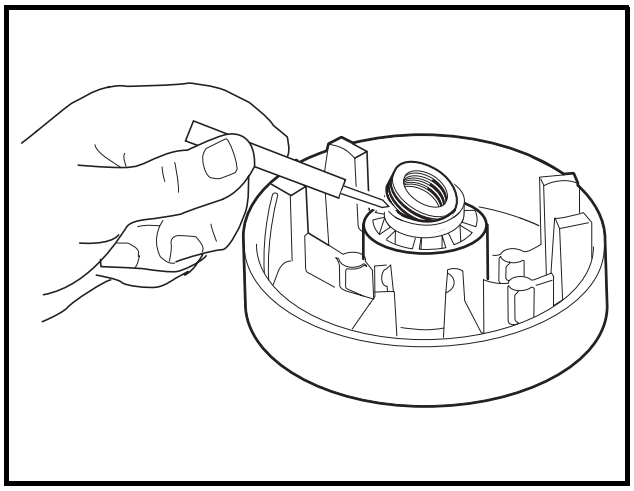

Figure 17-13 Spiral Back-up Rings

INSPECTION OF DRIVE CLUTCH PARTS

1. Inspect the idler bearing (6) for smooth rotation or seal damage **(Figure 17-5, Page 17-6)**. **See following NOTE.**

NOTE: *It is normal for a small amount of grease to be present at the edge of seal.*

2. Inspect the bore of the moveable face assembly (14) for scarring or wear. The moveable face assembly must be replaced if the bore is worn to a diameter of 0.883 inch (22.4 mm) or larger **(Figure 17-5, Page 17-6)**.
3. Inspect the steel shaft (7) on the fixed face assembly. There should be no measurable wear anywhere on the shaft. Replace the shaft if it is worn, scratched, or damaged.
4. Inspect the thrust washer (11) for wear. If it is worn more than 0.030 inch (0.76 mm), turn it over or replace it with a new one.
5. Inspect the primary weights (2) and the hub casting for wear. If the primary weights show signs they are touching the casting, the tips of the weights have worn beyond specification and they must be replaced.

Inspection of Drive Clutch Parts, Continued:

6. Inspect the pins on the primary weights (2). There should be no measurable wear. Replace them if they are worn, scratched, or damaged.
7. Inspect the drive belt pulley sheaves for excessive wear or damage. If the sheaves are excessively worn or damaged, replace the entire fixed face drive assembly.

DRIVE CLUTCH ASSEMBLY

1. Press idler bearing (6) onto the shaft of the fixed face assembly (7). Press on the inner race of the bearing only. Make sure that the cup side of bearing is facing away from the fixed face **(Figure 17-5, Page 17-6)**.
2. Using needle nose pliers, install the spring retainer (5) onto the spring (4).
3. Install the spring (4) and retainer (5) into the cup of the idler bearing (6).
4. Install the spacer (13) onto the shaft of the fixed face.
5. Install a new spiral backup ring (12) in each end of the bore of the moveable face assembly (14).
6. Install the moveable face assembly (14) onto the shaft of the fixed face assembly (7).

⚠ CAUTION

- **To avoid damaging the spiral back-up rings, be very careful when installing the moveable face.**

6.1. Rotate the moveable face assembly clockwise while installing it onto the shaft.
6.2. Install the retaining ring (3) **(Figure 17-5, Page 17-6)**.

7. Install the primary weights on the mounting pins **(Figure 17-10, Page 17-8)**.
8. Install a wave washer on each mounting pin. Make sure that the concave side of the washer faces the side of the primary weight with the small guide pin protruding from it **(Figure 17-10, Page 17-8)**.
9. Install the secondary weights onto the mounting pins with the weight pins on the secondary weights pointing away from the primary weights. The wave washers should be between the primary and secondary weights **(Figure 17-11, Page 17-8)**.
10. Install white plastic flat washers on each end of the mounting pin and push them against the outside surfaces of the weights. Center the weights and washers on the mounting pin **(Figure 17-14, Page 17-10)**.
11. Install the weight assemblies into the slots in the hub casting **(Figure 17-9, Page 17-8)**. Make sure the mounting pin protrudes an equal amount on each side of the weights when the assemblies are in position **(Figure 17-14, Page 17-10)**.

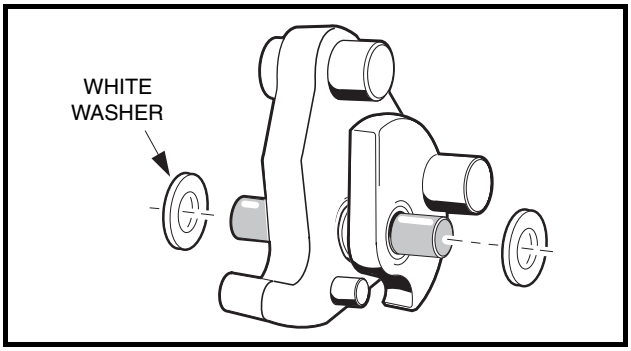

Figure 17-14 Install White Washers

12. Install the 1/4-20 bolts and washers (2) and tighten them to 10 ft-lb (13 N·m) **(Figure 17-5, Page 17-6)**. **See following NOTE.**

NOTE: *Make sure there is at least a (minimum) gap of 0.020 inch (0.51 mm) between each end of the mounting pin and the mounting bolt.*

13. Install three drive button take-up springs.
    13.1. Install each spring on right-hand side of the three button mounting posts (when looking into the interior of the clutch drive hub, and with the rib at a twelve o'clock position) as shown **(Figure 17-15, Page 17-11)**.
14. Compress each take-up spring and install the drive button over the rib and take-up spring **(Figure 17-8, Page 17-8)**.
15. Install a no. 10-24 button retaining screw with flat washer through each button and into the rib. Tighten the screws to 34 in-lb (3.8 N·m) **(Figure 17-9, Page 17-8)**.
16. Install the thrust washer (11) onto the moveable face assembly **(Figure 17-5, Page 17-6)**.
17. Install the hub assembly (8) on the moveable face assembly and align the match marks made before disassembling the clutch. Press the hub assembly on by hand.
18. Replace the three plastic plugs (22) into the hole protectors **(Figure 17-5, Page 17-6)**.

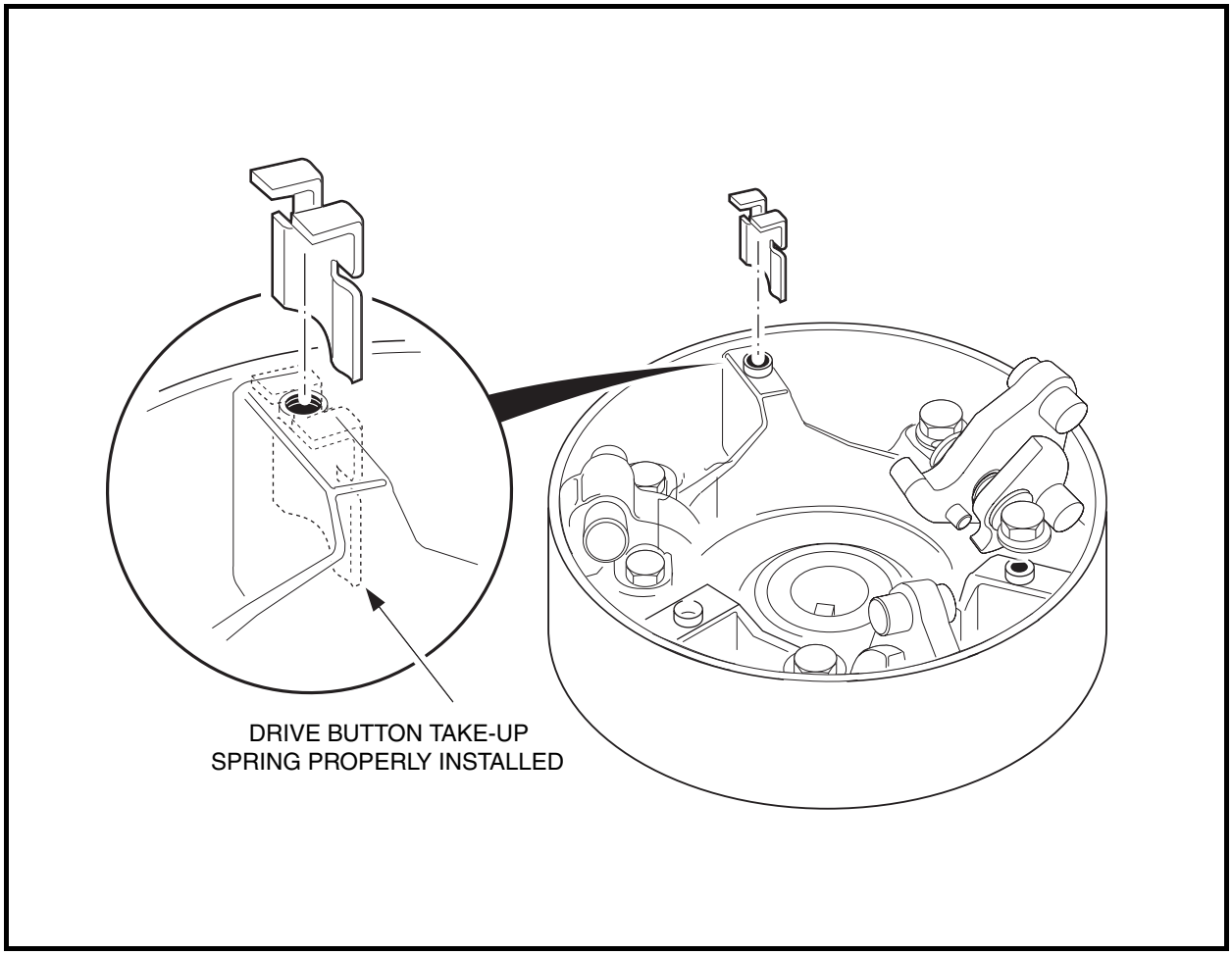

Figure 17-15 Correct Orientation of Drive Button Take-up Springs

DRIVE CLUTCH INSTALLATION

1. Place the drive clutch assembly on the crankshaft taper. Position the mounting washer (with the green side facing out) on the bolt (17) and start the bolt into the crankshaft **(Figure 17-5, Page 17-6)**. **See following NOTE.**

NOTE: *The drive clutch mounting bolt has left-hand threads.*

2. Tighten the drive clutch retaining bolt (17) to 25 ft-lb (33.9 N·m) **(Figure 17-5, Page 17-6)**.
3. Install the starter/generator belt and adjust belt tension as instructed. **See Belt Tension Adjustment, Section 12, Page 12-11.** Tighten the starter/generator mounting hardware to 23 ft-lb (31.2 N·m) and the adjusting hardware to 13 ft-lb (17.6 N·m).
4. Install the drive belt as instructed. **See Drive Belt Installation on page 17-3.**
5. Connect battery cables, positive (+) cable first, and tighten hardware to 12 ft-lb (16 N·m). **See Figure 10-1, Section 10, Page 10-3.** Coat terminals with Battery Terminal Protector Spray (CCI P/N 1014305) to minimize corrosion.
6. Connect the spark plug wire to the spark plug.
7. Drive the vehicle and check for proper operation.

DRIVEN CLUTCH

See General Warning, Section 10, Page 10-1.

DRIVEN CLUTCH REMOVAL

1. Remove the drive belt as instructed. **See Drive Belt Removal on page 17-3.**
2. Remove the bolt (11) and mounting washer (12) from the clutch shaft **(Figure 17-18, Page 17-14)**.
3. Grasp the driven clutch assembly and slide it off the shaft.
4. Leave the key (9) in the keyway.

DRIVEN CLUTCH DISASSEMBLY

1. Using external snap ring pliers, remove the retaining ring (4) **(Figure 17-16, Page 17-13)**. **See following WARNING.**

⚠ WARNING

- **Do not place fingers under the cam when removing the cam. The moveable face may spin when the cam buttons release from the cam ramps, resulting in severe personal injury.**

2. Insert a puller plug (CCI P/N 1014507) **(Figure 17-17, Page 17-13)** into the shaft bore and use a driven clutch cam puller (CCI P/N 1014508) to remove the cam (4) from the fixed face shaft (8) **(Figure 17-18, Page 17-14)**.
3. Remove the spring (5) **(Figure 17-18, Page 17-14)**.
4. Retain the key (3).
5. Slide the moveable face (7) off the fixed face shaft (8).

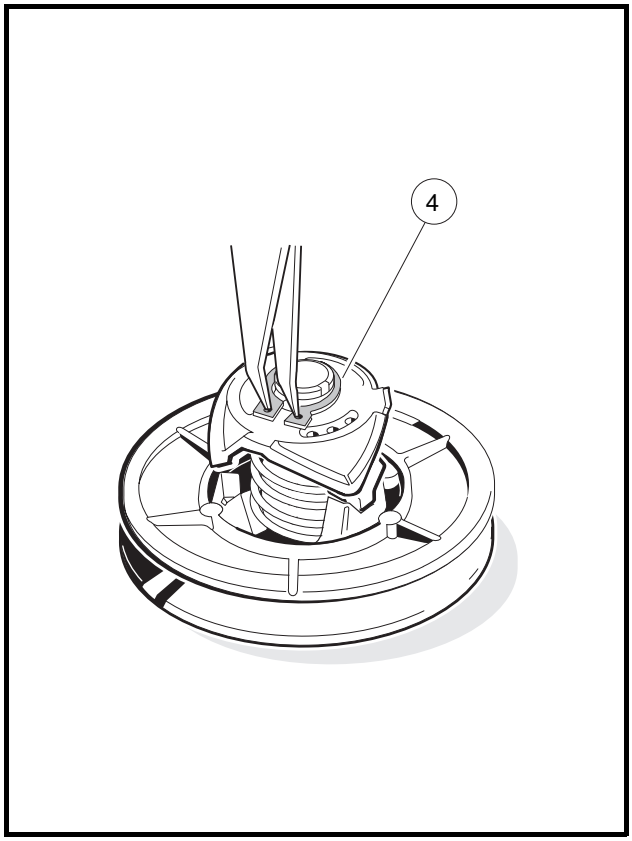

Figure 17-16 Remove Retaining Ring

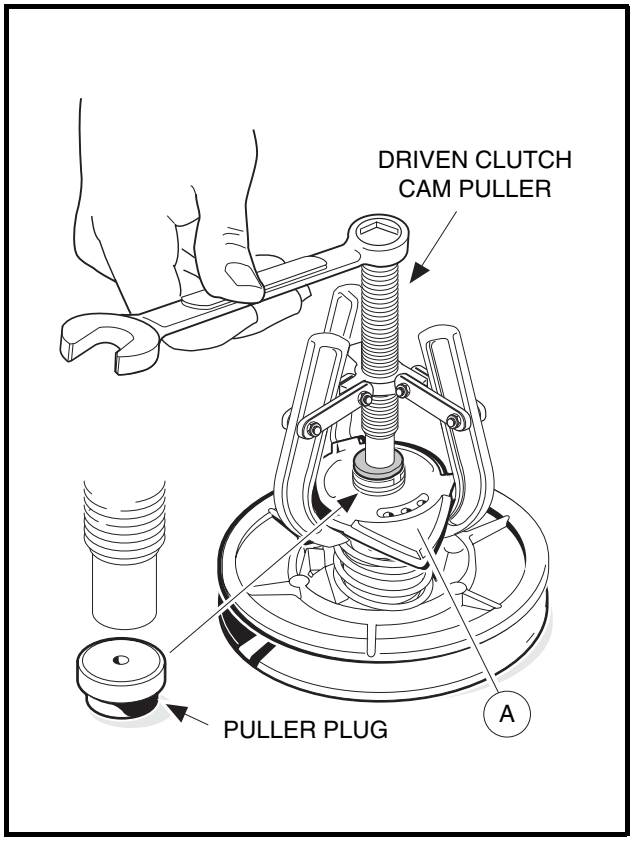

Figure 17-17 Driven Clutch Disassembly

DRIVEN CLUTCH INSPECTION

1. Inspect the cam (4) for excessive wear. Replace it if necessary **(Figure 17-18, Page 17-14)**.
2. Inspect the drive buttons (6) for excessive wear. Replace if necessary. To remove the drive buttons, remove the socket-head cap screws and then the buttons.
3. Inspect the smooth surface on the fixed and moveable face assemblies. Assemblies must be replaced if surfaces are worn more than 0.060 inch (1.5 mm).
4. Inspect the bronze bearing in the moveable face. If the bearing bore diameter is more than 1.384 inch (35.15 mm), the entire moveable face assembly must be replaced.
5. Inspect the shaft of the fixed face assembly. There should be no noticeable wear. Replace the shaft if it is worn, scratched or damaged.

DRIVEN CLUTCH ASSEMBLY

1. Place the three drive buttons (6) in position. Apply one drop of Loctite® 222 to each of the socket-head cap screws and then install and tighten them to 8 in-lb (0.9 N·m) **(Figure 17-18, Page 17-14)**.
2. Slide the moveable face assembly (7) onto the fixed face shaft (8).
3. Place the end of the spring (5) into the hole in the moveable face assembly.
4. Install the key (3) into the keyway of the fixed face assembly (8) shaft.

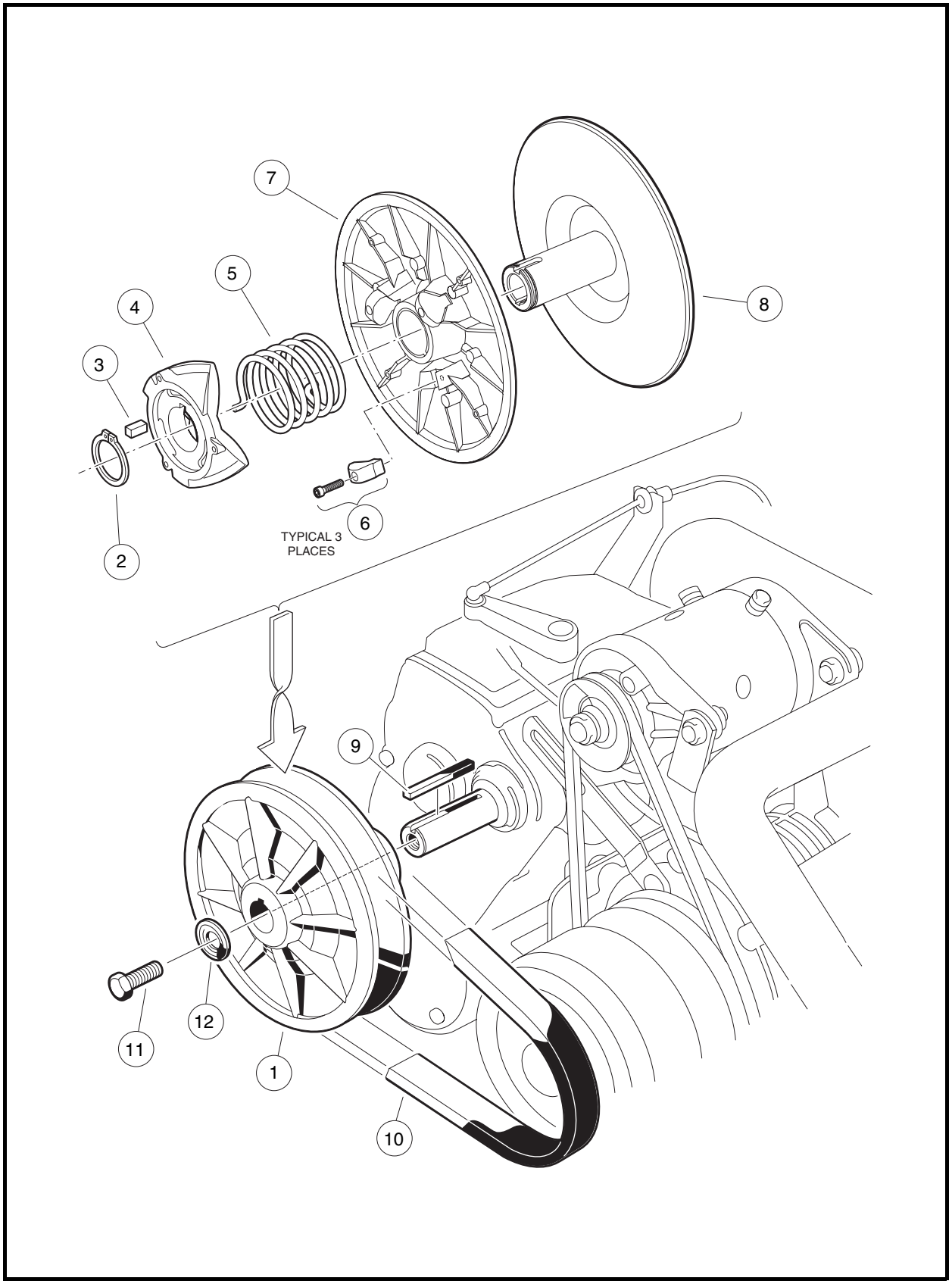

Figure 17-18 Driven Clutch Assembly

Driven Clutch Assembly, Continued:

5. Holding the cam (4) in position for assembly on the shaft, install the other end of the spring (5) into the center spring hole of the cam. Rotate the cam until the keyway is aligned with the key (3) on the fixed face assembly, and then start the cam onto the shaft approximately 1/4 to 3/8 inch (6.3 to 9.5 mm).

5.1. **Press Assembly Process:**

5.1.1. Place the clutch assembly in a press and position the cam press tool (CCI P/N 101809101) on the cam as shown **(Figure 17-19, Page 17-15).**

5.1.2. Hold the fixed face assembly (3) and rotate the moveable face assembly (1) one-third turn **clockwise**, then press the cam (2) onto the fixed face assembly **(Figure 17-19, Page 17-15)**.

5.1.3. Install the retaining ring (2) **(Figure 17-18, Page 17-14)**. **See following NOTE**.

NOTE: *The retaining ring can be reused if the O.D. does not exceed 1.607 inches (40.82 mm); otherwise, it must be replaced with a new ring (CCI P/N 1014080).*

5.1.4. While holding onto the cam, tap the end of the fixed face shaft lightly with a plastic mallet until the cam seats against the retaining ring. **See following CAUTION.**

⚠ CAUTION

- **Do not use a metal hammer to tap the fixed face hub. A metal hammer will damage the shaft.**

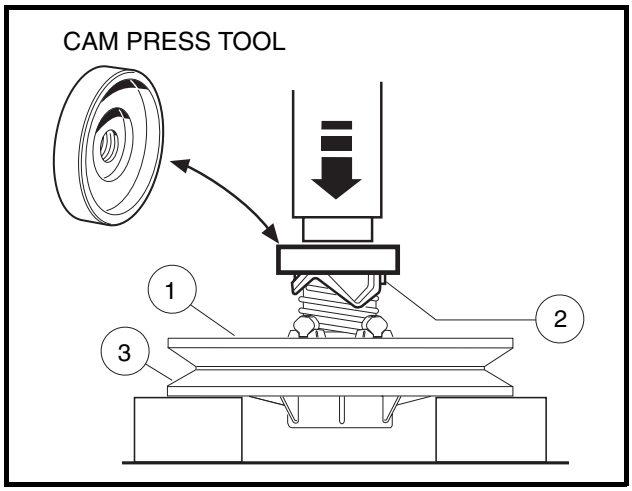

Figure 17-19 Cam Press Tool

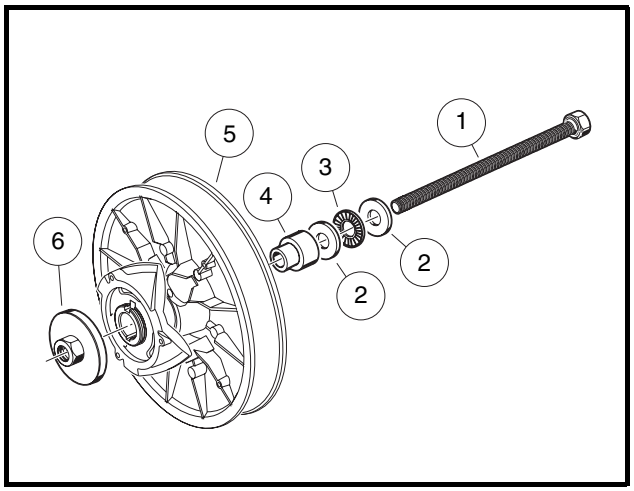

Figure 17-20 Cam Installation Tool

5.2. **Field Assembly Process:**

NOTE: *This process is for field assembly requirements where hydraulic and pneumatic press equipment is not available. Use the cam installation tool (CCI P/N 101808401) for this process.*

5.2.1. With the clutch loosely assembled, set the edge of the clutch body (5) on a clean, flat surface **(Figure 17-20, Page 17-15)**.

5.2.2. Assemble the threaded bolt (1) through the washer (2), the thrust bearing assembly (3), the second washer (2), and the hub guide (4).

NOTE: *It is very important that the bolt, washers, and thrust bearing assembly be assembled in the order described and shown.*

Driven Clutch Assembly, Continued:

5.2.3. Slide the bolt (1) through the clutch body (5) until the threaded bolt, washers, bearing, and hub guide are against the fixed face hub **(Figure 17-20, Page 17-15)**.

5.2.4. Hold the clutch assembly and cam installation tool together and place the fixed face down on spaced blocks **(Figure 17-19, Page 17-15)**.

5.2.5. Place the cam press hub (6) onto the cam installation bolt and thread it down onto the cam hub, centering the press hub onto the cam hub.

5.2.6. Hold the fixed face assembly of the clutch (5) and rotate the moveable face of the clutch one-third turn clockwise.

5.2.7. Use two wrenches, and hold the bolt head while tightening the cam press hub (6) pressing the cam onto the keyed shaft. Advance the press hub until it is firm against the shaft end.

5.2.8. Remove the cam press hub (6) and installation tool, and install the retaining ring.

NOTE: *The retaining ring can be reused if the O.D. does not exceed 1.607 inches (40.82 mm); otherwise, it must be replaced with a new ring (CCI P/N 1014080).*

DRIVEN CLUTCH INSTALLATION

1. To install the driven clutch, reverse the removal procedure. Make sure that the washer (12) is mounted with the flat portion of the washer against the driven clutch **(Figure 17-18, Page 17-14)**. Secure with a new bolt (11). **See following NOTE.**

NOTE: *The bolt (11) must be replaced with a new bolt (CCI P/N 102242101) containing a locking patch that will prevent the bolt from loosening.*

2. Tighten the bolt (11) to 18 ft-lb (24.4 N·m).
3. Connect the spark plug wire to the spark plug.
4. Connect battery cables, positive (+) cable first, and tighten hardware to 12 ft-lb (16 N·m). **See Figure 10-1, Section 10, Page 10-3.** Coat terminals with Battery Terminal Protector Spray (CCI P/N 1014305) to minimize corrosion.

A

accelerator
cable
installation 14-10
removal 14-9
pedal limit switch
testing 11-20
rod
installation and adjustment 14-6
removal 14-6
air box
installation 14-15
removal 14-15
air filter 14-17
replacement 14-17
armature
see starter/generator
axle
bearing
installation 16-6
removal 16-4
shaft
installation 16-6
oil seal 16-3
removal 16-3

B

battery 12-37
charging 12-40, 12-41
hydrometer test 11-15
installation 12-40
maintenance 12-38
mineral content 12-39
removal 12-40
self-discharge 12-38
storage 12-41
testing 11-15, 11-42
testing under load 11-17, 11-37
vibration damage 12-39
voltage test 11-17
water level 12-38
belt, drive
see drive belt
brake light relay
installation 12-33
removal 12-33
testing 11-44
brake pedal limit switch
installation 12-35
removal 12-35
testing 11-51
breather valve (reed valve) 13-3

C

carburetor 14-1
closed throttle or idle adjustment 14-10
jet, main 14-2
elevation/size chart 14-2
choke and air intake system 14-12
choke cable
installation 14-12
removal 14-12
clutch (torque converter) troubleshooting 17-1
clutch, drive
see drive clutch
clutch, driven
see driven clutch
commutator
see starter/generator
crankcase cover
installation 13-6
removal 13-4
cylinder head 13-3

D

diagram, wiring 11-6
differential
see unitized transaxle
drive belt
inspection 17-2
installation 17-3
removal 17-3
drive clutch 17-1
assembly 17-10
cleaning and inspection 17-5, 17-9
disassembly 17-7
installation 17-12
removal 17-4
drive unit
see unitized transaxle
driven clutch 17-1
assembly 17-13
disassembly 17-12
inspection 17-13
installation 17-16
removal 17-12

E

electrical system 11-13
engine ignition circuit
see also ignition coil *and* ignition testing
engine
assembly 13-9

removal 13-4
rotation 13-1
RPM adjustment 14-11
engine oil 10-6

F

flywheel
installation 13-8
removal 13-7
forward/reverse cable
adjustment 16-23
installation 16-21
removal 16-21
forward/reverse handle 16-1
fuel filter 14-18
installation 14-18
removal 14-18
fuel gauge/hour meter 12-22
fuel gauge circuit testing 11-39
fuel level sending unit 12-24
fuel level sending unit testing 11-38
hour meter circuit testing 11-40
installation 12-23
removal 12-23
fuel level sending unit 12-24
fuel level sending unit testing 11-38
fuel lines 14-26
fuel pump 14-20
assembly 14-22
cleaning and inspection 14-21
disassembly 14-21
installation 14-22
removal 14-20
fuel shut-off valve 14-27
fuel tank 14-23
disposal 14-24
installation 14-25
removal 14-23
storage 14-24
fueling instructions 10-7
fuse
installation 12-16
removal 12-16
testing 11-17

G

governor
governor system 16-2
governor cable
installation and adjustment 14-8
removal 14-8
ground cable testing 11-18

H

headlight bulb
installation 12-30
removal 12-29
headlight switch
installation 12-32
removal 12-32
testing 11-43
headlights
testing 11-50
horn
installation 12-36
removal 12-36
testing 11-52
horn switch
installation 12-37
removal 12-36
testing 11-53
hydrometer test 11-15

I

ignition coil
installation 12-26, 13-8
removal 12-25, 13-7
testing 11-28
ignition testing 11-27
inspection
drive clutch 17-5
drive clutch parts 17-9
driven clutch 17-13
fuel pump 14-21
spark plug 13-2
starter/generator
armature 12-6
bearing 12-5
brush spring 12-3
brushes 12-2
commutator 12-7
field coils 12-9
intake duct
installation 14-16
removal 14-15
repair 14-17

K

key switch
engine kill circuit testing 11-34
installation 12-14
removal 12-13
starter circuit testing (key-start) 11-20

starter circuit testing (pedal-start) 11-19
kill circuit, engine
testing 11-26, 11-35
kill limit switch
installation 12-17
removal 12-17
kill limit switch, engine
testing 11-34

L

low oil warning light
installation 12-22
removal 12-22
testing 11-36
lubrication
unitized transaxle 16-2
lubrication schedule
see periodic lubrication schedule

M

maintenance
battery 12-38
periodic lubrication schedule 10-5
periodic service schedule 10-3
muffler
see also exhaust system
installation 15-1
removal 15-1

N

neutral lockout
cam
installation 12-19
removal 12-19
testing 11-37
function 16-1
limit switch
installation 12-18
removal 12-18
testing 11-22

O

oil level sensor
installation 13-6
removal 13-6
testing 11-37
oil, engine 10-6

P

park brake limit switch
installation 12-34
removal 12-34
park brake pedal limit switch
testing 11-51
periodic lubrication schedule 10-5
periodic service schedule 10-3

R

reed valve
see breather valve
relay
installation 12-29
removal 12-28
testing 11-40, 11-41
relay, brake light
see brake light relay
reverse buzzer
front
installation 12-20
removal 12-20
limit switch
installation 12-21
removal 12-21
testing 11-36
rear
installation 12-20
removal 12-20
testing 11-36
RPM adjustment 14-11
RPM limiter
installation 12-25
removal 12-24
testing 11-28

S

schematic diagram 11-6
service schedule
see periodic service schedule
see also periodic lubrication schedule
service tools
torque converter tool kit 17-1
unitized transaxle 16-2
solenoid
installation 12-15
removal 12-14
testing 11-21
spark plug 13-1
cleaning, inspection and repair 13-2
gap adjustment 13-3
installation 13-3
removal 13-2
testing 13-2

specifications
torque 13-11
starter/generator
armature
ground test 12-8
inspection 12-6
servicing 12-4
assembly 12-4, 12-9
bearing
cleaning 12-5
inspection 12-5
removal 12-6
belt tension adjustment 12-11
brush spring
inspection 12-3
replacement 12-3
brushes 12-2
inspection 12-2
replacement 12-2
commutator 12-4
armature replacement 12-7
cleaning 12-7
inspection 12-7
disassembly 12-2, 12-4
field coil
inspection 12-9
removal 12-6
installation 12-10
removal 12-1
rework 12-9
testing 11-23, 11-25

T

taillight
installation 12-31
removal 12-31
taillight bulb
installation 12-31
removal 12-30
taillight socket
testing 11-49
test procedures 11-13
1 – battery 11-15
2 – fuse 11-17
3 – ground cables 11-18
4 – key switch starter circuit (pedal-start) 11-19
5 – key switch starter circuit (key-start) 11-20
6 – accelerator pedal limit switch 11-20
7 – solenoid 11-21
8 – neutral lockout limit switch 11-22
9 – starter/generator 11-23
10 – wire continuity 11-24
11 – starter/generator 11-25
12 – voltage regulator 11-25
13 – engine kill circuit 11-26
14 – ignition test 11-27
15 – RPM limiter 11-28
16 – ignition coil 11-28
17 – kill limit switch 11-34
18 – key switch (engine kill circuit) 11-34
19 – engine kill circuit 11-35
20 – reverse buzzer limit switch 11-36
21 – reverse buzzer 11-36
22 – oil level sensor 11-37
23 – low oil warning light 11-36
24 – neutral lockout cam 11-37
25 – battery load test 11-37
26 – fuel level sending unit 11-38
27 – fuel gauge 11-39
28 – hour meter 11-40
29 – relay (engine kill circuit) 11-40
30 – relay (starter and neutral lockout circuits) 11-41
31 – battery voltage supply 11-42
32 – headlight switch 11-43
33 – brake light relay 11-44
34 – voltage limiter 11-48
35 – taillight socket voltage 11-49
36 – taillight socket 11-49
37 – headlight 11-50
38 – park brake limit switch 11-51
39 – brake pedal limit switch 11-51
40 – horn 11-52
41 – horn switch 11-53
testing
armature ground test (starter/generator) 12-8
spark plug 13-2
torque converter 17-1
troubleshooting 17-1
troubleshooting
torque converter 17-1
vehicle troubleshooting guide 11-1

U

unitized transaxle 16-1
installation 16-16
lubrication 16-2
removal 16-7
service 16-2

V

voltage limiter
installation 12-32
removal 12-32

testing 11-48
voltage regulator
installation 12-12
removal 12-12
testing 11-25

W

wire continuity testing 11-24
wiring diagram 11-6

Your Comments Are Appreciated

Please select your category:

- ☐ Distributor/Dealer
- ☐ Individual Owner
- ☐ Other: _____
- ☐ Technician
- ☐ Golf Course Superintendent

In order to help us better serve you, please rate this publication in the following categories:

	Poor	Fair	Average	Good	Excellent
1. Ease of Understanding	☐	☐	☐	☐	☐
2. Ease of Finding Information	☐	☐	☐	☐	☐
3. Clarity of Illustrations	☐	☐	☐	☐	☐
4. Index Usability	☐	☐	☐	☐	☐
5. Troubleshooting Chart Usability	☐	☐	☐	☐	☐

Comments/Suggestions:

_____
_____
_____
_____
_____
_____
_____
_____
_____
_____
_____
_____
_____

Please fax a copy of this page to (706) 228-2662.

Thank You!
Club Car Technical Publications Department

Club Car, Inc.
P.O. Box 204658
Augusta, GA 30917-4658
USA

Web www.clubcar.com
Phone 1.706.863.3000
1.800.ClubCar
Int'l +1 706.863.3000
Fax 1.706.863.5808