Club Car®

2008 Turf/Carryall Maintenance and Service Manual

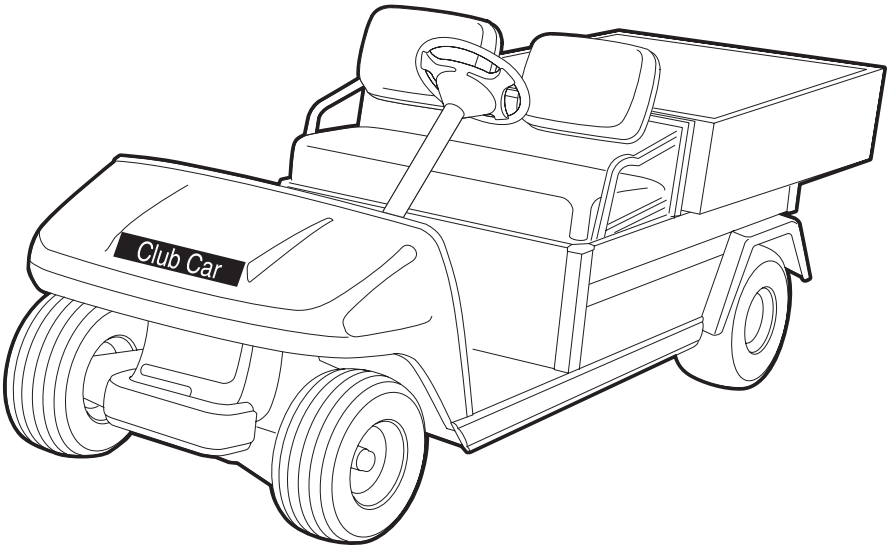

Turf 1, Turf 2, Turf 6,
Carryall 1, Carryall 2, Carryall 2 Plus, Carryall 6
Gasoline and Electric Vehicles

Manual Number 103373104
Edition Code 0907C1108B

FOREWORD

Club Car vehicles are designed and built to provide the ultimate in performance efficiency; however, proper maintenance and repair are essential for achieving maximum service life and continued safe and reliable operation.

This manual provides detailed information for the maintenance and repair of Turf and Carryall vehicles and should be used in conjunction with the appropriate maintenance and service supplement.

If you do not have the appropriate maintenance and service supplement, you may order one from your local Club Car representative. Maintenance and service supplements available include the following:

2008 IQ System Vehicle Maintenance and Service Supplement	**Publication Part No. 103373106**
2008 FE350 Gasoline Vehicle Maintenance and Service Supplement	**Publication Part No. 103373109**
2008 IQ Plus System Vehicle Maintenance and Service Supplement	**Publication Part No. 103373107**

This manual and corresponding maintenance and service supplement should be thoroughly reviewed prior to servicing the vehicle. The procedures provided must be properly implemented, and the DANGER, WARNING, and CAUTION statements must be heeded.

This manual was written for the trained technician who already has knowledge and skills in electrical and mechanical repair. If the technician does not have such knowledge and skills, attempted service or repairs to the vehicle may render the vehicle unsafe. For this reason, Club Car advises that all repairs and/or service be performed by an authorized Club Car distributor/dealer representative or by a Club Car factory-trained technician.

It is the policy of Club Car, Inc. to assist its distributors and dealers in continually updating their service knowledge and facilities so they can provide prompt and efficient service for vehicle owners. Regional technical representatives, vehicle service seminars, periodic service bulletins, maintenance and service manuals, and other service publications also represent Club Car's continuing commitment to customer support.

This manual, used in conjunction with the appropriate maintenance and service supplement, covers all aspects of typical vehicle service; however, unique situations do sometimes occur when servicing a vehicle. If it appears that a service question is not answered in this manual, you may write to us at: Club Car, Inc., P.O. Box 204658, Augusta, Georgia 30917-4658, USA, Attention: Technical Services, or contact a Club Car Technical Service Representative at (706) 863-3000, extension 3580.

Copyright © 2007 Club Car, Inc.
Club Car and *Carryall*
are registered trademarks of Club Car, Inc.
This manual effective August 1, 2007.

⚠ WARNING

- **Read Section 1 – Safety before attempting any service on the vehicle.**
- **Before servicing vehicle, read complete section(s) and any referenced information that may be relevant to the service or repair to be performed.**

NOTE: *This manual represents the most current information at the time of publication. Club Car, Inc. is continually working to further improve its vehicles and other products. These improvements may affect servicing procedures. Any modification and/or significant change in specifications or procedures will be forwarded to all Club Car distributors and dealers and will, when applicable, appear in future editions of this manual.*

Club Car, Inc. reserves the right to change specifications and designs at any time without notice and without the obligation of making changes to units previously sold.

There are no warranties expressed or implied in this manual. See the limited warranty found in the vehicle owner's manual or write to: Club Car, Inc., P.O. Box 204658, Augusta, GA 30917-4658, USA, Attention: Warranty Administration.

CONTENTS

SECTION 1 – SAFETY

General Warning 1-1

SECTION 2 – VEHICLE SPECIFICATIONS

Vehicle Specifications – Electric Vehicles 2-1
Vehicle Specifications – Gasoline Vehicles 2-3

SECTION 3 – GENERAL INFORMATION

General Information 3-1
Serial Number Identification 3-1
Storage – Gasoline Vehicle 3-2
Preparing the Gasoline Vehicle for Extended Storage 3-2
Returning the Stored Gasoline Vehicle to Service 3-4
Storage – Electric Vehicle 3-4
Preparing the Electric Vehicle for Extended Storage 3-5
Returning the Stored Electric Vehicle to Service 3-5

SECTION 4 – BODY AND TRIM

Cleaning the Vehicle 4-1
Front Body Repair 4-2
Stress Lines or Streaks 4-2
Minor Impact Damage/Deformations 4-2
Minor Scratches and Surface Blemishes 4-2
Small Scratches That Cannot Be Buffed Out 4-2
Touch-Up Paint Color Chart 4-3
Gouges, Punctures, Tears, Large Scratches, and Abrasions 4-3
Front Body 4-3
Front Body Removal 4-3
Front Body Installation 4-4
Tilt Bed – Turf 1, 2, Carryall 1, 2 and 2 Plus 4-5
Tilt Bed Removal 4-5
Tilt Bed Installation 4-5
Flat Bed – Turf 6 and Carryall 6 4-7
Flat Bed Removal 4-7
Flat Bed Installation 4-7

Flat Bed Trim – Turf 6 and Carryall 6 4-7
Flat Bed Trim Removal 4-7
Flat Bed Trim Installation 4-8
Access Door – Turf 6 and Carryall 6 4-10
Access Door Removal 4-10
Access Door Installation 4-10
Side Door – Turf 6 and Carryall 6 4-10
Side Door Removal 4-10
Side Door Installation 4-10
Rear Fender 4-10
Rear Fender Removal 4-10
Rear Fender Installation 4-12
Trailer Hitch (Optional on Some Models) 4-13
Trailer Hitch Removal 4-13
Trailer Hitch Installation 4-13
Tailskirt 4-13
Tailskirt Removal 4-13
Tailskirt Installation 4-13
Floor Mat 4-13
Front Floor Mat Removal 4-13
Front Floor Mat Installation 4-14
Rear Floor Mat Removal – Turf 6 and Carryall 6 Only 4-14
Rear Floor Mat Installation – Turf 6 and Carryall 6 Only 4-14
Bumper 4-14
Bumper Removal 4-14
Bumper Installation 4-14

SECTION 5 – ACCELERATOR AND BRAKE PEDAL GROUP

Brake Pedal and Park Brake 5-1
Brake Pedal Removal 5-1
Brake Pedal Installation 5-4
Park Brake Removal 5-5
Park Brake Installation 5-5
Accelerator Pedal – Gasoline Vehicles 5-6
Accelerator Pedal Removal – Gasoline Vehicles 5-6
Accelerator Pedal Installation – Gasoline Vehicles 5-8
Accelerator Pedal – Electric Vehicles 5-9
Accelerator Pedal Removal – Electric Vehicles 5-9
Accelerator Pedal Installation – Electric Vehicles 5-11
Pedal Group Adjustment – Gasoline Vehicles 5-11
Pedal Group Adjustment – Electric Vehicles 5-16

SECTION 6 – WHEEL BRAKE ASSEMBLIES

General Information 6-1
Brake Shoe Removal 6-1
Brake Assembly Cleaning (Self-Adjusting Brakes) 6-3
Brake Shoe Installation (Self-Adjusting Brakes) 6-5
Brake Adjustment (Self-Adjusting Brakes) 6-8
Brake Assembly Cleaning (Manually-Adjusted Brakes) 6-9
Brake Shoe Installation (Manually-Adjusted Brakes) 6-10
Brake Adjustment (Manually-Adjusted Brakes) 6-12
- Brake Cluster Adjustment 6-13
- Brake Cable Equalization 6-16
- Final Brake Cluster Adjustment 6-17
- Test Drive Vehicle 6-17

Brake Cluster Removal and Installation 6-17
- Rear Brake Cluster Removal 6-17
- Rear Brake Cluster Installation 6-18
- Front Brake Cluster Removal 6-18
- Front Brake Cluster Installation 6-19

Front Brake Cables 6-20
- Front Brake Cable Removal 6-20
- Front Brake Cable Installation 6-21

Rear Brake Cables 6-22
- Rear Brake Cable Removal 6-22
- Rear Brake Cable Installation 6-23

SECTION 7 – WHEELS AND TIRES

General Information 7-1
Wheels 7-1
- Wheel Removal 7-1
- Wheel Installation 7-1

Tires 7-2
- Tire Removal 7-2
- Tire Repair 7-3
- Tire Installation 7-3

SECTION 8 – REAR SUSPENSION

General Information 8-1
Shock Absorbers 8-1
- Shock Absorber Inspection and Removal 8-1
- Shock Absorber Installation 8-2

Multi-Leaf Springs 8-2
Multi-Leaf Spring Removal 8-2
Multi-Leaf Spring Installation 8-3
Snubber 8-6
Snubber Removal 8-6
Snubber Installation 8-6
Stabilizer Bar 8-7
Stabilizer Bar Removal 8-7
Stabilizer Bar Installation 8-8
Jounce Bumpers 8-8
Jounce Bumper Removal 8-8
Jounce Bumper Installation 8-8

SECTION 9 – STEERING AND FRONT SUSPENSION

General Information 9-1
Steering Wheel 9-1
Steering Wheel Removal 9-1
Steering Wheel Installation 9-2
Steering Column 9-2
Steering Column Removal 9-2
Steering Column Disassembly 9-4
Steering Column Assembly 9-5
Steering Column Installation 9-5
Steering Adjustment 9-7
Rack and Pinion 9-8
Rack and Pinion Removal 9-8
Rack and Pinion Disassembly 9-8
Rack and Pinion Assembly 9-10
Rack and Pinion Installation 9-12
Tie Rod and Drag Link 9-13
Tie Rod and Drag Link Removal 9-13
Tie Rod and Drag Link Installation 9-13
Front Suspension 9-14
Lubrication 9-14
Wheel Alignment 9-14

Front Suspension Components 9-16
Leaf Spring Removal 9-16
Leaf Spring Installation 9-16
Kingpin and Steering Spindle Removal 9-17
Kingpin and Steering Spindle Installation 9-22
Delta A-Plate Removal 9-22
Delta A-Plate Installation 9-22
Shock Absorber Removal 9-22
Shock Absorber Installation 9-23
Front Wheel Bearings and Hubs - 4-Wheel Brake Vehicles 9-23
Front Wheel Free Play Inspection 9-23
Front Wheel Bearings and Hub Removal 9-24
Front Wheel Bearings and Hub Installation 9-24

SECTION i – INDEX

SECTION 1 – SAFETY

To ensure the safety of those servicing Club Car vehicles, and to protect the vehicles from possible damage resulting from improper service or maintenance, the procedures in this manual must be followed.

It is important to note that throughout this manual there are statements labeled DANGER, WARNING, or CAUTION. These special statements relate to specific safety issues, and must be read, understood, and heeded before proceeding with procedures. There are statements labeled NOTE, which provide other essential service or maintenance information.

⚠ DANGER

- **A DANGER indicates an immediate hazard that will result in severe personal injury or death.**

⚠ WARNING

- **A WARNING indicates an immediate hazard that could result in severe personal injury or death.**

⚠ CAUTION

- **A CAUTION with the safety alert symbol indicates a hazard or unsafe practice that could result in minor personal injury.**

CAUTION

- **A CAUTION without the safety alert symbol indicates a potentially hazardous situation that could result in property damage.**

GENERAL WARNING

The following safety statements must be heeded whenever the vehicle is being operated, repaired, or serviced. Service technicians should become familiar with these general safety statements. Also, other specific safety statements appear throughout this manual and on the vehicle.

⚠ DANGER

- **Battery – Explosive gases! Do not smoke. Keep sparks and flames away from the vehicle and service area. Ventilate when charging or operating vehicle in an enclosed area. Wear a full face shield and rubber gloves when working on or near batteries.**
- **Battery – Poison! Contains acid! Causes severe burns. Avoid contact with skin, eyes, or clothing. Antidotes:**
  - **External: Flush with water. Call a physician immediately.**
  - **Internal: Drink large quantities of milk or water. Follow with milk of magnesia or vegetable oil. Call a physician immediately.**
  - **Eyes: Flush with water for 15 minutes. Call a physician immediately.**
- **Gasoline – Flammable! Explosive! Do not smoke. Keep sparks and flames away from the vehicle and service area. Service only in a well-ventilated area.**
- **Do not operate gasoline vehicle in an enclosed area without proper ventilation. The engine produces carbon monoxide, which is an odorless, deadly poison.**

⚠ WARNING

- **Follow the procedures exactly as stated in this manual, and heed all DANGER, WARNING, and CAUTION statements in this manual as well as those on the vehicle.**
- **Only trained technicians should service or repair the vehicle. Anyone doing even simple repairs or service should have knowledge and experience in electrical and mechanical repair. The appropriate instructions must be used when performing maintenance, service, or accessory installation.**
- **Prior to servicing the vehicle or leaving the vehicle unattended, turn the key switch OFF, remove the key, and place the Forward/Reverse handle in the NEUTRAL position. Chock the wheels when servicing the vehicle.**

Gasoline vehicles only:

- **To avoid unintentionally starting the vehicle:**
  - **Disconnect battery cables, negative (–) cable first (Figure 1-1, Page 1-3).**
  - **Disconnect the spark plug wire from the spark plug.**
- **Frame ground – Do not allow tools or other metal objects to contact frame when disconnecting battery cables or other electrical wiring. Do not allow a positive wire to touch the vehicle frame, engine, or any other metal component.**

Electric vehicles only:

- **Place Tow/Run switch in the TOW position before disconnecting or connecting the batteries. Failure to heed this warning could result in a battery explosion or severe personal injury.**
- **To avoid unintentionally starting the vehicle, disconnect the batteries as shown (Figure 1-2, Page 1-3 or Figure 1-3, Page 1-3 or Figure 1-4, Page 1-3).**
- **After disconnecting the batteries, wait 90 seconds for the controller capacitors to discharge.**
- **IQ Plus vehicles only: Use only 4-gauge (AWG) with low resistance terminals to replace battery wires.**

All vehicles:

- **Wear safety glasses or approved eye protection when servicing the vehicle. Wear a full face shield and rubber gloves when working on or near batteries.**
- **Do not wear loose clothing or jewelry such as rings, watches, chains, etc., when servicing the vehicle.**
- **Moving parts! Do not attempt to service the vehicle while it is running.**
- **Ensure battery connections are clean and properly tightened. See Battery Care in the appropriate Maintenance and Service Manual.**
- **Hot! Do not attempt to service hot engine or exhaust system. Failure to heed this warning could result in severe burns.**
- **Use insulated tools when working near batteries or electrical connections. Use extreme caution to avoid shorting of components or wiring.**
- **Check the vehicle owner's manual for proper location of all vehicle safety and operation decals and make sure they are in place and are easy to read.**
- **Any modification or change to the vehicle that affects the stability or handling of the vehicle, or increases maximum vehicle speed beyond factory specifications, could result in severe personal injury or death.**
- **Lift only one end of the vehicle at a time. Use a suitable lifting device (chain hoist or hydraulic floor jack) with 1000 lb. (454 kg) minimum lifting capacity. Do not use lifting device to hold vehicle in raised position. Use approved jack stands of proper weight capacity to support the vehicle and chock the wheels that remain on the floor. When not performing a test or service procedure that requires movement of the wheels, lock the brakes.**
- **If wires are removed or replaced, make sure wiring and wire harness are properly routed and secured. Failure to properly route and secure wiring could result in vehicle malfunction, property damage, personal injury, or death.**

WARNING CONTINUED ON NEXT PAGE...

⚠ WARNING

- **For vehicles with cargo beds, remove all cargo before raising the bed or servicing the vehicle. If the vehicle is equipped with a prop rod, ensure that it is securely engaged while bed is raised. Do not close bed until all persons are clear of cargo bed area. Keep hands clear of all crush areas. Do not drop cargo bed; lower gently and keep entire body clear. Failure to heed this warning could result in severe personal injury or death.**
- **Improper use of the vehicle or failure to properly maintain it could result in decreased vehicle performance, severe personal injury, or death.**
- **Do not leave children unattended on vehicle.**

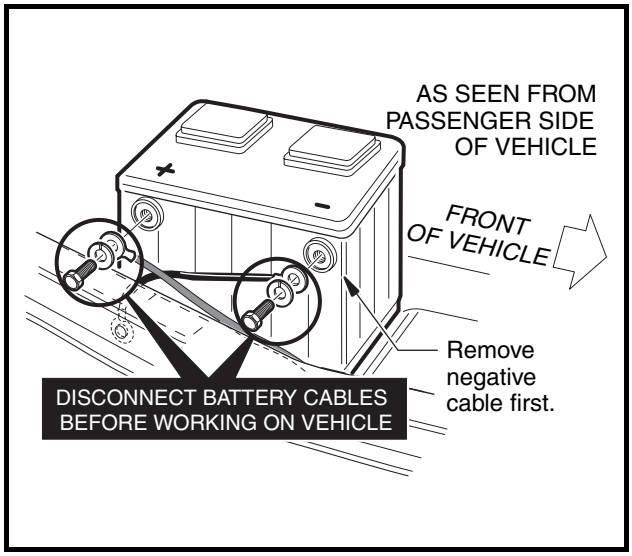

Figure 1-1 Gasoline Vehicle

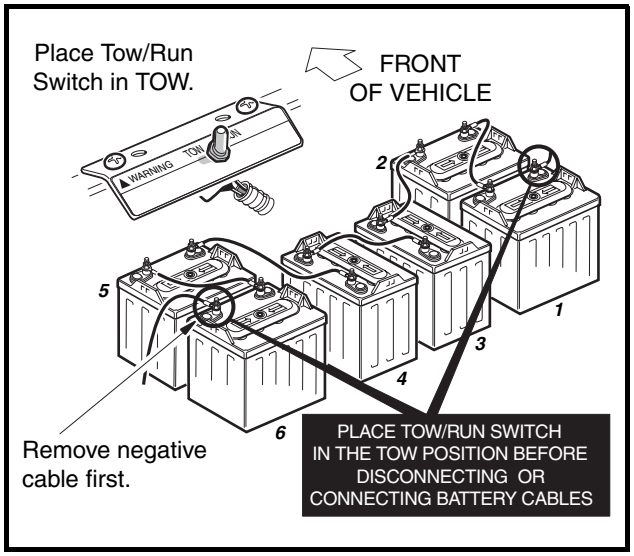

Figure 1-2 IQ System Vehicle

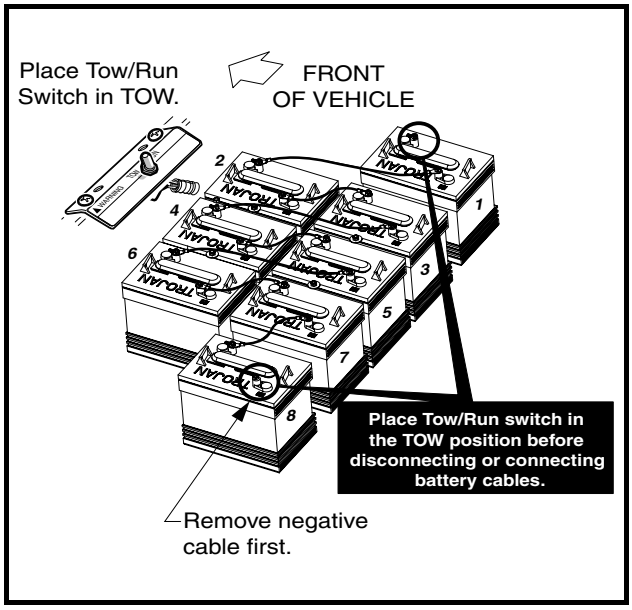

Figure 1-3 Turf 2/Carryall 2 IQ Plus Electric Vehicle

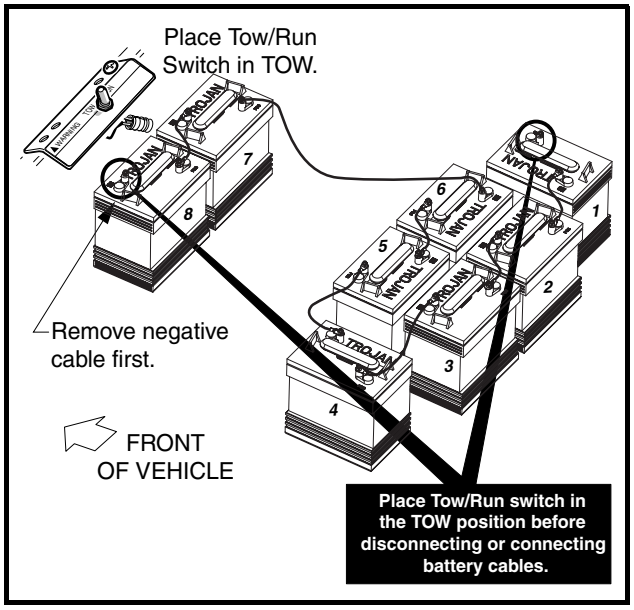

Figure 1-4 Carryall 6 IQ Plus System Vehicle

SECTION 2 – VEHICLE SPECIFICATIONS

VEHICLE SPECIFICATIONS – ELECTRIC VEHICLES

SPECIFICATIONS	Turf 1/Carryall 1 IQ System	Turf 2/Carryall 2 IQ Plus	Carryall 6 IQ Plus
POWER SOURCE			
Drive motor: Direct drive, 48 volts DC, shunt wound, 3.1 hp	•		
Drive motor: Direct drive, 48 volts DC, shunt wound, 3.7 hp		•	•
Transaxle: Double reduction helical gear with 12.3:1 direct drive axle	•		
Electrical system: 48 volts DC, reduced speed reverse	•	•	•
Batteries: High capacity, deep cycle, Trojan PowerDrive 8-volt, 117 min. capacity	•		
Batteries: High capacity, deep cycle, Trojan 6-volt, 160 min. capacity		•	•
Charger: Automatic, 17 amp; UL and CSA listed	•	•	•
STEERING/SUSPENSION/BRAKES			
Steering: Self-adjusting rack and pinion	•	•	•
Suspension: Front mono-leaf and rear multi-leaf springs with dual hydraulic shocks	•	•	•
Brakes: Mechanical brake cable system to self-adjusting drum brakes on each rear wheel. Park brake is automatically released. Self-adjusting multi-latch ratchet and pawl	•		
Brakes: Mechanical brake cable system to manually-adjusted drum brakes on all four wheels. Park brake is automatically released. Self-adjusting multi-latch ratchet and pawl		•	•
BODY/CHASSIS			
Frame/chassis: Twin I-Beam welded aluminum	•	•	•
Side and rear body: All aluminum	•	•	•
Front body: ArmorFlex®	•	•	•
Front body finish: Matched paint finish over molded-in color	•	•	•
Tires: 18 x 8.50 - 8 tubeless, 4 ply rated load range front and rear	•		
Tires: 18 x 8.50 - 8 tubeless, 6 ply rated load range front and rear		•	•
DIMENSIONS/WEIGHT			
Overall length: Standard flatbed configuration	100 in. (254 cm)	111 in. (282 cm)	134 in. (340 cm)
Overall width	49.25 in. (120 cm)	50 in. (127 cm)	49.25 in. (120 cm)
Overall height: At steering wheel	48 in. (122 cm)	48 in. (122 cm)	48 in. (122 cm)
Wheelbase	65.5 in. (166 cm)	77.5 in. (197 cm)	98.5 in. (250 cm)
Ground clearance	4.5 in. (11 cm)	4.5 in. (11 cm)	4.5 in. (11 cm)
Front wheel tread	34.5 in. (88 cm)	34.5 in. (88 cm)	34.5 in. (88 cm)
Rear wheel tread	38.5 in. (98 cm)	38.5 in. (98 cm)	38.5 in. (98 cm)
Weight: Standard electric vehicle	908 lb. (412 kg)	1185 lb. (537 kg)	1286 lb. (583 kg)

SPECIFICATIONS	Turf 1/Carryall 1 IQ System	Turf 2/Carryall 2 IQ Plus	Carryall 6 IQ Plus
Forward speed	12-15 mph (19-24 km/h)	14-16 mph (23-26 km/h)	14-16 mph (23-26 km/h)
Curb clearance circle (diameter)	17 ft.-6 in. (533 cm)	20 ft.-8 in. (630 cm)	24 ft.-8 in. (752 cm)
Turning radius per SAE J 695	101 in. (257 cm)	120 in. (305 cm)	144 in. (366 cm)
Intersecting aisle clearance	72 in. (183 cm)	77 in. (196 cm)	89.75 in. (228 cm)
Floorboard height	11.75 in. (30 cm)	11.75 in. (30 cm)	11.75 in. (30 cm)
Load bed height	27 in. (69 cm)	27.625 in. (70 cm)	27 in. (69 cm)
Seat height	30 in. (76 cm)	30.25 in. (77 cm)	30 in. (76 cm)
Load bed size: Box bed dimensions	37.6 in. x 45.1 in. x 9.3 in. (96 x 115 x 23 cm)	48.8 in. x 49.8 in. x 10.9 in. (124 x126 x 28 cm)	64.2 in. x 44 in. x 18.5 in. (163 x 112 x 47 cm)
Load bed size: Flat bed dimensions	35.8 in. x 44.3 in. (91 x 112 cm)	46.9 in. x 48.3 in. (119 x 126 cm)	67.6 in. x 44.2 in. (172 x 112 cm)
Vehicle rated capacity: Level surface only	800 lb. (363 kg)	1200 lb. (544 kg)	1500 lb. (680 kg)
Standard seating capacity	2	2	2
LIQUID CAPACITIES			
Transaxle	22 oz. (0.67 liters)		
TIRE PRESSURE			
Front and rear	18-20 psi (1.24-1.38 Bars)	30-34 psi (2.07-2.34 Bars)	30-34 psi (2.07-2.34 Bars)

VEHICLE SPECIFICATIONS – GASOLINE VEHICLES

SPECIFICATIONS	Turf 1/Carryall 1 Pedal-Start Gasoline	Turf 2/Carryall 2 Pedal-Start Gasoline	Carryall 2 Plus Key-Start Gasoline	Turf 6 Pedal-Start/ Carryall 6 Key-Start Gasoline
POWER SOURCE				
Engine: 4 cycle, OHV, 351 cc, 11.5 maximum hp @ 3600 rpm (per SAE J 1940/1349), single cylinder, air cooled, with pressure lubrication system	•	•	•	•
Fuel system: Side draft carburetor with float bowl, fixed jets, fuel filter, and impulse fuel pump	•	•	•	•
Governor: Automatic ground speed sensing, internally geared in unitized transaxle	•	•	•	•
Ignition: Transistor electronic ignition with electronic RPM limiter	•	•	•	•
Unitized transaxle: Fully synchronized forward and reverse with neutral (11.8:1 forward, 17.1:1 reverse)	•	•	•	•
Electrical system: 12 volt, 500 cca at 0 °F (–17.8 °C), 650 cca at 32 °F (0 °C). 105 minute reserve capacity and 35 amp charging capacity	•	•	•	•
Torque converter: Automatic, variable speed, dry type	•	•	•	•
STEERING/SUSPENSION/BRAKES				
Steering: Self-adjusting rack and pinion	•	•	•	•
Suspension: Front mono-leaf and rear multi-leaf springs with dual hydraulic shocks	•	•	•	
Suspension: Front and rear multi-leaf springs with dual hydraulic shocks				•
Brakes: Mechanical brake cable system to self-adjusting drum brakes on each rear wheel. Park brake is automatically released. Self-adjusting multi-latch ratchet and pawl	•	• Manually-Adjusted		
Brakes: Mechanical brake cable system to manually-adjusted drum brakes on all four wheels. Park brake is automatically released. Self-adjusting multi-latch ratchet and pawl		•	•	•
BODY/CHASSIS				
Frame/chassis: Twin I-Beam welded aluminum	•	•	•	•
Side and rear body: All aluminum	•	•	•	•
Front body: ArmorFlex®	•	•	•	•
Front body finish: Matched paint finish over molded-in color	•	•	•	•
Tires: 18 x 8.50 - 8 tubeless, 4 ply rated load range front and rear	•			
Tires: 18 x 8.50 - 8 tubeless, 6 ply rated load range front and rear		•	•	•
DIMENSIONS/WEIGHT				
Overall length: Standard flatbed configuration	100 in. (254 cm)	111 in. (282 cm)	111 in. (282 cm)	134 in. (340 cm)
Overall width	49.25 in. (120 cm)	50 in. (127 cm)	50 in. (127 cm)	49.25 in. (120 cm)
Overall height: At steering wheel	48 in. (122 cm)	48 in. (122 cm)	48 in. (122 cm)	48 in. (122 cm)
Wheelbase	65.5 in. (166 cm)	77.5 in. (197 cm)	77.5 in. (197 cm)	98.5 in. (250 cm)

Specifications continued on next page . . .

SPECIFICATIONS	Turf 1/Carryall 1 Pedal-Start Gasoline	Turf 2/Carryall 2 Pedal-Start Gasoline	Carryall 2 Plus Key-Start Gasoline	Turf 6 Pedal-Start/ Carryall 6 Key-Start Gasoline
Ground clearance	4.5 in. (11 cm)	4.5 in. (11 cm)	4.5 in. (11 cm)	4.5 in. (11 cm)
Front wheel tread	34.5 in. (88 cm)	34.5 in. (88 cm)	34.5 in. (88 cm)	34.5 in. (88 cm)
Rear wheel tread	38.5 in. (98 cm)	38.5 in. (98 cm)	38.5 in. (98 cm)	38.5 in. (98 cm)
Weight: Standard gasoline vehicle (dry fuel tank)	658 lb. (298 kg)	749 lb. (340 kg)	786 lb. (357 kg)	893 lb. (405 kg)
Forward speed	12-15 mph (19-24 km/h)	14-16 mph (23-26 km/h)	17-18 mph (27-29 km/h)	14-16 mph (23-26 km/h)
Curb clearance circle (diameter)	17 ft.-6 in. (533 cm)	20 ft.-8 in. (630 cm)	20 ft.-8 in. (630 cm)	24 ft.-8 in. (752 cm)
Turning radius per SAE J 695	101 in. (257 cm)	120 in. (305 cm)	120 in. (305 cm)	144 in. (366 cm)
Intersecting aisle clearance	72 in. (183 cm)	77 in. (196 cm)	77 in. (196 cm)	89.75 in. (228 cm)
Floorboard height	11.75 in. (30 cm)	11.75 in. (30 cm)	11.75 in. (30 cm)	11.75 in. (30 cm)
Load bed height	27 in. (69 cm)	27.625 in. (70 cm)	27.625 in. (70 cm)	27 in. (69 cm)
Seat height	30 in. (76 cm)	30.25 in. (77 cm)	30.25 in. (77 cm)	30 in. (76 cm)
Load bed size: Box bed dimensions	37.6 in. x 45.1 in. x 9.3 in. (96 x 115 x 23 cm)	48.8 in. x 49.8 in. x 10.9 in. (124 x126 x 28 cm)	48.8 in. x 49.8 in. x 10.9 in. (124 x126 x 28 cm)	64.2 in. x 44 in. x 18.5 in. (163 x 112 x 47 cm)
Load bed size: Flat bed dimensions	35.8 in. x 44.3 in. (91 x 112 cm)	46.9 in. x 48.3 in. (119 x 126 cm)	46.9 in. x 48.3 in. (119 x 126 cm)	67.6 in. x 44.2 in. (172 x 112 cm)
Vehicle rated capacity: Level surface only	800 lb. (363 kg)	1200 lb. (544 kg)	1200 lb. (544 kg)	1500 lb. (680 kg)
Standard seating capacity: persons	2	2	2	2
LIQUID CAPACITIES				
Engine crankcase without filter	32 oz. (.95 liters)	32 oz. (.95 liters)	32 oz. (.95 liters)	32 oz. (.95 liters)
Engine crankcase with filter	38 oz. (1.12 liters)	38 oz. (1.12 liters)	38 oz. (1.12 liters)	38 oz. (1.12 liters)
Unitized transaxle	27 oz. (.8 liters)	27 oz. (.8 liters)	27 oz. (.8 liters)	27 oz. (.8 liters)
Fuel tank	7 gallons (26.5 liters)	7 gallons (26.5 liters)	7 gallons (26.5 liters)	7 gallons (26.5 liters)
TIRE PRESSURE				
Front and rear	16-18 psi (1.10-1.24 Bars)	30-34 psi (2.07-2.34 Bars)	30-34 psi (2.07-2.34 Bars)	30-34 psi (2.07-2.34 Bars)

SECTION 3 – GENERAL INFORMATION

⚠ DANGER

- **See General Warning, Section 1, Page 1-1.**

⚠ WARNING

- **See General Warning, Section 1, Page 1-1.**

GENERAL INFORMATION

Important features unique to the different models covered in this manual are highlighted. Club Car, Inc. recommends the owner/operator read and understand this manual and pay special attention to features specific to their vehicle(s).

Each vehicle is equipped with either a two-position key switch or a three-position key switch. Vehicles equipped with a two-position key switch are referred to as “pedal-start” and vehicles equipped with a three-position key switch are referred to as “key-start.”

Refer to the owner’s manual provided with the vehicle for information on the following topics:

- Controls and Indicators
- Pre-Operation and Daily Safety Checklist
- Driving Instructions
- Bed Latch
- Prop Rod
- Loading and Unloading
- Towing with a Vehicle
- Transporting on a Trailer
- Subsequent Owner Registration
- Warranties

SERIAL NUMBER IDENTIFICATION

The serial number of the vehicle is printed on a bar code decal mounted on the frame directly above the accelerator pedal (Example: F0401-123456 for electric or FG0401-123456 for gasoline) **(Figure 3-1, Page 3-2)**. There is a second serial number decal mounted on the front body frame behind the center dash panel. The center dash panel must be removed to view this number **(Figure 3-2, Page 3-2)**. **See following NOTE.**

NOTE: *Have the vehicle serial number available when ordering parts or making inquiries.*

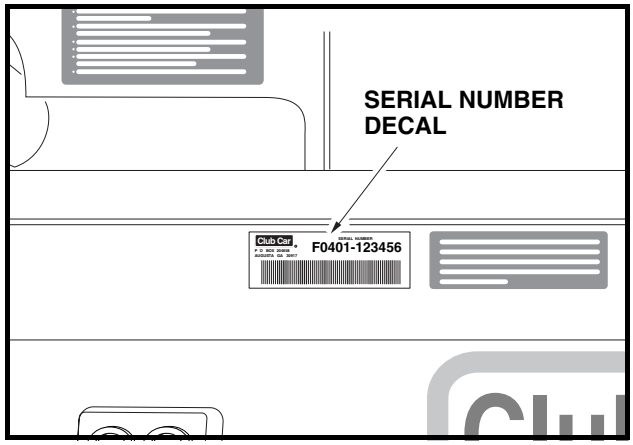

Figure 3-1 Serial Number Decal

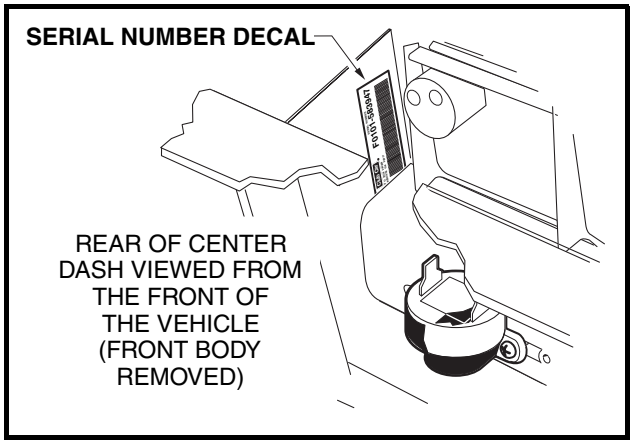

Figure 3-2 Serial Number Decal Behind Dash

STORAGE – GASOLINE VEHICLE

See General Warning, Section 1, Page 1-1.

⚠ DANGER

- **Never attempt to drain gasoline when the engine is hot or while it is running.**
- **Be sure to clean up any spilled gasoline before operating the vehicle.**
- **Store gasoline in an approved gasoline container only. Store in a well-ventilated area away from sparks, open flames, heaters, or heat sources.**
- **Keep gasoline out of the reach of children.**
- **Do not siphon gasoline from the vehicle.**

⚠ WARNING

- **Turn the key switch to the OFF position, remove the key, and leave the Forward/Reverse handle in the NEUTRAL position during storage. This is to prevent unintentionally starting the vehicle or a fire hazard.**
- **Turn fuel shut-off valve to closed (OFF) position (Figure 3-3, Page 3-3).**
- **Do not attempt to charge frozen batteries or batteries with bulged cases. Discard the battery. Frozen batteries can explode.**

⚠ CAUTION

- **Batteries in a low state of charge will freeze at low temperatures.**

PREPARING THE GASOLINE VEHICLE FOR EXTENDED STORAGE

1. Unload the vehicle so that tires are supporting only the weight of the vehicle.
2. Batteries should be clean and free of corrosion. Wash tops and terminals of batteries with a solution of baking soda and water (1 cup (237 mL) baking soda per 1 gallon (3.8 L) of water). Rinse solution off batteries. Do not allow this solution to enter the batteries. Be sure terminals are tight. Let the terminals dry and then coat them with Battery Terminal Protector Spray (CCI P/N 1014305).

3. Store vehicle in a cool, dry place. This will minimize battery self-discharge. If the battery appears to be weak, have it charged by a trained technician. Use an automotive-type 12-volt battery charger rated at 10 amps or less.

4. Drain carburetor and seal the fuel tank.

   4.1. Place the Forward/Reverse handle in the NEUTRAL position and the neutral lockout cam in the MAINTENANCE position. Turn the fuel shut-off valve to the closed (OFF) position **(Figure 3-3, Page 3-3)** and run the engine until fuel remaining in the carburetor and fuel lines is depleted and the engine stalls. Return the neutral lockout cam to the OPERATE position.

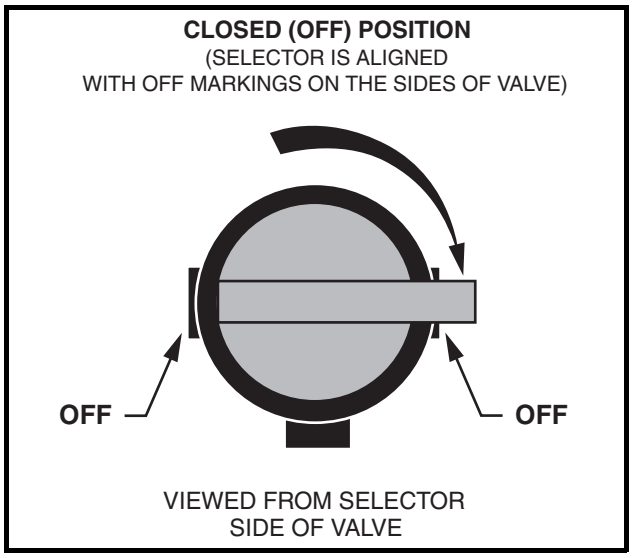

Figure 3-3 Fuel Shut-off Valve – Closed Position

   4.2. Loosen, but do not remove, the carburetor drain screw and drain fuel remaining in bowl into a small container, then pour the fuel from the container into vehicle fuel tank. Tighten the carburetor drain screw.

   4.3. Fill fuel tank to about 1 inch (2.5 cm) from top of fuel tank and, following manufacturer's directions, add a commercially available fuel stabilizer (such as Sta-Bil®).

   4.4. Disconnect fuel vent line from fuel tank vent nipple.

   4.5. Plug the fuel tank vent nipple so that it is air tight. We recommend using a slip-on vinyl cap.

5. Disconnect the battery cables as instructed. **See WARNING "To avoid unintentionally starting..." in General Warning, Section 1, Page 1-2.**

6. To protect the engine, remove spark plug and pour 1/2 ounce (14.2 mL) of SAE 10 weight oil into engine through the spark plug hole. Rotate engine crankshaft by hand several times and then install the spark plug.

7. Adjust tires to recommended tire pressure. **See Section 2 – Vehicle Specifications.**

8. Perform semiannual periodic lubrication. **See Periodic Lubrication Schedule, Section 10 – Periodic Maintenance, in the appropriate maintenance and service supplement.**

9. Thoroughly clean front body, rear body, seats, cargo bed, engine compartment, and underside of vehicle.

10. Do not engage the park brake. Chock the wheels to prevent the vehicle from rolling.

RETURNING THE STORED GASOLINE VEHICLE TO SERVICE

1. Connect the battery cables, positive (+) cable first and tighten hardware to 144 in-lb (16 N·m.
2. Restore fuel system to operation.
   2.1. Remove plug from the fuel tank vent nipple and connect fuel vent line to nipple. Open the fuel shut-off valve **(Figure 3-4, Page 3-4)**. Make sure the valve is fully open. A partially closed fuel shut-off valve **(Figure 3-5, Page 3-4)** combined with the use of the choke can result in a fouled spark plug and engine failure.

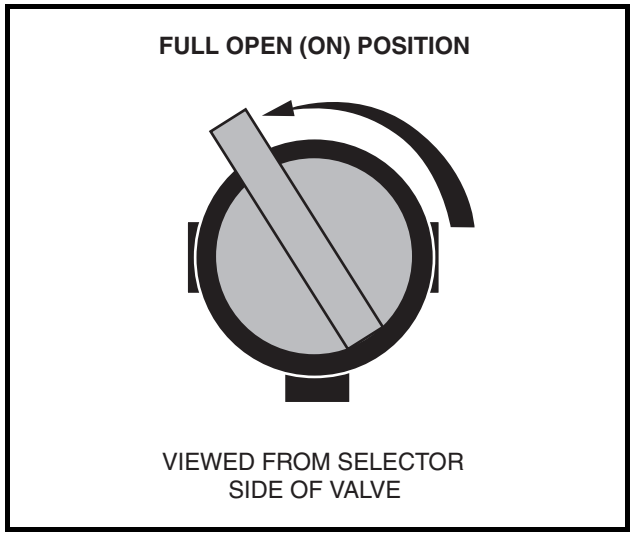

Figure 3-4 Fuel Shut-off Valve – Open Position

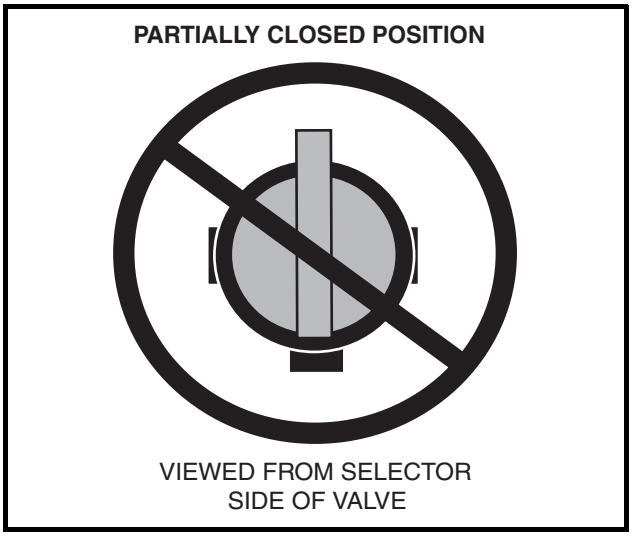

Figure 3-5 Incorrect Fuel Shut-off Valve Setting

   2.2. Place the Forward/Reverse handle in the NEUTRAL position and the neutral lockout cam in the MAINTENANCE position. Crank the engine until fuel is pumped into the carburetor and fuel lines and the engine starts. Turn the engine off and return neutral lockout cam to the OPERATE position. **See following NOTE.**

NOTE: *Due to the oil added to the engine in preparation for storage, engine may smoke excessively for a short while when running it for the first time after storage.*

3. Adjust tires to recommended tire pressure. **See Section 2 – Vehicle Specifications.**
4. Perform the Pre-Operation and Daily Safety Checklist. **See the vehicle owner's manual.**

STORAGE – ELECTRIC VEHICLE

See General Warning, Section 1, Page 1-1.

⚠ WARNING

- **Turn the key switch to the OFF position, remove the key, and leave the Forward/Reverse handle in the NEUTRAL position during storage. This is to prevent unintentionally starting the vehicle or a fire hazard. Place Tow/Run switch in TOW position.**
- **Do not attempt to charge frozen batteries or batteries with bulged cases. Discard the battery. Frozen batteries can explode.**

⚠ CAUTION

- **Batteries in a low state of charge will freeze at low temperatures.**
- **To avoid exposing electrical components to moisture and subsequent damage, do not use any type of pressure washing or steam cleaning equipment to wash the vehicle.**
- **IQ System and IQ Plus vehicles only: Place the Tow/Run switch in the TOW position.**

PREPARING THE ELECTRIC VEHICLE FOR EXTENDED STORAGE

1. Unload the vehicle so that tires are supporting only the weight of the vehicle.
2. Fully charge batteries. **See Section 13 – Batteries, in the appropriate maintenance and service supplement**.
3. Batteries should be clean and free of corrosion. Wash tops and terminals of batteries with a solution of baking soda and water (1 cup (237 mL) baking soda per 1 gallon (3.8 L) of water). Rinse solution off batteries. Do not allow this solution to enter the batteries. Be sure the terminals are tight. Let the terminals dry and then coat them with Battery Terminal Protector Spray (CCI P/N 1014305).
4. Store vehicle in a cool, dry place. This will minimize battery self-discharge.
5. Adjust tires to recommended tire pressure. **See Section 2 – Vehicle Specifications.**
6. Perform semiannual periodic lubrication. **See Periodic Lubrication Schedule, Section 10 – Periodic Maintenance in the appropriate maintenance and service supplement.**
7. Thoroughly clean front body, rear body, seats, cargo bed, battery compartment, and underside of vehicle.
8. Do not engage the park brake. Chock the wheels to prevent the vehicle from rolling.
9. Keep batteries fully charged during storage.

NOTE: *Leave battery chargers plugged in during storage. The onboard computer will automatically activate the charger when necessary. If charger cannot remain plugged in, or AC power will not be available during extended storage, disconnect the battery cables for storage.* ***See WARNING "To avoid unintentionally starting..." in General Warning, Section 1, Page 1-2.***

CAUTION

- **Be sure to check the batteries and charger monthly to maintain correct water level and ensure the charger is operating correctly during storage.**

RETURNING THE STORED ELECTRIC VEHICLE TO SERVICE

1. If necessary, connect batteries and tighten hardware to 110 in-lb (12.4 N·m).
2. Fully charge batteries. **See Section 13 – Batteries in the appropriate maintenance and service supplement.**
3. Adjust tires to recommended tire pressure. **See Section 2 – Vehicle Specifications.**
4. Perform the Pre-Operation and Daily Safety Checklist. **See the vehicle owner's manual.**

SECTION 4 – BODY AND TRIM

⚠ DANGER

- **See General Warning, Section 1, Page 1-1.**

⚠ WARNING

- **See General Warning, Section 1, Page 1-1.**

CLEANING THE VEHICLE

See General Warning, Section 1, Page 1-1.

CAUTION

- **Do not use detergents or cleaning solvents that contain ammonia, aromatic solvents, or alkali materials on body panels or seats.**
- **Do not allow battery acid to drip on body panels. Battery acid will cause permanent damage. Wash spilled battery acid from body panels immediately.**

Each vehicle is equipped with an injection molded ArmorFlex® front body and aluminum rear body. Use a mild soap or detergent with a sponge or soft cloth for normal cleaning. Battery acid, fertilizers, tars, asphalt, creosote, paint, or chewing gum should be removed immediately to prevent possible stains. Because the finish on the front body is the same as the finish on today's automobiles, commercial automotive cleaning products should be used. For general cleaning of the aluminum rear body, use a mild liquid soap and a sponge or soft bristle brush. To remove oxidation or discoloration from aluminum, use a commercially available aluminum cleaner paste and fine grade (no. 00) steel wool.

Club Car does not recommend any type of pressure washing or steam cleaning. Such a process will expose electrical components to moisture. Moisture entering electrical components can result in water damage and subsequent component failure.

The seats of the vehicle will last longer with proper cleaning. To preserve seat appearance, clean regularly with mild soap or detergent applied with a sponge or soft cloth. Use a soft bristle brush to clean areas that are especially soiled. Use the following guidelines:

Light Soiling – A solution of 10% liquid soap and warm water applied with a soft, damp cloth is recommended. A soft bristle brush may be used if necessary. Wipe off any residue with a water dampened cloth.

For Difficult Stains – Dampen a soft, white cloth with a solution of 10% household bleach (sodium hypochlorite) and 90% water. Rub gently to remove stain, then rinse with a water dampened cloth to remove bleach concentration.

For More Difficult Stains – Perform previous procedure using full-strength bleach; or allow bleach to puddle on affected area for approximately 30 minutes. Rinse with a water dampened cloth to remove any remaining bleach concentration.

CAUTION

- **To prevent damage to the vehicle when removing difficult stains or heavy soiling, remove the seat bottom from the vehicle first.**

FRONT BODY REPAIR

See General Warning, Section 1, Page 1-1.

STRESS LINES OR STREAKS

Repeatedly flexing the front body may cause white stress lines or streaks in the finish. To remove them:

1. Hold a heat gun 12 inches (30 cm) away from the affected area, with the gun on its lowest heat setting.
2. Slowly wave the heat gun back and forth over the affected area until the streak fades.
3. It may be necessary to move the gun closer to the body to fade the streak, but under no circumstance should the gun be held closer than 6 inches (15 cm) to the body. **See following CAUTION.**

CAUTION

- **Holding heat gun too close to body could melt body or damage finish.**

MINOR IMPACT DAMAGE/DEFORMATIONS

Minor impact damage in the front body can be repaired using a procedure similar to the one used to remove stress lines. To remove deformations resulting from minor impact damage:

1. Hold a heat gun 12 inches (30 cm) away from the affected area, with the gun on its lowest heat setting.
2. Periodically remove the heat gun and bend the body, using a push block, in the opposite direction of the deformation.
3. Continue heating and bending the body until the original shape returns. Under no circumstance should the gun be held closer than 6 inches (15 cm) to the body. **See preceding CAUTION.**

MINOR SCRATCHES AND SURFACE BLEMISHES

For minor scratches or blemishes in the ArmorFlex body that do not penetrate the finish:

1. Thoroughly clean the affected area using a strong, non-abrasive detergent and hot water, then clean with Ultra-Kleen® Solvent Cleaner to remove any oil-based contaminants.
2. Lightly buff imperfection with a clean, soft cloth or buff pad. Do not use any kind of polishing compound on monocoat finished body assemblies.
3. Wax the entire body part to restore luster and weather protection.

SMALL SCRATCHES THAT CANNOT BE BUFFED OUT

1. Thoroughly clean the affected area and then dry.
2. Using 240 grit or finer sandpaper, lightly sand scratch to feather edges. Finish sand scratch with 320 grit or finer paper to remove gloss from surface. Sand as little body surface as possible beyond scratch. **See following CAUTION.**

CAUTION

- **Be careful not to sand completely through the finish to the body material. If the finish is sanded through and the thermo plastic olefin (TPO) body material is exposed, refer to Gouges, Punctures, Tears, Large Scratches, and Abrasions on page 4-3.**

3. Using the brush provided with the touch-up paint (available from Club Car Service Parts, see following color chart), apply paint to the scratch. Multiple layers of paint may be required to fill the scratch.
4. Allow paint to dry completely (approximately 10-20 minutes), then lightly buff the imperfection.
5. Apply wax to the entire body part to restore luster and weather protection.

TOUCH-UP PAINT COLOR CHART

COLOR	CCI P/N
Beige	101997201
White	101997202
Red	101997203
Gray	101997204
Dark Gray	101997205
Royal Blue (Pacific Blue)	101997206
Black	101997207
Dark Green	101997209
Classic Blue (Navy)	101997211
Burgundy	101997212

GOUGES, PUNCTURES, TEARS, LARGE SCRATCHES, AND ABRASIONS

Touch-up is not recommended. Replace the entire body part or have it repaired by a professional paint and body repair shop with experience repairing TPO bodies.

FRONT BODY

See General Warning, Section 1, Page 1-1.

FRONT BODY REMOVAL

1. Remove screws (8) and lock nuts (9) and lift front bumper (6) from vehicle frame **(Figure 4-1, Page 4-4)**.
   1.1. **Turf 1 and Carryall 1 vehicles:** Remove blind rivets (10).
2. **Vehicles equipped with a heavy-duty front bumper (1):**
   2.1. Remove the two carriage bolts (5), lock nuts (3), and spacers (4) from the heavy-duty bumper mounting positions located on both sides of the front body.
   2.2. Remove carriage bolts (2) and lock nuts (3) from the heavy-duty bumper support braces and remove bumper.
3. Remove carriage bolts (15), lock nuts (17), and washers (16) from front body trim. Remove screws (14) from top of front body.
4. Loosen, but do not remove, screws (18) holding front body trim against front body.

Front Body Removal, Continued:

5. **Vehicles equipped with headlights:** Disconnect the light wiring harness from the headlight assemblies.
6. Pull front body (12) from under trim (13) and remove from vehicle.

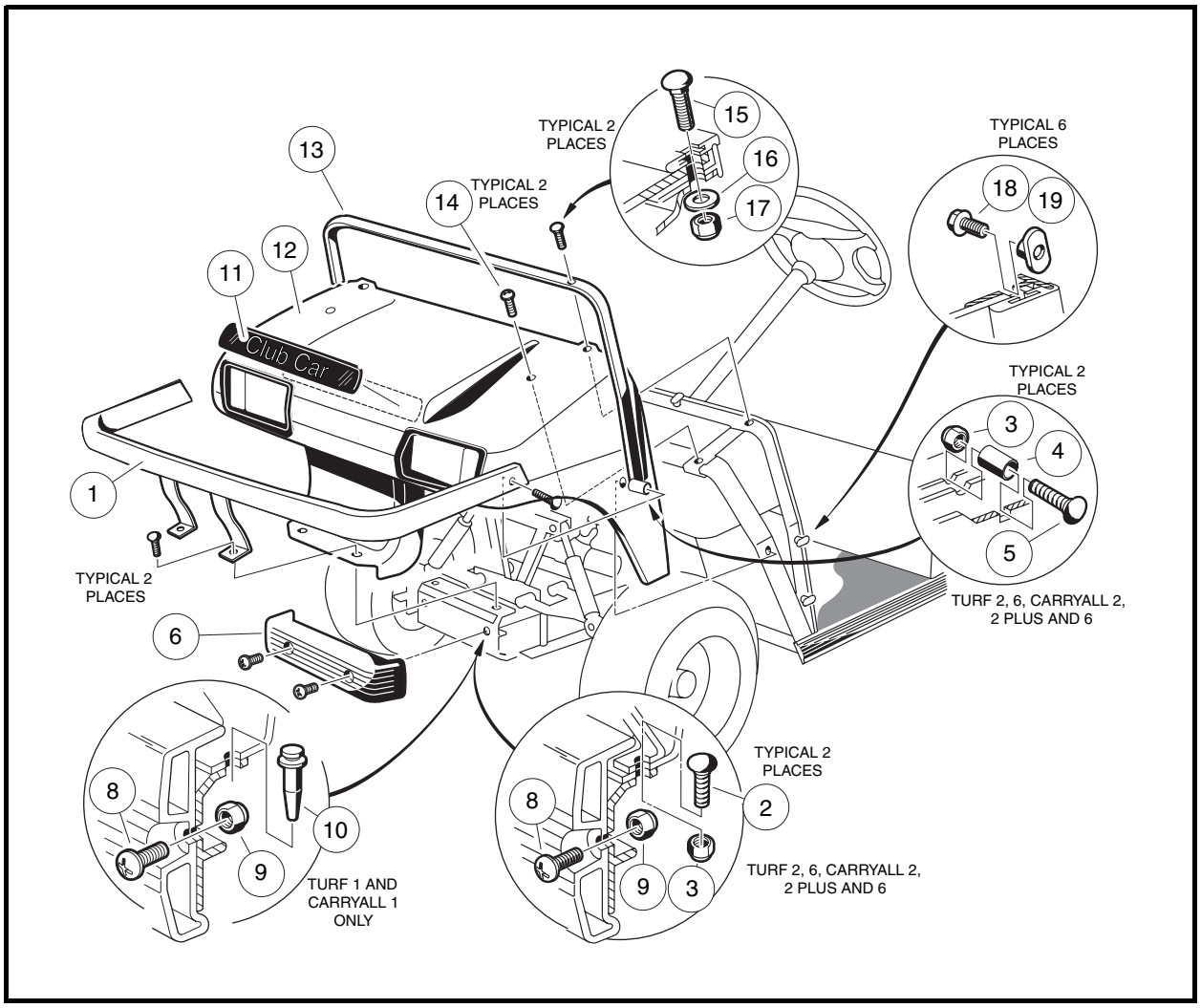

Figure 4-1 Front Body Assembly

FRONT BODY INSTALLATION

1. Install front body (12) under trim (13), align holes and finger-tighten screws (14) holding front body against frame **(Figure 4-1, Page 4-4)**.
2. Install carriage bolts (15), washers (16), and lock nuts (17) onto front body trim. Tighten bolts to 11 ft-lb (14.9 N·m). Tighten screws (14) to 20 in-lb (2.3 N·m). **See following NOTE.**

NOTE: *If installing a new front body, two 5/16-inch holes must be drilled after the body has been placed on the vehicle. Use the body trim (13) as a guide for drilling the holes.*

3. Tighten screws (18) holding front body trim against front body to 17 in-lb (1.9 N·m).
4. **Vehicles equipped with headlights:** Reconnect the light wiring harness to the headlight assemblies.

5. **Vehicles equipped with a heavy-duty front bumper:**
   5.1. Install two carriage bolts (2) and lock nuts (3) from the heavy-duty front bumper support braces and install bumper (1). Tighten bolts to 65 in-lb (7.3 N·m) **(Figure 4-1, Page 4-4)**.
   5.2. Install two carriage bolts (5), spacers (4), and lock nuts (3) into heavy-duty bumper mounting positions located on sides of front body (12). Tighten bolts to 65 in-lb (7.3 N·m).
6. **Turf 1 and Carryall 1 vehicles:** Install two push type blind rivets (10) that secure lower front body to frame **(Figure 4-1, Page 4-4)**.
7. Install front bumper onto vehicle and install screws (8) and lock nuts (9). Tighten to 65 in-lb (7.3 N·m).

TILT BED – TURF 1, 2, CARRYALL 1, 2 AND 2 PLUS

See General Warning, Section 1, Page 1-1.

NOTE: *Tilt bed removal and installation will be easier with a helper.*

TILT BED REMOVAL

For Turf 6 and Carryall 6 flat bed removal, see page 4-7.

1. **Turf 2, Carryall 2, and 2 Plus only:** Raise bed and secure prop rod (17) in prop rod track (18). Hold bed securely in an upright position. Remove cotter pin (23) and flat washer (22) from top end of prop rod where prop rod attaches to bed. Remove prop rod (17) from bed and place prop rod between prop rod track (18) and rear body panel. Lower bed onto vehicle frame **(Figure 4-2, Page 4-6)**.
2. Remove two lock nuts (10) from left and right hinge assemblies (3 and 25).
3. Apply slight upward pressure (by hand) on the rear of the bed to relieve pressure on the hinges, and remove the hinge bolts (9) from the hinge assemblies.
4. Raise rear edge of bed approximately 6 inches (15.2 cm) and pull bed assembly toward rear of vehicle approximately 3 inches (7.6 cm) to release bed latch assembly (2) from latch plate (1).
5. Lift bed from vehicle.

TILT BED INSTALLATION

1. Hold bed at a slight angle (front of bed lower than rear of bed) to vehicle and place front edge of bed onto vehicle frame. Bed latches (5) should engage with latch plates (1) **(Figure 4-2, Page 4-6)**.
2. Lower edge of bed onto vehicle and align hinge brackets (3) with bed hinge (25).
3. Start the bolts (9) into left and right hinge assemblies (3 and 25). It may be necessary to use an alignment tool to align holes in hinge bracket with steel bushing in hinge assembly.
4. Use a small hammer to lightly tap bolts through hinge assembly.
5. Install a nylon lock nut (10) on each bolt (9) and tighten to 15 ft-lb (21 N·m).
6. **Turf 2, Carryall 2, and 2 Plus only:** Lift bed and place the prop rod (17) in bed mounting hole. Install a 3/8-inch flat washer (22) and a new cotter pin (23) on prop rod **(Figure 4-2, Page 4-6)**.

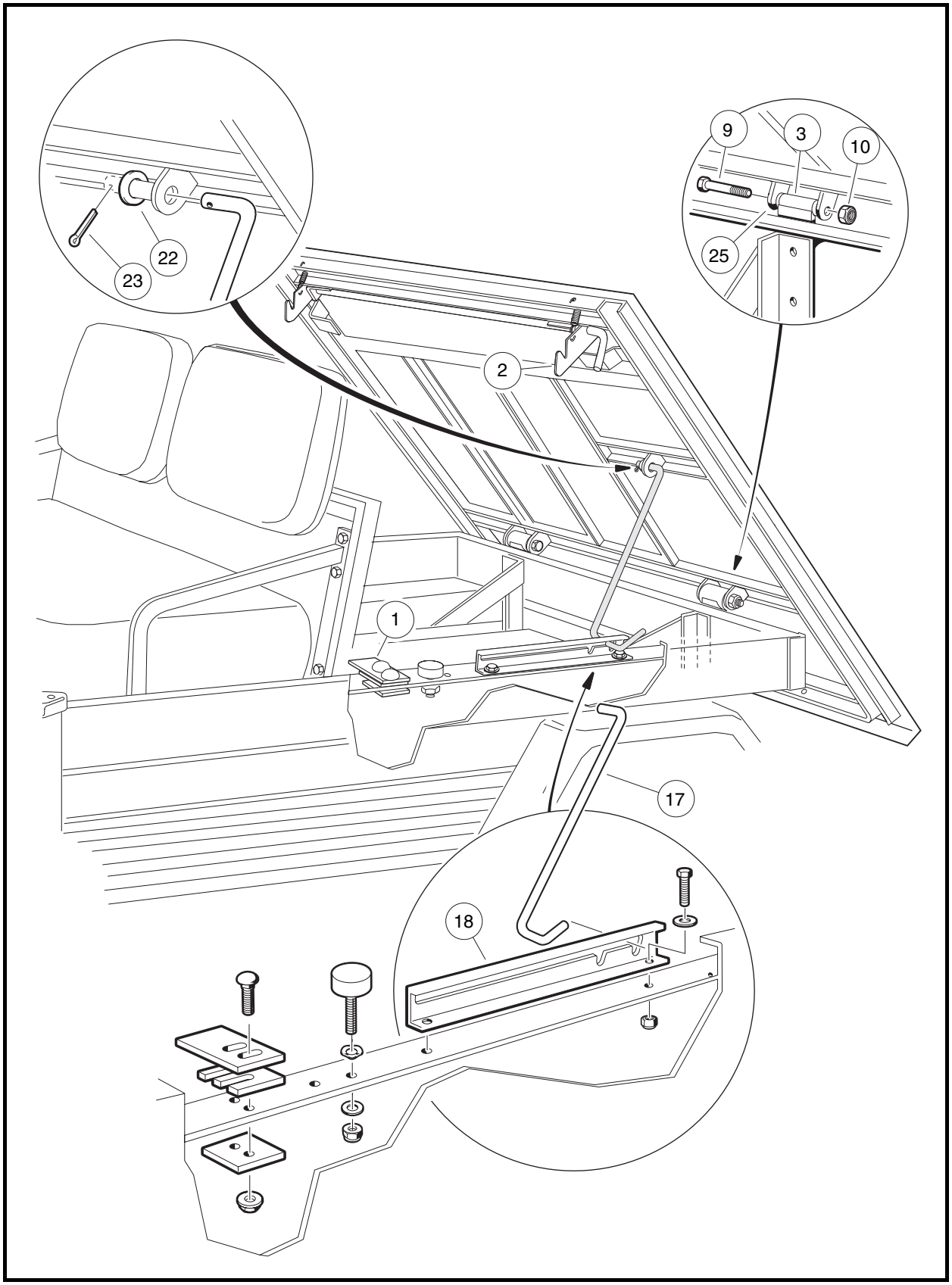

Figure 4-2 Tilt Bed – Turf 1, 2, Carryall 1, 2, and 2 Plus

FLAT BED – TURF 6 AND CARRYALL 6

See General Warning, Section 1, Page 1-1.

NOTE: *Flat bed removal and installation will be easier with a helper.*

FLAT BED REMOVAL

1. Open access door in bed (5) and remove two lock nuts (20), four flat washers (19), and two 1/4 x 4 bolts (18). Close and latch access door **(Figure 4-3, Page 4-8)**.
2. Remove two lock nuts (10) from left and right flat bed hinge assemblies.
3. Remove two 3/8 x 3 -3/8 bolts (9). Lift bed from vehicle.

FLAT BED INSTALLATION

1. Place bed on vehicle with bed front edge 1 inch (2.5 cm) from seat back support panel (28) and open access door (5) **(Figure 4-3, Page 4-8)**.
2. Raise rear edge of bed 6 inches from vehicle frame and position bed so the left and right hand bed supports are resting on the support bumpers (24).
3. Lower rear edge of bed onto vehicle and make sure hinge brackets align with bed hinge.
4. Start the bolts (9) into left and right hinge assemblies. It may be necessary to use an alignment tool to align holes in hinge bracket with steel bushing in hinge assembly.
5. Install a nylon lock nut (10) on each bolt and tighten to 14 ft-lb (18.9 N·m).
6. Install 1/4 x 4 bolts (18), flat washers (19), and lock nuts (20) through the bed frame and vehicle frame on both sides of vehicle. Tighten to 75 in-lb (8 N·m) **(Figure 4-3, Page 4-8)**.
7. Close access door and secure left and right door latches.

FLAT BED TRIM – TURF 6 AND CARRYALL 6

See General Warning, Section 1, Page 1-1.

FLAT BED TRIM REMOVAL

1. Release access door latches (11) and open access door (12) **(Figure 4-4, Page 4-9)**.
2. Remove bolts, flat washers, and lock nuts that secure bed to vehicle frame.
3. Raise bed and place prop rod in bed support frame.
4. Remove four bolts (4), flat washers (5), and lock nuts (6) from trim strips (3) on front and rear edge of bed. Remove trim strips from bed.
5. Remove two bolts (7) and lock nuts (8) from the bracket (10) on driver-side trim strip (1). Remove bracket from bed.
6. Remove remaining hardware securing driver-side trim strip and remove trim strip from bed.
7. Repeat steps 5 and 6 to remove passenger side trim strip and brackets.

FLAT BED TRIM INSTALLATION

1. Install trim in the reverse order of removal.
2. Tighten bolts (4 and 7) to 8 ft-lb. (10.8 N·m) **(Figure 4-4, Page 4-9)**.
3. Install bolts, flat washers, and lock nuts that secure bed to vehicle frame. Tighten bolts to 75 in-lb (8 N·m).

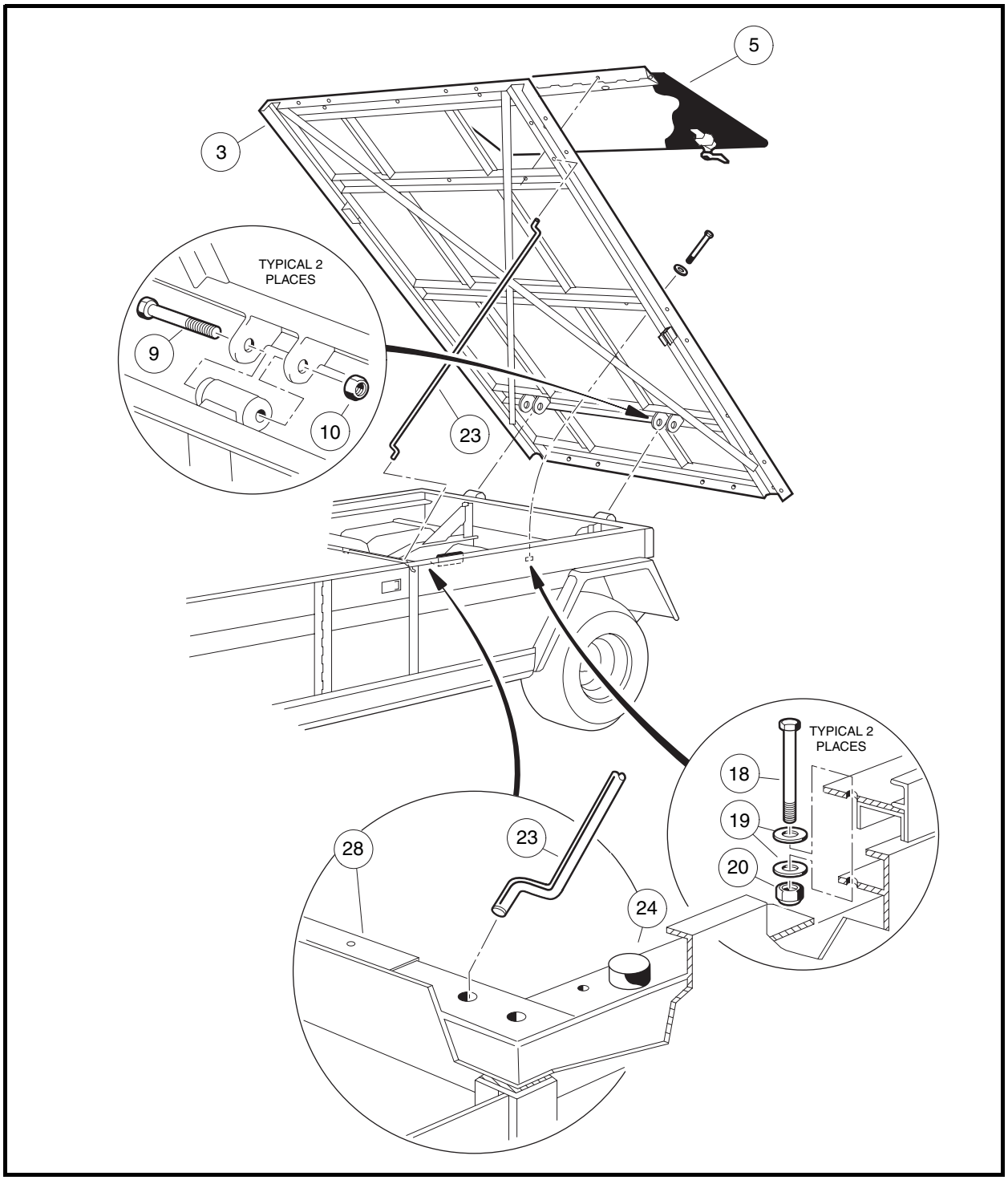

Figure 4-3 Flat Bed – Turf 6 and Carryall 6

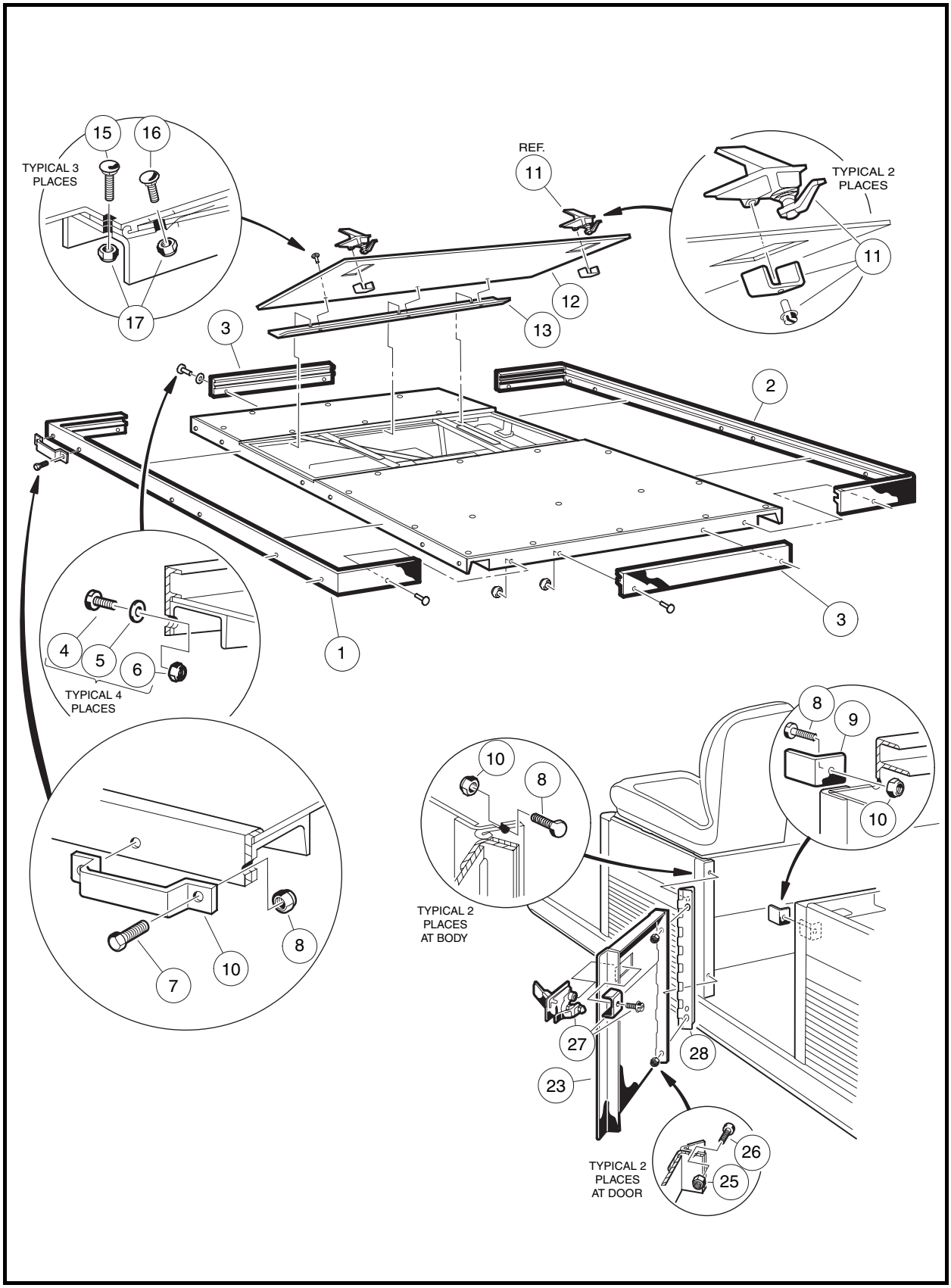

Figure 4-4 Flat Bed Trim, Access Door, and Side Door – Turf 6 and Carryall 6

ACCESS DOOR – TURF 6 AND CARRYALL 6

See General Warning, Section 1, Page 1-1.

ACCESS DOOR REMOVAL

1. Raise levers on left and right hand door latches (11), rotate them 180 degrees and open access door. Rest door against seat back support panel **(Figure 4-4, Page 4-9)**.
2. Remove three lock nuts (17) and bolts (16) from access door side of hinge.
3. Remove access door from cargo bed.

ACCESS DOOR INSTALLATION

1. Install access door in the reverse order of removal **(Figure 4-4, Page 4-9)**.
2. Tighten nuts (17) to 8 ft-lb (10.8 N·m).
3. Close access door and secure both door latches (11).

SIDE DOOR – TURF 6 AND CARRYALL 6

See General Warning, Section 1, Page 1-1.

SIDE DOOR REMOVAL

1. Lift door latch lever (27), rotate 180 degrees, and open side door **(Figure 4-4, Page 4-9)**.
2. Remove two 1/4 x 5/8 bolts (26) and lock nuts (25) from door hinge.
3. Remove side door from rear body.

SIDE DOOR INSTALLATION

1. Install side doors in the reverse order of removal.
2. Tighten bolts to 35 in-lb (3.9 N·m). **See following NOTE**.

NOTE: *When installing side door and hinge assembly, make sure mounting bolts are positioned so that when side door is closed, the mounting bolts do not prevent the side door from being closed all the way.*

REAR FENDER

See General Warning, Section 1, Page 1-1.

REAR FENDER REMOVAL

Turf 6, Carryall 6 and other vehicles with taillights:

1. Remove taillight assembly.
   1.1. Remove the two screws (14) that secure taillight (15) to the rear fender **(Figure 4-6, Page 4-12)**.
   1.2. Disconnect the three taillight wires.

All vehicles:

2. Remove two nylon lock nuts (3), flat washers (1), and 1/4 x 1 bolts (2) from front of fender (6) **(Figure 4-5, Page 4-11 or Figure 4-6, Page 4-12)**.

3. Remove two nylon lock nuts (3), flat washers (1), and 1/4 x 1 bolts (2) and flat washers (1) from the top of fender (6) **(Figure 4-5, Page 4-11 or Figure 4-6, Page 4-12)**.

Turf 6 and Carryall 6 only:

4. Remove the rear reverse buzzer.

   4.1. Remove pan-head screws (16) connecting reverse buzzer (17) to rear fender (6) and disconnect the two wires from the reverse buzzer **(Figure 4-6, Page 4-12)**.

All vehicles:

5. Remove fender (6) from vehicle **(Figure 4-5, Page 4-11 or Figure 4-6, Page 4-12)**.

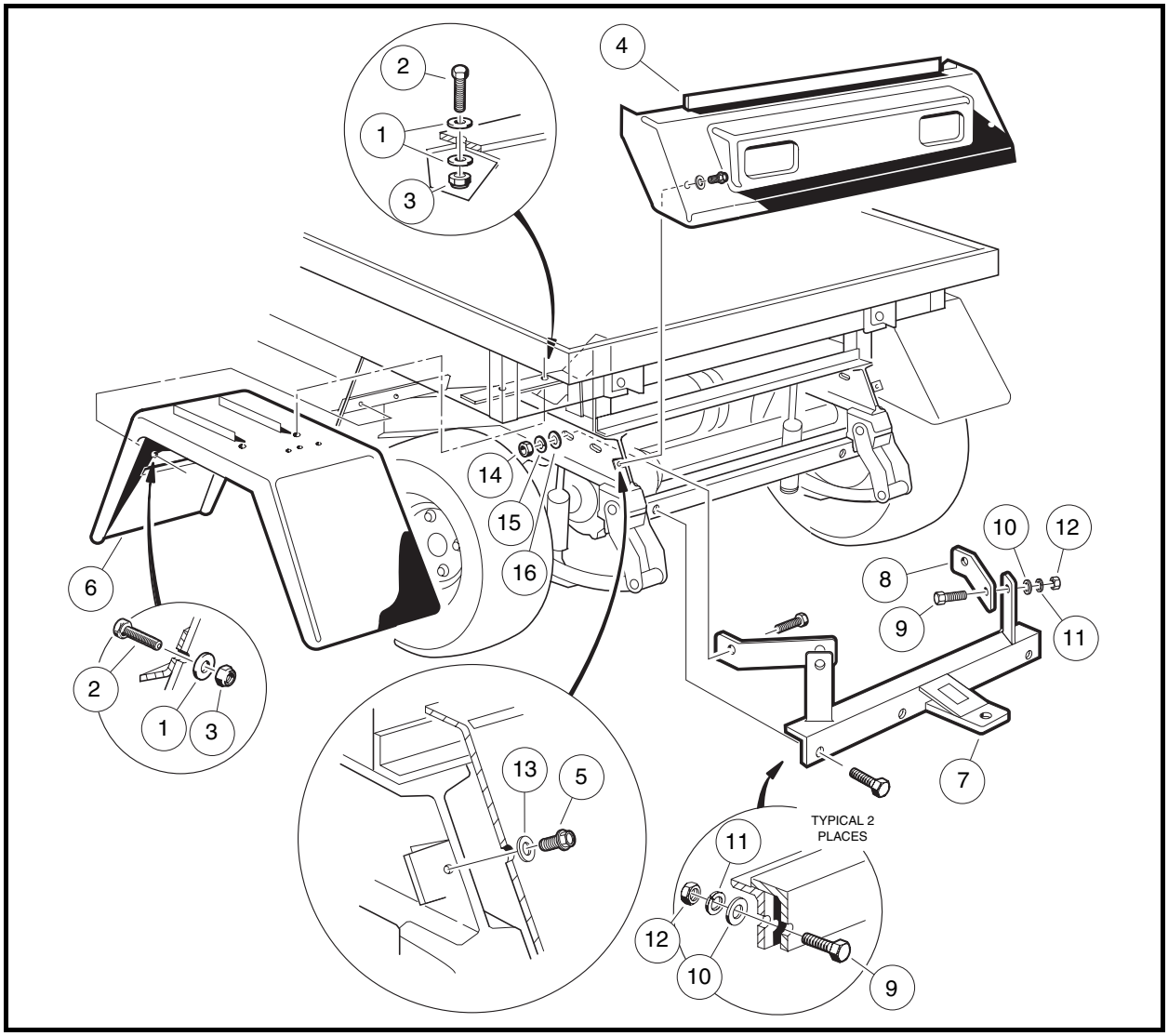

Figure 4-5 Rear Fender, Trailer Hitch, and Tailskirt – Turf 1, 2, Carryall 1, 2, and 2 Plus

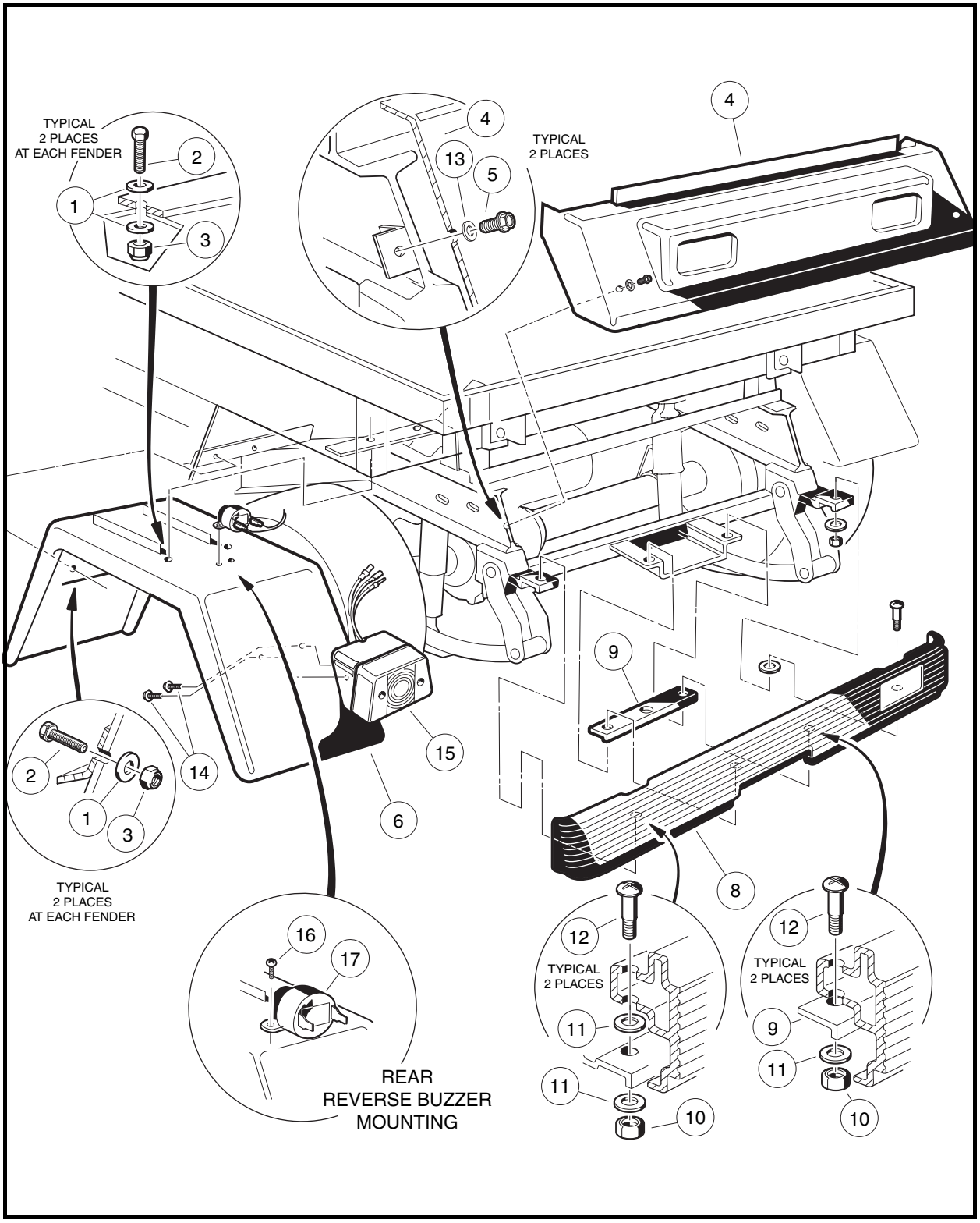

Figure 4-6 Rear Fender and Tailskirt – Turf 6 and Carryall 6

REAR FENDER INSTALLATION

1. Install rear fender in the reverse order of removal. Tighten bolts (2) to 35 in-lb (4.0 N·m).

TRAILER HITCH (OPTIONAL ON SOME MODELS)

See General Warning, Section 1, Page 1-1.

TRAILER HITCH REMOVAL

1. Remove the tailskirt. **See Tailskirt Removal on page 4-13.**
2. Where the hitch (7) is mounted to frame, remove two nuts (12), lock washers (11), flat washers (10), and bolts (9) **(Figure 4-5, Page 4-11)**.
3. Where the hitch (7) is mounted to hitch brace (8), remove the nut (12), lock washer (11), flat washer (10), and bolt (9).
4. Remove hitch (7) from vehicle.

TRAILER HITCH INSTALLATION

1. Install trailer hitch (7) in the reverse order of removal. **(Figure 4-5, Page 4-11)**. Tighten hardware to 15 ft-lb (20.3 N·m).

TAILSKIRT

See General Warning, Section 1, Page 1-1.

TAILSKIRT REMOVAL

1. Remove two thread-forming screws (5) and flat washers (13) from tailskirt (4) and lift tailskirt from vehicle frame **(Figure 4-5, Page 4-11 or Figure 4-6, Page 4-12)**.

TAILSKIRT INSTALLATION

1. Insert upper edge of tailskirt (4) under, and in front of, back edge of rear body **(Figure 4-5, Page 4-11 or Figure 4-6, Page 4-12)**.
2. Align holes in tailskirt (4) with holes in vehicle frame. Position tailskirt flush against frame.
3. Install two thread-forming screws (5) and flat washers (13) in tailskirt and tighten to 80 in-lb (9.0 N·m).

FLOOR MAT

See General Warning, Section 1, Page 1-1.

FRONT FLOOR MAT REMOVAL

1. Remove the brake and accelerator pedals. **See Section 5 – Accelerator and Brake Pedal Group.**
2. Remove horn switch if so equipped.
3. Remove the top edge of the floor mat from the overlapping flange under the dash.
4. Lift the mat from the vehicle.

FRONT FLOOR MAT INSTALLATION

1. Install the floor mat in the reverse order of removal.
2. Install the brake and accelerator pedals. **See Section 5 – Accelerator and Brake Pedal Group.**

REAR FLOOR MAT REMOVAL – TURF 6 AND CARRYALL 6 ONLY

1. On the driver or passenger side of the vehicle, gently pry the edges of the floor mat and pull the floor mat in the direction of the front of the vehicle so that it is no longer under the lip of the body located directly behind the floor mat.
2. Slightly bend the floor mat on each side of the vehicle to free it from the center body assembly located in front of the floor mat.
3. Lift the floor mat from the vehicle.

REAR FLOOR MAT INSTALLATION – TURF 6 AND CARRYALL 6 ONLY

1. Install the floor mat in the reverse order of removal.

BUMPER

See General Warning, Section 1, Page 1-1.

BUMPER REMOVAL

1. Remove four lock nuts (10), six flat washers (11), four phillips bolts (12), and mounting plate (9) from rear bumper (8) **(Figure 4-6, Page 4-12)**.
2. Lift bumper from vehicle.

BUMPER INSTALLATION

1. Install the rear bumper in the reverse order of removal. Tighten nuts to 65 in-lb (7.3 N·m) **(Figure 4-6, Page 4-12)**.

SECTION 5 – ACCELERATOR AND BRAKE PEDAL GROUP

⚠ DANGER

- **See General Warning, Section 1, Page 1-1.**

⚠ WARNING

- **See General Warning, Section 1, Page 1-1.**

BRAKE PEDAL AND PARK BRAKE

See General Warning, Section 1, Page 1-1.

BRAKE PEDAL REMOVAL

1. Disconnect the battery cables as instructed. **See WARNING "To avoid unintentionally starting..." in General Warning, Section 1, Page 1-2.**
2. Place chocks under the rear wheels and lift the front end of the vehicle with a chain hoist or floor jack. Place jack stands under the front cross tube of the vehicle frame and lower the vehicle onto the jack stands. **See following WARNING.**

⚠ WARNING

- **Lift only one end of the vehicle at a time. Use a suitable lifting device (chain hoist or hydraulic floor jack) with 1000 lb. (454 kg) minimum lifting capacity. Do not use lifting device to hold vehicle in raised position. Use approved jack stands of proper weight capacity to support the vehicle and chock the wheels that remain on the floor. When not performing a test or service procedure that requires movement of the wheels, lock the brakes.**

3. Remove the brake pedal assembly.
   - 3.1. Disconnect the equalizer rod(s) (14 and 36) from the pedal shaft by removing the clevis pin(s) (16) and bow-tie pin(s) (15) **(Figure 5-1, Page 5-2 or Figure 5-2, Page 5-3)**.
   - 3.2. Remove the nuts (34), flat washers (27), bolts (28), and mounting blocks (26). If the mounting blocks (26) show signs of excessive wear or are damaged, they must be replaced with new ones before installing pedal assembly **(Figure 5-1, Page 5-2 or Figure 5-2, Page 5-3)**.
   - 3.3. Remove the nut (25) and brake stop bumper (24) **(Figure 5-1, Page 5-2 or Figure 5-2, Page 5-3)**.
   - 3.4. Lift the pedal assembly (10) through the floorboard **(Figure 5-3, Page 5-4)**.

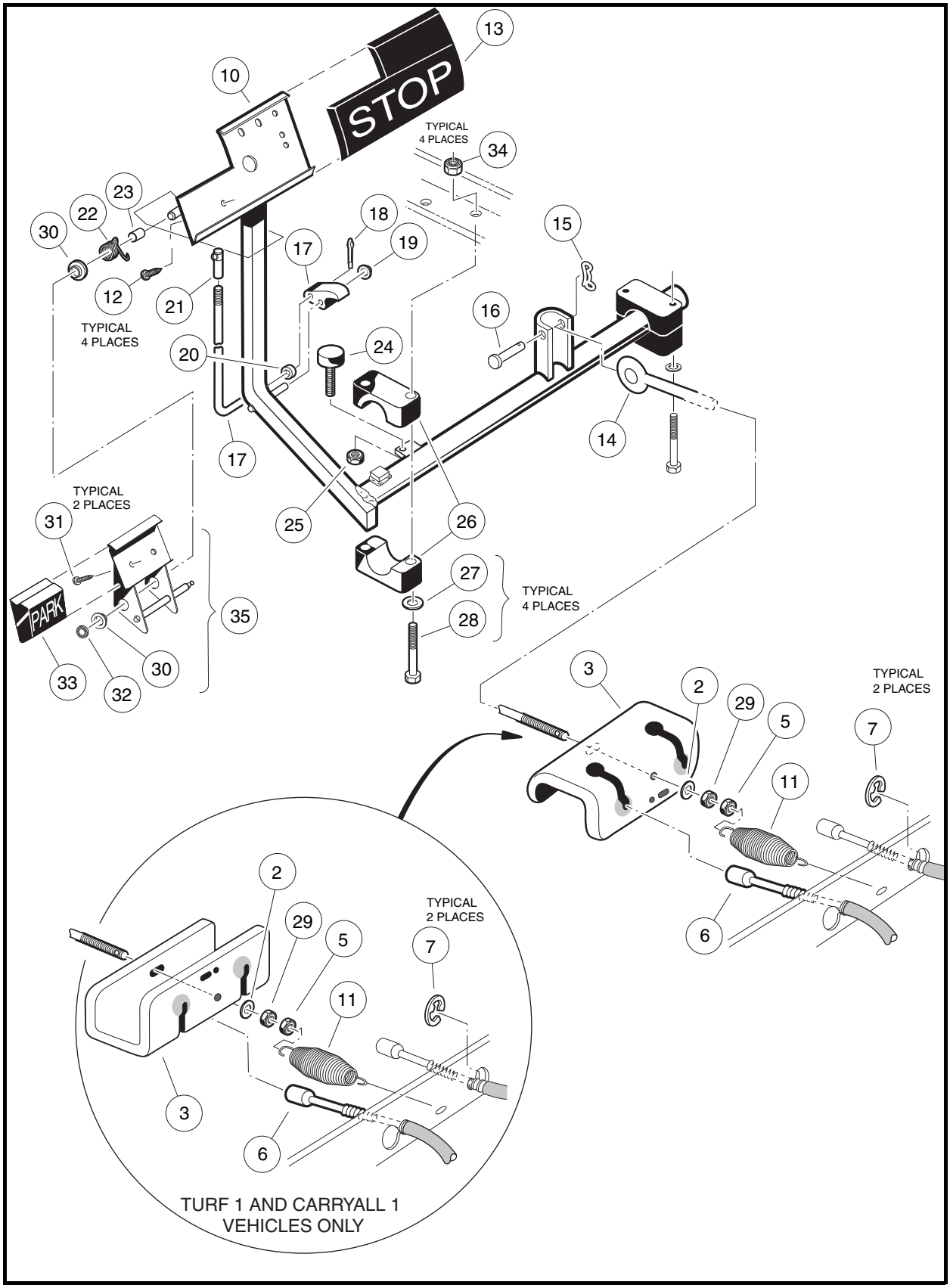

Figure 5-1 Brake and Park Brake Pedal Assembly and Mounting – Two-Wheel Brake Vehicles

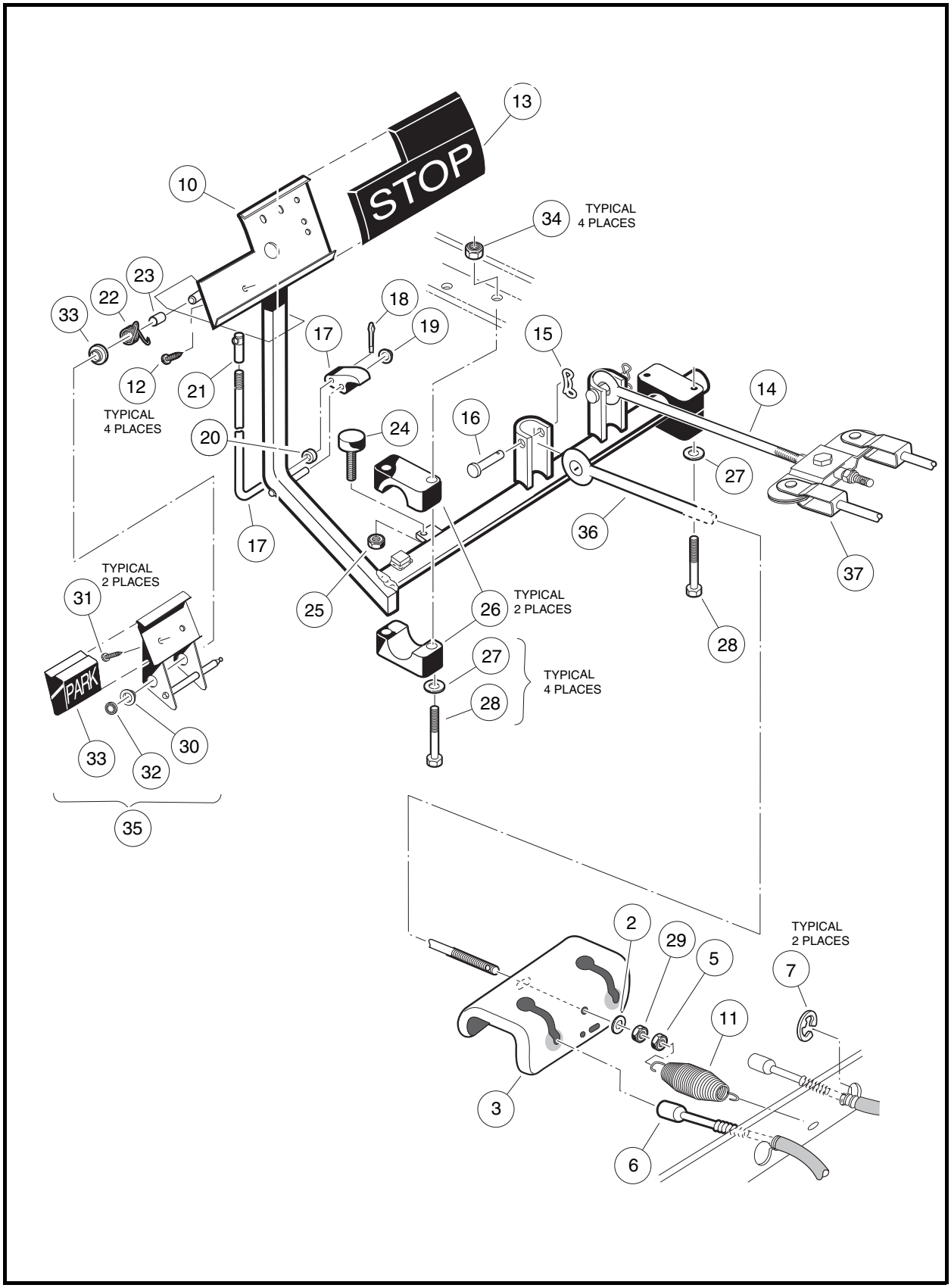

Figure 5-2 Brake and Park Brake Pedal Assembly and Mounting – Four-Wheel Brake Vehicles

BRAKE PEDAL INSTALLATION

1. From the top side of the floorboard, insert the brake pedal assembly (10) **(Figure 5-1, Page 5-2 or Figure 5-2, Page 5-3)** through the opening in the floor as shown **(Figure 5-3, Page 5-4)** and install the brake pedal stop bumper (24) **(Figure 5-1, Page 5-2 or Figure 5-2, Page 5-3)** on the brake pedal assembly, but do not tighten the jam nut (25) at this time.
2. Secure the equalizer rod(s) (14 and 36) to the brake pedal assembly (10) with clevis pin(s) (16) and bow-tie pin(s) (15) as shown **(Figure 5-1, Page 5-2 or Figure 5-2, Page 5-3)**. Tighten to 17 in-lb (1.9 N·m). **See following NOTE.**

NOTE: *On two-wheel brake vehicles, the equalizer rod is secured to the left (driver-side) channel on the brake pedal weldment.*

For Turf 2 and Carryall 2 vehicles with four-wheel brakes and Carryall 2 Plus vehicles, there are two equalizer rods. The long rod (21-1/4 inches (54 cm)) is secured to the left (driver-side) channel, and the short rod (9-1/4 inches (23.5 cm)) is secured to the right (passenger-side) channel on the brake pedal weldment.

On Turf 6 and Carryall 6 vehicles, there are two equalizer rods. The long rod (42-1/4 inches (107.3 cm)) is secured to the left (driver-side) channel on the brake pedal weldment, and the short rod (9-1/4 inches (23.5 cm)) is secured to the right (passenger-side) channel on the brake pedal.

3. Position and attach brake pedal assembly, mounting blocks (26), and washers (27) to vehicle frame as shown. Tighten the bolts (28) and nuts to 113 in-lb (12.8 N·m) **(Figure 5-1, Page 5-2 or Figure 5-2, Page 5-3)**.
4. Adjust the pedal group. Refer to the appropriate adjustment procedure:

- **For gasoline vehicles, see Pedal Group Adjustment – Gasoline Vehicles on page 5-11.**
- **For electric vehicles, see Pedal Group Adjustment – Electric Vehicles on page 5-16.**

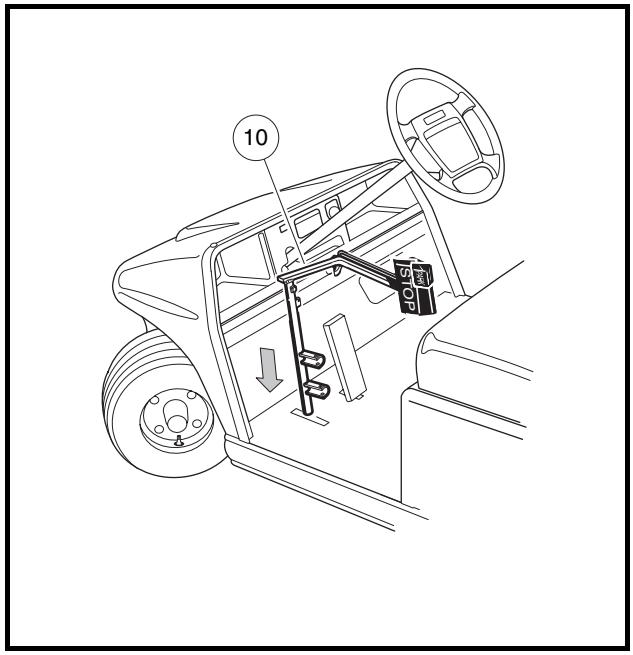

Figure 5-3 Brake Pedal Weldment Through Floor

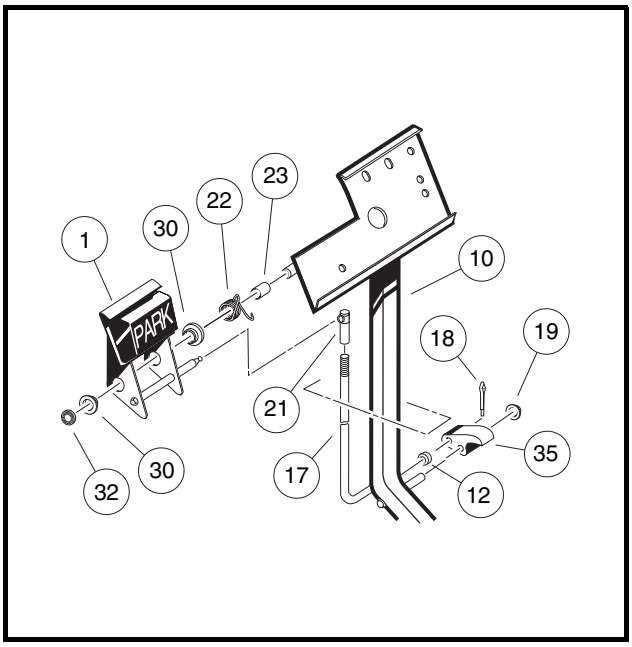

Figure 5-4 Park Brake Assembly

PARK BRAKE REMOVAL

1. Disconnect the battery cables as instructed. **See WARNING "To avoid unintentionally starting..." in General Warning, Section 1, Page 1-2.**
2. Place chocks under the rear wheels and lift the front end of the vehicle with a chain hoist or floor jack. Place jack stands under the front cross tube of the vehicle frame and lower the vehicle onto the jack stands. **See following WARNING.**

⚠ WARNING

- **Lift only one end of the vehicle at a time. Use a suitable lifting device (chain hoist or hydraulic floor jack) with 1000 lb. (454 kg) minimum lifting capacity. Do not use lifting device to hold vehicle in raised position. Use approved jack stands of proper weight capacity to support the vehicle and chock the wheels that remain on the floor. When not performing a test or service procedure that requires movement of the wheels, lock the brakes.**

3. Remove the park brake assembly.
   3.1. To remove the park brake rod and pawl assembly (17 through 20), remove the push nut (19) and disconnect the ball joint sleeve (21) from the park brake pedal (35) **(Figure 5-1, Page 5-2 and Figure 5-2, Page 5-3). See following NOTE.**

NOTE: *New push nuts (19) and (32) must be used when reassembling the park brake* ***(Figure 5-4, Page 5-4)****.*

   3.2. To remove the park brake pedal (1), remove the push retainer nut (32), disconnect the torsion spring (22) **(Figure 5-4, Page 5-4)** and slide the pedal off of the shaft. **See preceding NOTE.**
   3.3. Inspect all parts for wear and damage and replace as necessary.

PARK BRAKE INSTALLATION

1. From the bottom side of the floorboard, insert the park brake rod (17) through the brake pedal assembly opening as shown **(Figure 5-4, Page 5-4)**. Then install the park brake pawl (35) onto the shaft on the brake pedal assembly (10) and also insert the park brake rod (17) into the park brake pawl.
2. Install the push nut (19) on to the park brake pawl shaft.
3. Install the spacer (23) and torsion spring (22) on the park brake pedal shaft on the brake pedal assembly.
4. Install the two bushings (30) in the park brake pedal and position the park brake pedal on the shaft on the brake pedal assembly weldment (10) **(Figure 5-4, Page 5-4)**. Then attach the ends of the torsion spring to the park brake pedal and to the brake pedal weldment as shown **(Figure 5-5, Page 5-6)**.
5. Install the push nut (32) on the park brake pedal shaft **(Figure 5-4, Page 5-4)**.
6. Connect park brake rod (17) with ball joint (21) to the ball stud on the park brake pedal assembly **(Figure 5-4, Page 5-4)**.
7. Adjust the pedal group. Refer to the appropriate adjustment procedure:

- **For gasoline vehicles, see Pedal Group Adjustment – Gasoline Vehicles on page 5-11.**
- **For electric vehicles, see Pedal Group Adjustment – Electric Vehicles on page 5-16.**

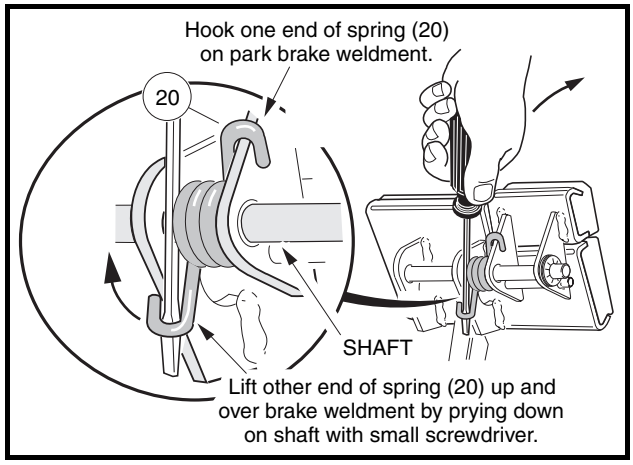

Figure 5-5 Torsion Spring Installation

ACCELERATOR PEDAL – GASOLINE VEHICLES

See General Warning, Section 1, Page 1-1.

ACCELERATOR PEDAL REMOVAL – GASOLINE VEHICLES

1. Disconnect the battery cables as instructed. **See WARNING "To avoid unintentionally starting..." in General Warning, Section 1, Page 1-2.**
2. Place chocks under the rear wheels and lift the front end of the vehicle with a chain hoist or floor jack. Place jack stands under the front cross tube of the vehicle frame and lower the vehicle onto the jack stands. **See following WARNING.**

⚠ WARNING

- **Lift only one end of the vehicle at a time. Use a suitable lifting device (chain hoist or hydraulic floor jack) with 1000 lb. (454 kg) minimum lifting capacity. Do not use lifting device to hold vehicle in raised position. Use approved jack stands of proper weight capacity to support the vehicle and chock the wheels that remain on the floor. When not performing a test or service procedure that requires movement of the wheels, lock the brakes.**

3. Disconnect the accelerator rod assembly (17, 25, and 24) **(Figure 5-6, Page 5-7)** at the front and rear ball studs and remove it from the vehicle.
4. Use a 9/16-inch socket and 9/16-inch wrench to remove the nut (7), two washers (5), and bolt (4) securing the accelerator pedal (1) to the pivot rod (6).
5. Remove the nut (10) and ball stud (8) from the accelerator pivot rod assembly (6).
6. Slide the spring retainer (11) off of the accelerator pivot rod.
7. Inspect the pivot support bearing (9) for wear and replace if necessary.
8. Use a marker to mark the position of the park brake ratchet (23) on the accelerator pivot rod (6)**. See following NOTE.**

NOTE: *Failure to mark position of the ratchet could cause it to be reinstalled improperly, resulting in improper adjustment and possible failure of the park brake.*

9. Remove the lock nut (26) from the accelerator pivot rod **(Figure 5-6, Page 5-7)**.
10. Press the brake pedal slightly and slide the park brake ratchet (23) toward the end of the accelerator pivot rod. Rotate the ratchet and remove it from the pivot rod.
11. Remove the pivot rod (6) and spacer (20) from the accelerator pivot rod supports (21).
12. Inspect the accelerator pivot rod supports (21) for wear and damage and replace if necessary. If the pivot rod supports do not require replacement, loosen, but do not remove, the four bolts (22) and lock nuts (18) to make installation of the pivot rod easier.
13. Remove the accelerator pedal (1) from the vehicle.
14. Inspect all parts for wear and damage. Replace as necessary.

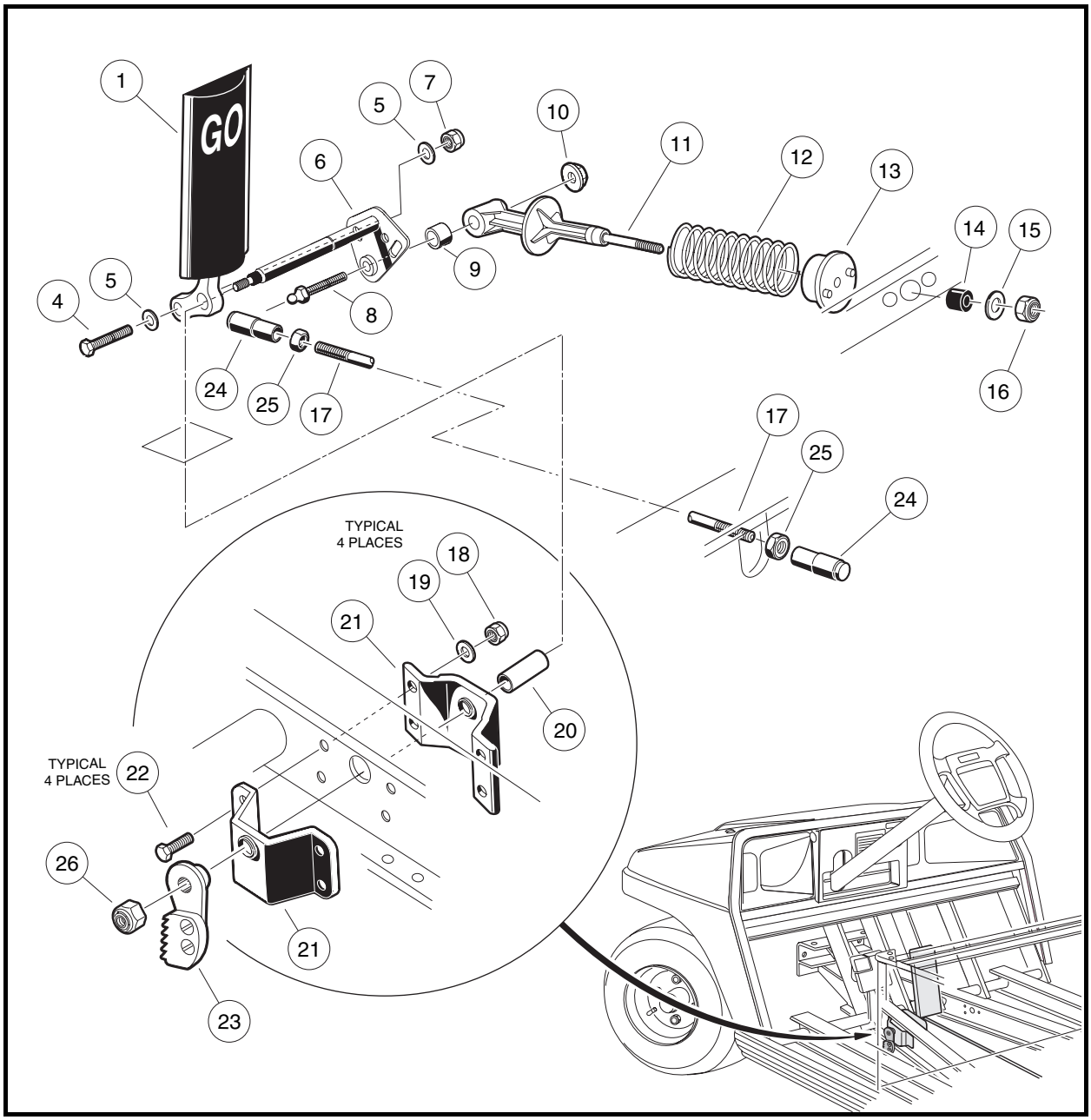

Figure 5-6 Accelerator Pedal – Gasoline Vehicles

ACCELERATOR PEDAL INSTALLATION – GASOLINE VEHICLES

1. If the accelerator pivot rod supports were replaced, position the supports (21) on the vehicle frame and install the four bolts (22), flat washers (19), and lock nuts (18). Finger-tighten nuts at this time **(Figure 5-6, Page 5-7)**.
2. Insert the lower end of the accelerator pedal (1) through the floorboard and install the accelerator pivot rod (6) through the uppermost hole in the pedal.
3. Install the plastic spacer (20) on the pivot rod (6).
4. Insert the pivot rod through the pivot rod supports on the vehicle frame.
5. Tighten the four bolts (22) attaching the pivot rod supports to the frame to 75 in-lb (8.5 N·m).
6. Install the bolt (4), two washers (5), and a new lock nut (7) through the lower hole in the pedal and through the pivot rod. Finger-tighten nut at this time.
7. Install the ball stud (8) through the pivot rod. Install the spring retainer (11) onto the ball stud. Secure these parts with the nut (10) **(Figure 5-6, Page 5-7)**. Tighten the nut to 50 in-lb (5.7 N·m).
8. Press the brake pedal slightly, and with the park brake ratchet oriented so that the tip of the ratchet is pointed toward the rear of vehicle, slide the ratchet onto the pivot rod (do not slide the ratchet onto the pivot rod splines). Release the brake pedal and allow the ratchet to rotate until its tip is pointed downward **(Figure 5-7, Page 5-8)**. The ratchet should now rotate freely on the rod.

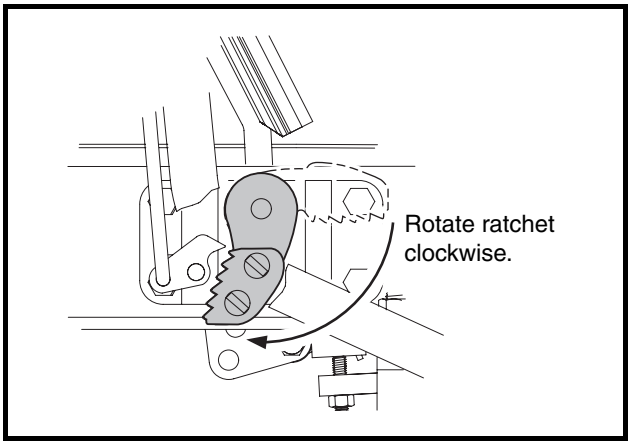

Figure 5-7 Ratchet Installation

9. Rotate the ratchet clockwise until it touches the park brake pawl, then slide the ratchet onto the splines of the pivot rod (it may be necessary to push the pivot rod toward the driver side of the vehicle to make the splines accessible). The ratchet may have to be rotated counterclockwise slightly to align the splines.
10. Move the pivot rod back toward the driver side of the vehicle and line up the match marks on the pivot rod and ratchet. Rotate the pivot rod back and forth slightly to align the splines and slide the ratchet onto the splines.
11. Install the nylon lock nut (26) on the pivot rod and tighten the nut to 18 ft-lb (24 N·m) **(Figure 5-6, Page 5-7)**.
12. Install the accelerator rod assembly (17, 25, and 24) **(Figure 5-6, Page 5-7)**.
13. Adjust the pedal group. **See Pedal Group Adjustment – Gasoline Vehicles on page 5-11.**

ACCELERATOR PEDAL – ELECTRIC VEHICLES

See General Warning, Section 1, Page 1-1.

ACCELERATOR PEDAL REMOVAL – ELECTRIC VEHICLES

1. Disconnect the battery cables as instructed. **See WARNING "To avoid unintentionally starting..." in General Warning, Section 1, Page 1-2.**
2. Place chocks under the rear wheels and lift the front end of the vehicle with a chain hoist or floor jack. Place jack stands under the front cross tube of the vehicle frame and lower the vehicle onto the jack stands. **See following WARNING.**

⚠ WARNING

- **Lift only one end of the vehicle at a time. Use a suitable lifting device (chain hoist or hydraulic floor jack) with 1000 lb. (454 kg) minimum lifting capacity. Do not use lifting device to hold vehicle in raised position. Use approved jack stands of proper weight capacity to support the vehicle and chock the wheels that remain on the floor. When not performing a test or service procedure that requires movement of the wheels, lock the brakes.**

3. Remove the MCOR (2) and drive bar (3) as instructed **(Figure 5-8, Page 5-10)**. **See MCOR Removal, Section 12, in the appropriate maintenance and service supplement.**
4. Use a 9/16-inch socket and 9/16-inch wrench to remove the nut (7), two washers (5), and bolt (4) securing the accelerator pedal (1) to the pivot rod (6) **(Figure 5-8, Page 5-10).**
5. Remove the nut (10) and bolt (8) from the accelerator pivot rod assembly (6).
6. Slide the spring retainer (11) off of the accelerator pivot rod.
7. Inspect the pivot support bearing (9) for wear and replace if necessary.
8. Use a marker to mark the position of the park brake ratchet (24) on the accelerator pivot rod (6). **See following NOTE.**

NOTE: *Failure to mark position of the ratchet could cause it to be installed improperly, resulting in improper adjustment and possible failure of the park brake.*

9. Remove the lock nut (23) from the accelerator pivot rod.
10. Press the brake pedal slightly and slide the park brake ratchet (24) toward the end of the accelerator pivot rod. Rotate the ratchet and remove it from the pivot rod.
11. Remove the pivot rod (6) and spacer (20) from the accelerator pivot rod supports (21) **(Figure 5-8, Page 5-10)**.
12. Inspect the accelerator pivot rod supports (21) for wear and damage and replace as necessary. If the pivot rod supports do not require replacement, loosen, but do not remove, the four bolts (22) and lock nuts (15) to make installation of the pivot rod easier.
13. Remove the accelerator pedal (1) from the vehicle **(Figure 5-8, Page 5-10)**.
14. Inspect all parts for wear and damage. Replace as necessary.

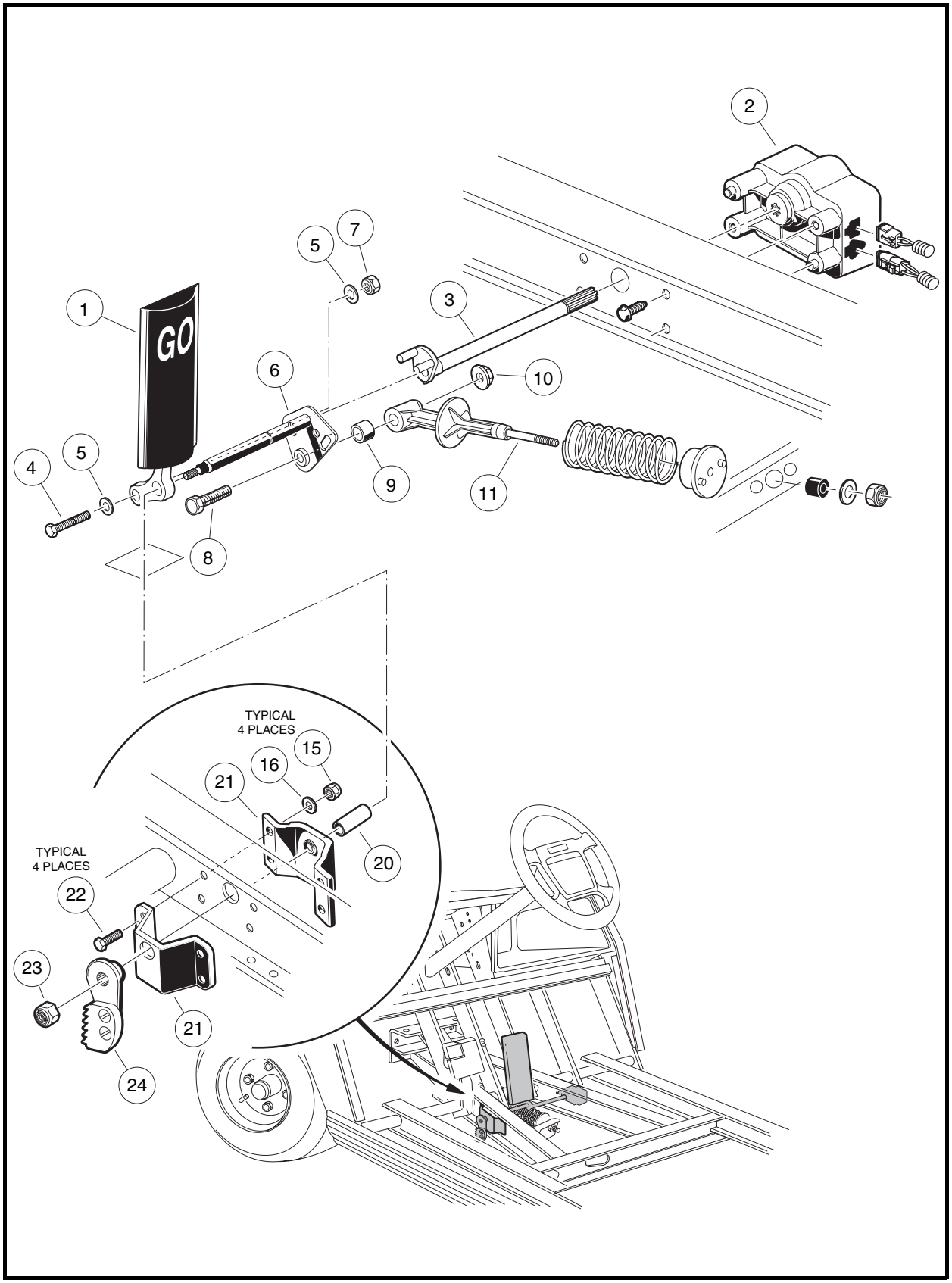

Figure 5-8 Accelerator Pedal – Electric Vehicle

ACCELERATOR PEDAL INSTALLATION – ELECTRIC VEHICLES

1. If the accelerator pivot rod supports were replaced, position the supports (21) on the vehicle frame and install the four bolts (22), flat washers (16), and lock nuts (15) **(Figure 5-8, Page 5-10)**. Finger-tighten nuts at this time.
2. Insert the lower end of the accelerator pedal (1) through the floorboard and install the accelerator pivot rod (6) through the uppermost hole in the pedal.
3. Install plastic spacer (20) on pivot rod (6).
4. Insert the pivot rod through the pivot rod supports (21) on the vehicle frame.
5. Tighten the four bolts (22) attaching the pivot rod supports to the frame to 75 in-lb (8.5 N·m) **(Figure 5-8, Page 5-10)**.
6. Insert the bolt (4), two washers (5), and a new lock nut (7) through the lower hole in the pedal and through the pivot rod. Finger-tighten lock nut at this time.
7. Install the bolt (8) through the pivot rod (6) and spring retainer (11). Secure these parts with the nut (10) **(Figure 5-8, Page 5-10)**. Tighten the nut to 50 in-lb (5.5 N·m).
8. Press the brake pedal slightly, and with the park brake ratchet oriented so that the tip of the ratchet is pointed toward the rear of the vehicle, slide the ratchet onto the pivot rod (do not slide the ratchet onto the pivot rod splines). Release the brake pedal and allow the ratchet to rotate until its tip is pointed downward **(Figure 5-7, Page 5-8)**. The ratchet should now rotate freely on the rod.
9. Rotate the ratchet clockwise until it touches the park brake pawl, then slide the ratchet onto the splines of the pivot rod (it may be necessary to push the pivot rod toward the driver side of the vehicle to make the splines accessible). The ratchet may have to be rotated counterclockwise slightly to align the splines.
10. Move the pivot rod back toward the driver side of the vehicle and line up the match marks on the pivot rod and ratchet. Rotate the pivot rod back and forth slightly to align the splines and slide the ratchet onto the splines.
11. Install lock nut (23) on pivot rod **(Figure 5-8, Page 5-10)**. Tighten to 18 ft-lb (24.5 N·m).
12. Install the MCOR (2) and drive bar (3) as instructed. **See MCOR Removal, Section 12, in the Power-Drive Maintenance and Service Supplement.**
13. Adjust the pedal group. **See Pedal Group Adjustment – Electric Vehicles on page 5-16.**

PEDAL GROUP ADJUSTMENT – GASOLINE VEHICLES

See General Warning, Section 1, Page 1-1.

1. Disconnect the battery cables as instructed. **See WARNING "To avoid unintentionally starting..." in General Warning, Section 1, Page 1-2.**
2. Adjust brake pedal height.
   - 2.1. Chock wheels and release park brake. Lift rear of vehicle and place jack stands under the axle tubes to support the vehicle.
   - 2.2. To provide slack in the brake cables, loosen the equalizer retaining nuts (2 and 3) on the equalizer rod (1) **(Figure 5-9, Page 5-12).**
   - 2.3. **Four-wheel brake vehicles only:** Loosen the front brake equalizer rod **(Figure 5-10, Page 5-12)**.

Pedal Group Adjustment – Gasoline Vehicles, Continued:

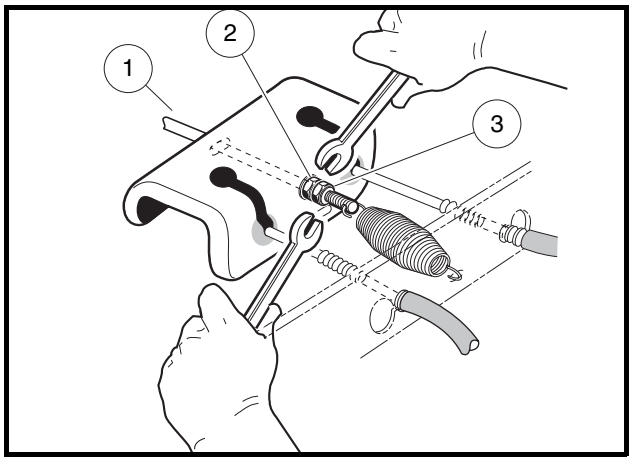

Figure 5-9 Loosen Rear Brake Equalizer Rod Nuts

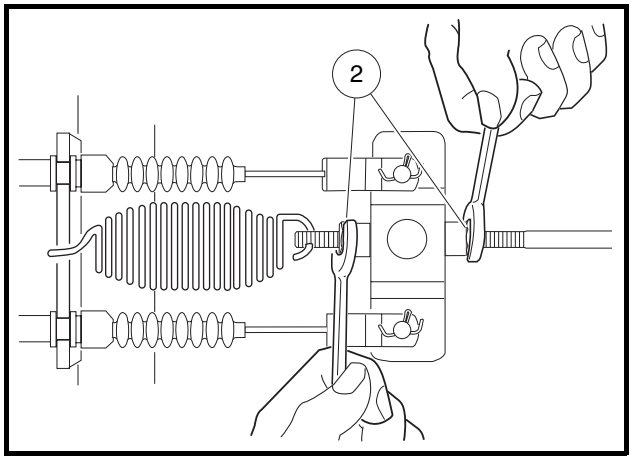

Figure 5-10 Loosen Front Brake Equalizer Rod Nuts

2.4. Loosen the brake stop jam nut (31), then relieve pedal pressure on the stop by pushing down slightly on the pedal. Next, adjust the brake stop bumper (22) up or down **(Figure 5-11, Page 5-12)**. Adjusting the bumper upward decreases distance between pedal and floorboard. Adjusting the bumper downward increases distance between pedal and floorboard. Proper brake pedal height is 6 inches (15.2 cm) **(Figure 5-12, Page 5-12)**.

2.5. Tighten the jam nut (31) to 8 ft-lb (9.5 N·m) **(Figure 5-11, Page 5-12)**.

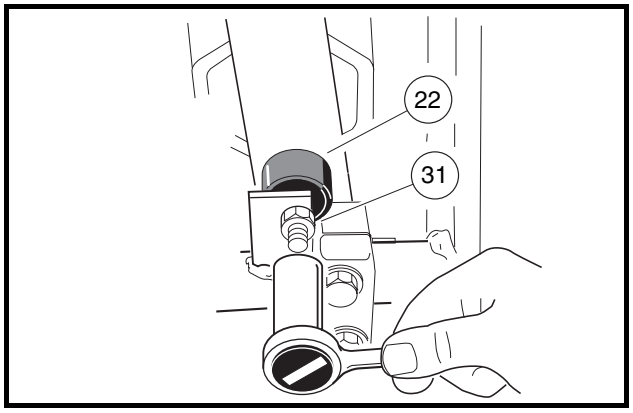

Figure 5-11 Brake Pedal Height Adjustment

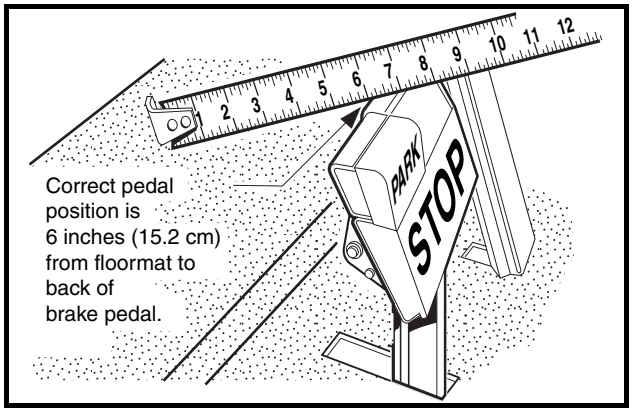

Figure 5-12 Brake Pedal Height Measurement

3. Adjust park brake ratchet/pawl gap and pawl engagement.

3.1. Inspect the park brake pawl and ratchet for excessive wear, grooves, cracks, or chips. If either the pawl or ratchet is damaged, both must be replaced.

3.2. Adjust retaining nut (7) on spring support rod until there is a 0.060 inch (1.5 mm) gap between the pawl and the tips of the ratchet teeth. Use a feeler gauge to verify the gap **(Figure 5-13, Page 5-13)**. The gap should be consistent through range of pawl movement. If the gap is not consistent, loosen the four bolts (6) securing the accelerator pivot rod supports and adjust the supports. If the gap becomes smaller as the park brake pedal is pressed, move the pivot rod supports slightly rearward until the gap is consistent. If the gap becomes larger as the park brake pedal is pressed, move the pivot rod supports slightly forward until gap is consistent. **See following NOTE**.

NOTE: *The accelerator rod must also be checked if the ratchet/pawl gap is adjusted.* ***See step 5 of Pedal Group Adjustment – Gasoline Vehicles on page 5-14.***

The accelerator rod must be disconnected before proceeding to step 3.3.

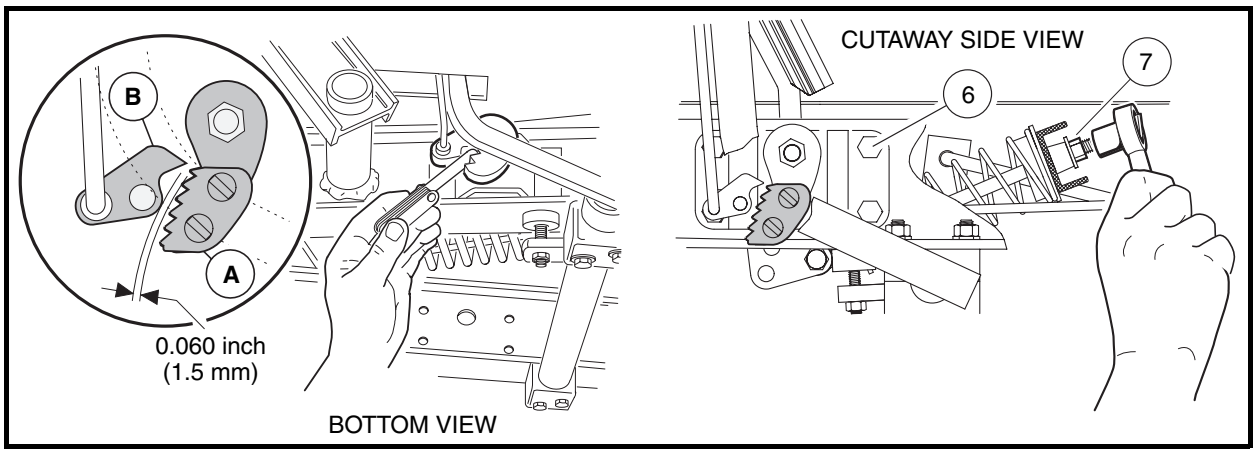

Figure 5-13 Park Brake Ratchet/Pawl Gap Adjustment

3.3. With the park brake unlocked, measure and note the distance from the top of the accelerator pedal to the floorboard, then lock the park brake **(Figure 5-14, Page 5-13)**.

3.4. With the park brake locked, make sure at least 75% of ratchet tooth length engages the pawl **(Figure 5-15, Page 5-13)**. Tooth engagement should be between the two lines marked on the pawl.

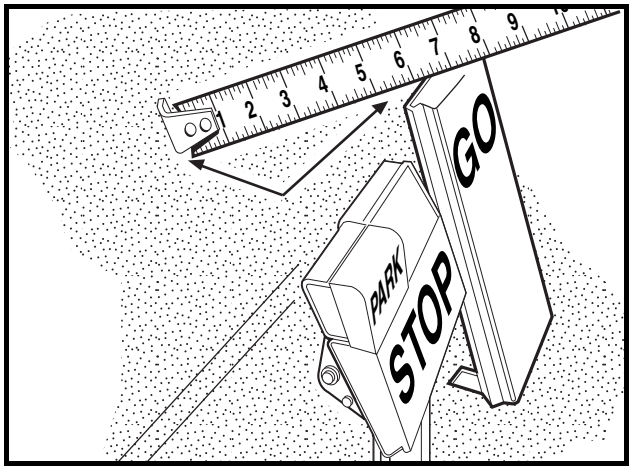

Figure 5-14 Accelerator Pedal Height Measurement

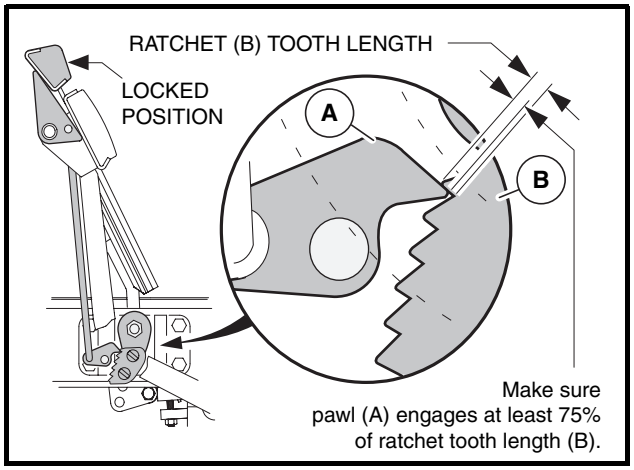

Figure 5-15 Ratchet/Pawl Tooth Engagement

3.5. With park brake still locked, measure the distance from the top of accelerator pedal to floorboard. If the measurement has changed, ratchet tooth engagement is too deep and must be adjusted.

3.6. If ratchet/pawl engagement must be adjusted, disconnect the ball joint at the top of the brake rod and rotate the ball joint sleeve clockwise to increase engagement or counterclockwise to decrease engagement. Reconnect ball joint **(Figure 5-16, Page 5-14)**.

3.7. If the accelerator push rod was disconnected from the accelerator pedal, reconnect it.

3.8. Check for proper brake operation prior to driving the vehicle.

Pedal Group Adjustment – Gasoline Vehicles, Continued:

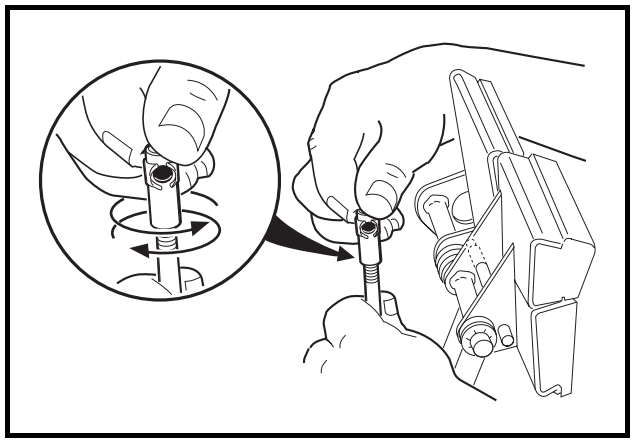

Figure 5-16 Brake Rod Adjustment

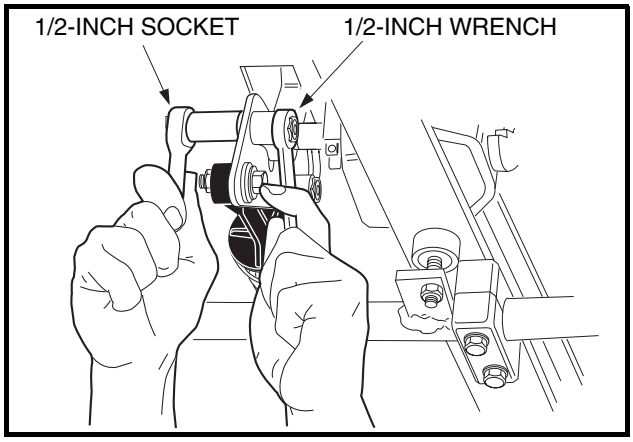

Figure 5-17 Accelerator Pedal Height Adjustment

4. Adjust accelerator pedal height.
   4.1. Loosen the nut and bolt **(Figure 5-17, Page 5-14)** securing the accelerator pedal to the pivot plate. Clamp the accelerator pedal adjustment tool (CCI P/N 101871001) to the accelerator pedal, with the end marked *accelerator pedal height* closest to the floorboard. Press the accelerator pedal until the end of the tool rests against the floorboard; pedal height should be 5-5/8 inches (14.3 cm). Use a rubber strap to hold pedal in position against the floorboard and then tighten nut to 26 ft-lb (35.3 N·m) **(Figure 5-18, Page 5-14)**.

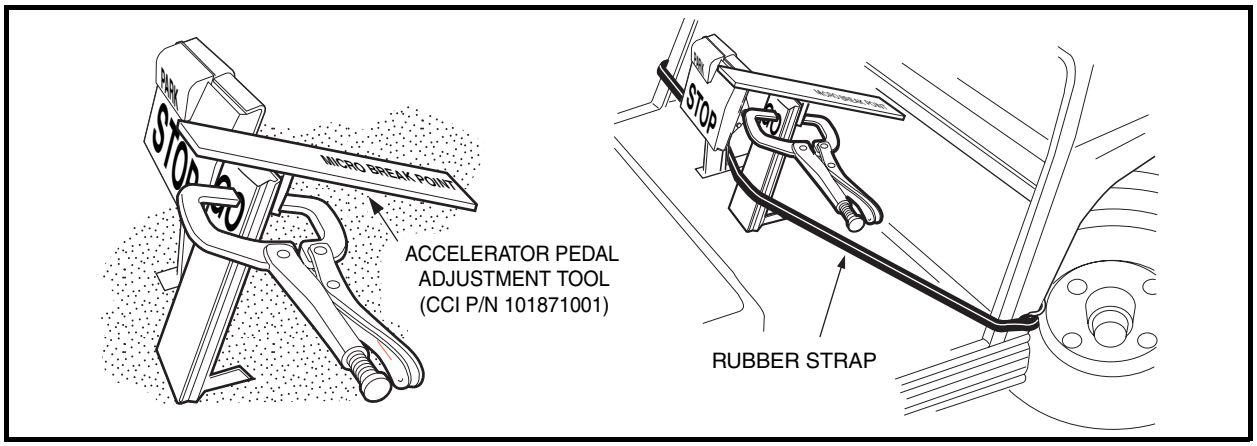

Figure 5-18 Accelerator Pedal Height Adjustment

5. Adjust the accelerator rod. **See following DANGER.**

⚠ DANGER

- **Before servicing, turn the key switch to the OFF position and place the Forward/Reverse handle in the NEUTRAL position.**
- **To prevent accidentally starting the vehicle, disconnect the battery cables as instructed in WARNING "To avoid unintentionally starting..." in General Warning, Section 1, Page 1-2. This will prevent the possibility of the vehicle running over you when you are adjusting the accelerator rod.**

5.1. Remove the electrical box screw and cover. **See preceding DANGER.**

5.2. Loosen the jam nuts (25) and disconnect the accelerator rod (17) at the accelerator pedal **(Figure 5-6, Page 5-7)**. Adjust the length of the rod so the indicated cam edge is parallel with the edge of the electrical component box as shown **(Figure 5-19, Page 5-15). See following CAUTION.**

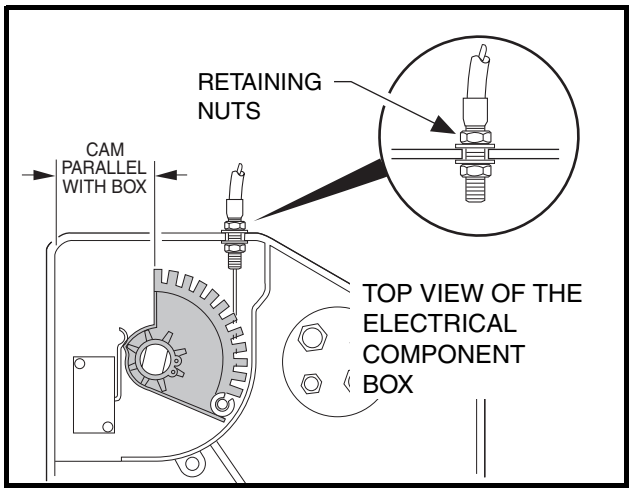

Figure 5-19 Accelerator Cable

⚠ CAUTION

- **After accelerator rod adjustment, make sure that approximately the same number of threads are exposed at each end of the accelerator rod.**
- **If the lever on the limit switch in the electrical box is bent, replace the limit switch.**
- **When loosening jam nuts on the accelerator rod with one end disconnected, hold the disconnected accelerator rod with locking pliers.**
- **When tightening jam nuts on the accelerator rod, hold the disconnected ball joint with locking pliers.**

5.3. Reconnect the accelerator rod at the accelerator pedal.

5.4. Before tightening jam nuts on accelerator rod, set park brake to first ratchet and pawl position. Press accelerator pedal and make sure the following events occur in the ***exact order shown***:

EVENT	APPROXIMATE PEDAL TRAVEL
Park brake release	2°-4°
Solenoid activation	4°-8°
Carburetor throttle actuation	8°-12°

5.5. If the events above occur as they should, hold the ball joint at each end of the accelerator rod with pliers and tighten the accelerator rod jam nut against it.

5.6. Ensure that the events occur as described in step 5.4 above. **See following NOTE.**

Pedal Group Adjustment – Gasoline Vehicles, Continued:

NOTE: *After the pedal group and accelerator rod are adjusted, the final governed engine RPM should be set.* ***See Engine RPM Adjustment in Section 14 of the appropriate maintenance and service supplement.***

5.7. Install the electrical box cover and screw.

6. Adjust the brakes. **See Brake Adjustment (Self-Adjusting Brakes), Section 6, Page 6-8 or Brake Adjustment (Manually-Adjusted Brakes), Section 6, Page 6-12.**

PEDAL GROUP ADJUSTMENT – ELECTRIC VEHICLES

See General Warning, Section 1, Page 1-1.

1. Disconnect the battery cables as instructed. **See WARNING "To avoid unintentionally starting..." in General Warning, Section 1, Page 1-2.**

2. Adjust brake pedal height.

   2.1. Chock wheels and release park brake. Lift rear of vehicle and place jack stands under the axle tubes to support the vehicle.

   2.2. To provide slack in the brake cables, loosen the equalizer retaining nuts (2 and 3) on the equalizer rod (1) **(Figure 5-20, Page 5-16).**

   2.3. **Four-wheel brake vehicles only:** Loosen the front brake equalizer rod **(Figure 5-21, Page 5-16)**.

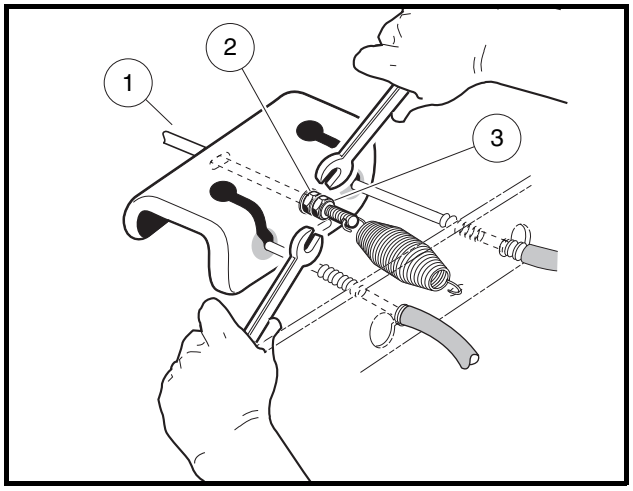

Figure 5-20 Loosen Rear Brake Equalizer Rod Nuts

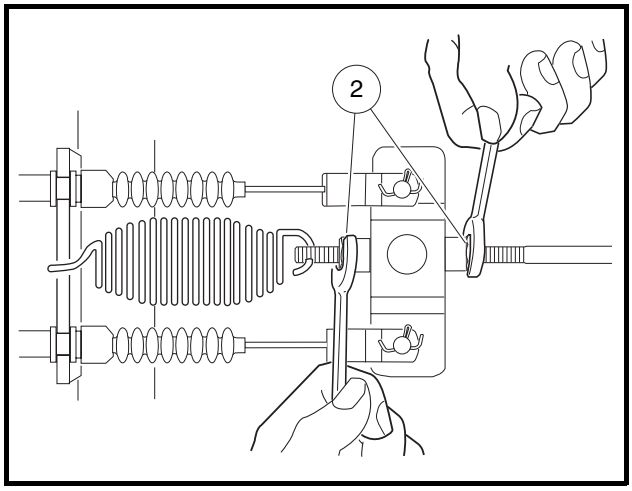

Figure 5-21 Loosen Front Brake Equalizer Rod Nuts

   2.4. Loosen the brake stop jam nut (31), then relieve pedal pressure on the stop by pushing down slightly on the pedal. Next, adjust the brake stop bumper (22) up or down **(Figure 5-22, Page 5-17)**. Adjusting the bumper upward decreases distance between pedal and floorboard. Adjusting the bumper downward increases distance between pedal and floorboard. Proper brake pedal height is 6 inches (15.2 cm) **(Figure 5-23, Page 5-17)**.

   2.5. Tighten the jam nut (31) to 8 ft-lb (9.5 N·m) **(Figure 5-22, Page 5-17)**.

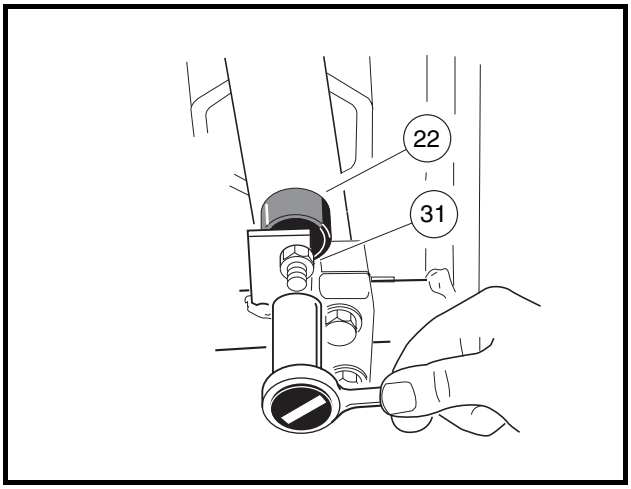

Figure 5-22 Brake Pedal Height Adjustment

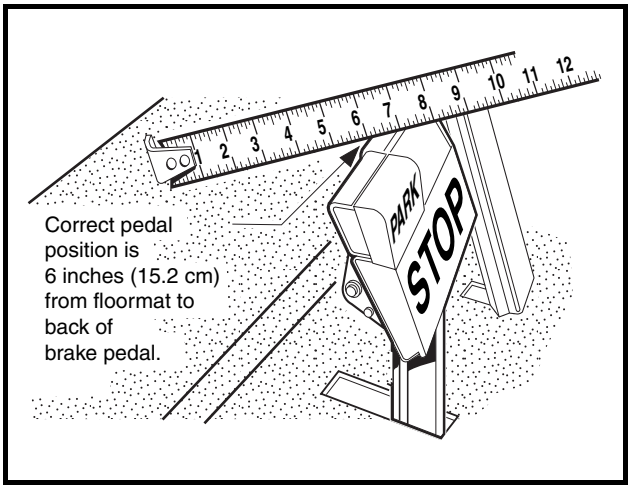

Figure 5-23 Brake Pedal Height Measurement

3. Adjust park brake ratchet/pawl gap and pawl engagement.

   3.1. Inspect the park brake pawl and ratchet for excessive wear, grooves, cracks, or chips. If either the pawl or ratchet is damaged, both must be replaced.

   3.2. Adjust retaining nut (7) on spring support rod until there is a 0.060 inch (1.5 mm) gap between the pawl and the tips of the ratchet teeth. Use a feeler gauge to verify the gap **(Figure 5-24, Page 5-17)**. The gap should be consistent through range of pawl movement. If the gap is not consistent, loosen the four bolts (6) securing the accelerator pivot rod supports and adjust the supports. If the gap becomes smaller as the park brake pedal is pressed, move the pivot rod supports slightly rearward until the gap is consistent. If the gap becomes larger as the park brake pedal is pressed, move the pivot rod supports slightly forward until gap is consistent.

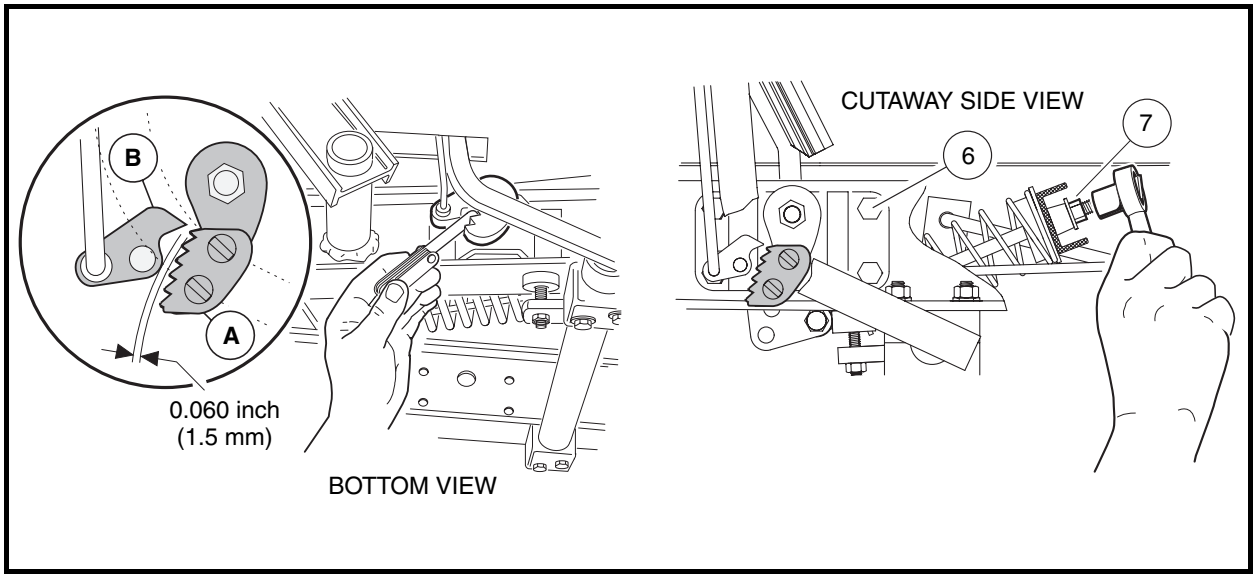

Figure 5-24 Park Brake Ratchet/Pawl Gap Adjustment

   3.3. With the park brake unlocked, measure and note the distance from the top of the accelerator pedal to the floorboard, then lock the park brake **(Figure 5-25, Page 5-18)**.

Pedal Group Adjustment – Electric Vehicles, Continued:

3.4. With the park brake locked, make sure at least 75% of ratchet tooth length engages the pawl **(Figure 5-26, Page 5-18)**. Tooth engagement should be between the two lines marked on the pawl.

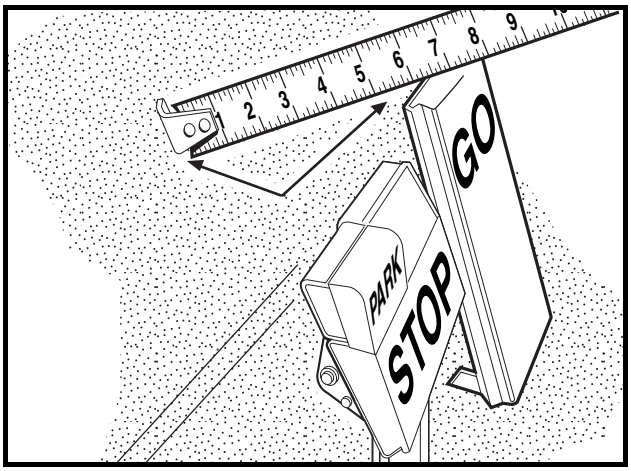

Figure 5-25 Accelerator Pedal Height Measurement

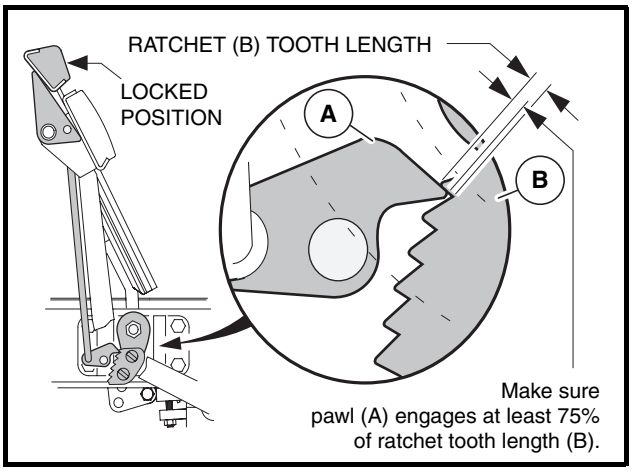

Figure 5-26 Ratchet/Pawl Tooth Engagement

3.5. With park brake still locked, measure the distance from the top of accelerator pedal to floorboard. If the measurement has changed, ratchet tooth engagement is too deep and must be adjusted.

3.6. If ratchet/pawl engagement must be adjusted, disconnect the ball joint at the top of the brake rod and rotate the ball joint sleeve clockwise to increase engagement or counterclockwise to decrease engagement. Reconnect ball joint **(Figure 5-27, Page 5-18)**.

3.7. Check for proper brake operation prior to driving the vehicle.

4. Adjust accelerator pedal height.

4.1. Loosen the nut and bolt **(Figure 5-28, Page 5-18)** securing the accelerator pedal to the pivot plate. Clamp the accelerator pedal adjustment tool (CCI P/N 101871001) to the accelerator pedal, with the end marked *accelerator pedal height* closest to the floorboard. Press the accelerator pedal until the end of the tool rests against the floorboard; pedal height should be 5-5/8 inches (14.3 cm). Use a rubber strap to hold pedal in position against the floorboard and then tighten nut to 26 ft-lb (35.3 N·m) **(Figure 5-29, Page 5-19)**.

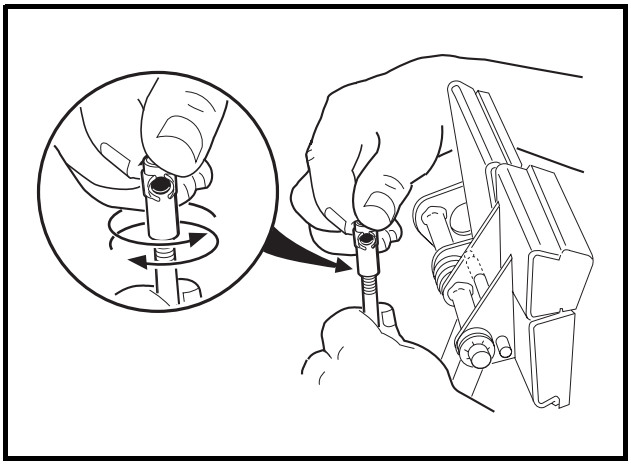

Figure 5-27 Brake Rod Adjustment

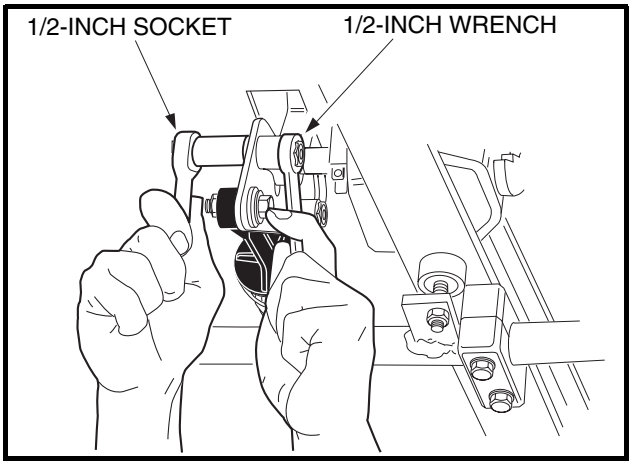

Figure 5-28 Accelerator Pedal Height Adjustment

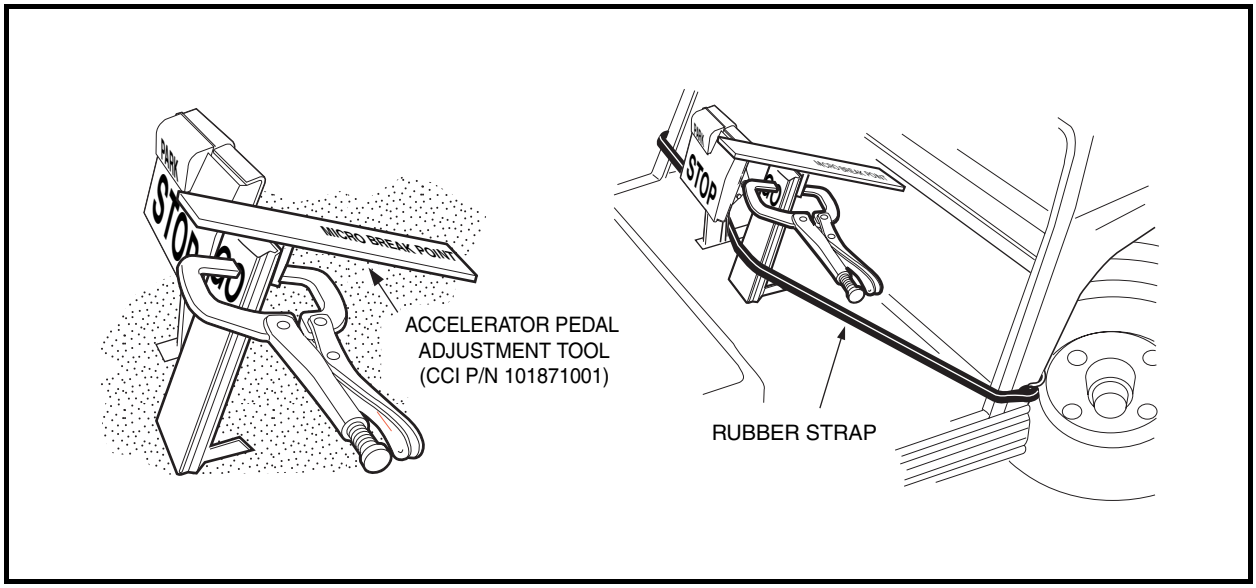

Figure 5-29 Accelerator Pedal Height Adjustment

5. Adjust the brakes. **See Brake Adjustment (Self-Adjusting Brakes), Section 6, Page 6-8 or Brake Adjustment (Manually-Adjusted Brakes), Section 6, Page 6-12.**

SECTION 6 – WHEEL BRAKE ASSEMBLIES

⚠ DANGER

- **See General Warning, Section 1, Page 1-1.**

⚠ WARNING

- **See General Warning, Section 1, Page 1-1.**
- **Some aftermarket brake shoes contain asbestos fiber, and asbestos dust is created when these brake mechanisms are handled. Wear approved eye and respiratory protection when disassembling and cleaning brake mechanisms. Inhalation of asbestos could result in severe personal injury or death. Do not use compressed air or aerosol sprays to clean the brake mechanism. Clean brake mechanism using the negative pressure enclosure/hepa vacuum system or low pressure/wet cleaning method per OSHA/29 CFR - 1910.1001.**

GENERAL INFORMATION

The Club Car vehicles covered in this manual are equipped with two-wheel self-adjusting brakes or four-wheel manually-adjusted brakes. **See Section 2 – Specifications.**

BRAKE SHOE REMOVAL

See General Warning, Section 1, Page 1-1. See also Warning, on Page 6-1.

1. To remove rear brake shoes, place chocks at the front wheels, loosen the rear wheel lug nuts, and lift the rear of the vehicle with a chain hoist or floor jack. Place jack stands under the axle tubes to support the vehicle.
2. Release park brake if latched and loosen equalizer retaining nuts (1) on equalizer rod (2) to slightly loosen brake cable **(Figure 6-1, Page 6-1)**.

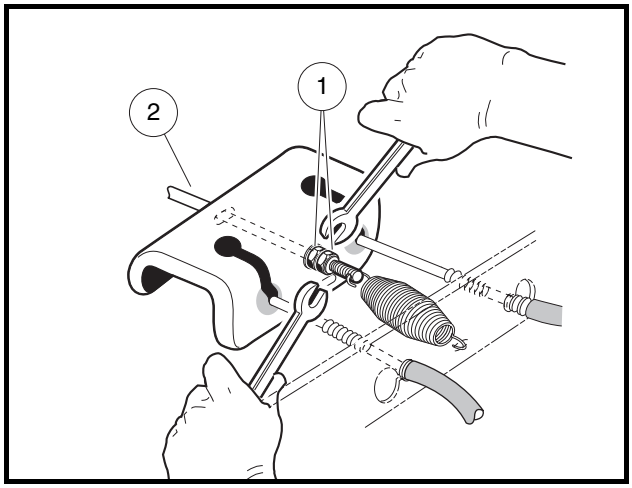

Figure 6-1 Loosen Equalizer Nut

Brake Shoe Removal, Continued:

3. Remove the rear wheels and remove the brake drums. If the brake drums were easily removed, proceed to step 5. **See following CAUTION and NOTE.**

⚠ CAUTION

- **Worn or damaged brake drums cannot be machined to refinish them. Replace as necessary.**

NOTE: *When servicing vehicles with self-adjusting brakes with badly worn brake shoes and when the drums cannot be removed by normal methods, proceed to step 4 to minimize damage to the brake cluster and brake components.*

4. Removing brake drums with badly worn brake shoes.
   - 4.1. On the back of each brake cluster assembly, locate the heads of two brake shoe retaining pins. It may be necessary to remove sealant material around the head of each pin.
   - 4.2. Insert a 1/2 x 5/8-inch cold chisel under the head of each pin and shear them off as illustrated **(Figure 6-2, Page 6-2)**. This will release the shoes from the backing plate, allowing them to pivot away from the inside of the brake drum and allow the brake drum to be pulled free. After completing step 5, skip step 6.
5. Remove the axle.
   - 5.1. Using 90° snap ring pliers (CCI P/N 1012560), remove axle retaining ring (1) **(Figure 6-3, Page 6-2)**.
   - 5.2. Pull the axle shaft (2) from the axle tube **(Figure 6-3, Page 6-2)**.

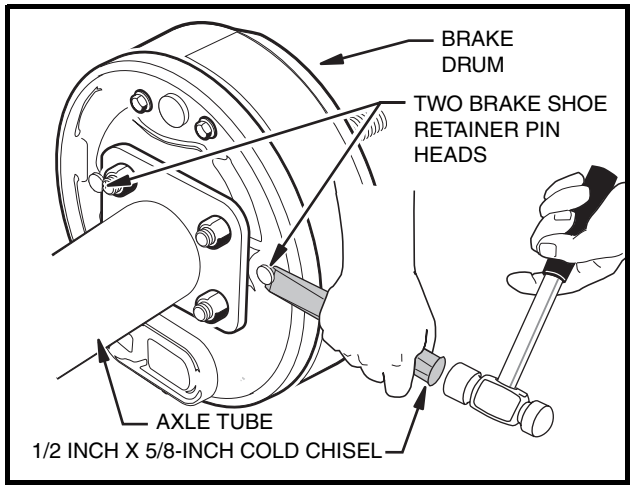

Figure 6-2 Shoe Retainer Pins

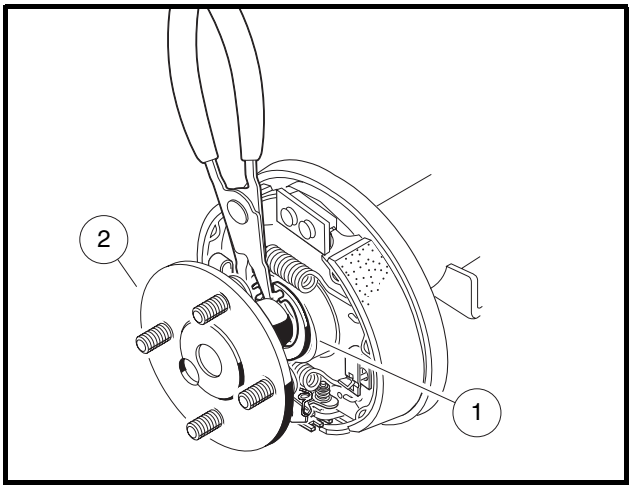

Figure 6-3 Remove Axle Retaining Ring

6. Using needle nose pliers, rotate the clip retainer pin (1) 90° to remove the shoe retainer clip (2) on each shoe **(Figure 6-4, Page 6-3)**. **See following CAUTION.**

⚠ CAUTION

- **The brake shoes are under spring pressure and can release suddenly when brake shoe retainers are removed.**

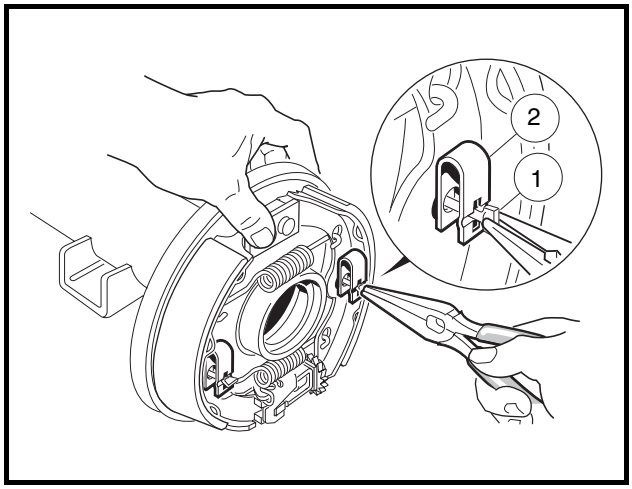

Figure 6-4 Rotate Clip Retainer

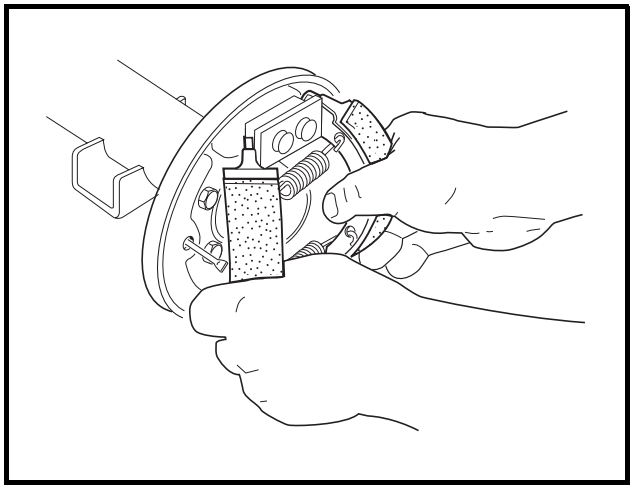

Figure 6-5 Remove Shoes

7. Grasp both brake shoes and pull them, with the springs, out of brake assembly **(Figure 6-5, Page 6-3)**.
8. **Self-adjusting brake vehicles only:** Remove the adjuster wheel (1) with two washers (2 and 3) from the backing plate **(Figure 6-6, Page 6-3).**

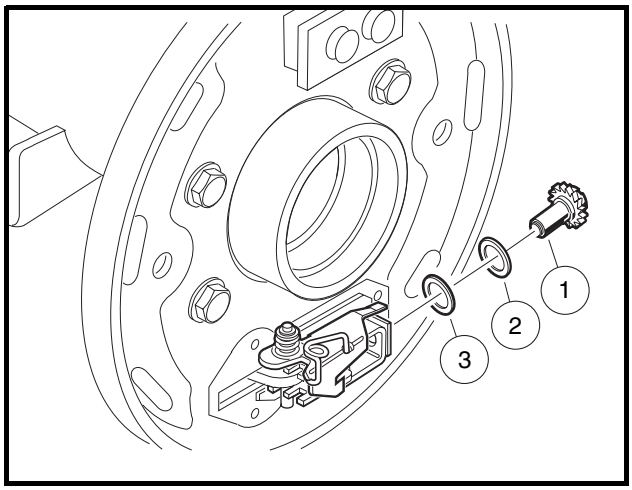

Figure 6-6 Remove Adjuster Wheel

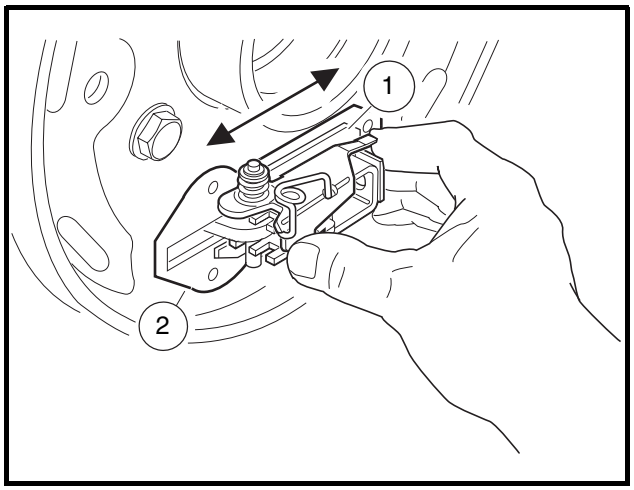

Figure 6-7 Lubricate Slide

BRAKE ASSEMBLY CLEANING (SELF-ADJUSTING BRAKES)

See General Warning, Section 1, Page 1-1. See also Warning, on Page 6-1.

1. Carefully clean the brake backing plate and all of its mechanical components.
2. Remove the rubber boot from backing plate and wipe with a clean damp cloth.
3. Lubricate the slide (1) and slide plate (2) with dry moly lubricant (CCI P/N 1012151) on both sides of the backing plate. After lubricating, work the slide back and forth to ensure it slides smoothly and easily **(Figure 6-7, Page 6-3)**. Reinstall rubber boot onto backing plate. **See following WARNING.**

Brake Assembly Cleaning (Self-Adjusting Brakes), Continued:

⚠ WARNING

- **Apply grease carefully when performing the following steps. Do not allow any grease to get on the friction surfaces of the brake shoe pads. Failure to heed this warning could cause diminished brake performance, possibly resulting in property damage or severe personal injury.**

4. Use a small brush to carefully apply a light coat of white lithium NLGI #2 grease (Dow Corning® BR2-Plus or equivalent) on each of the six raised bosses on brake backing plate **(Figure 6-8, Page 6-4)**. **See preceding WARNING.**
5. Use a small brush to carefully apply a light coat of white lithium NLGI #2 grease (Dow Corning BR2-Plus or equivalent) to each end of both brake shoes and into the slots in the brake shoe mounting block as shown **(Figure 6-9, Page 6-4). See preceding WARNING**.

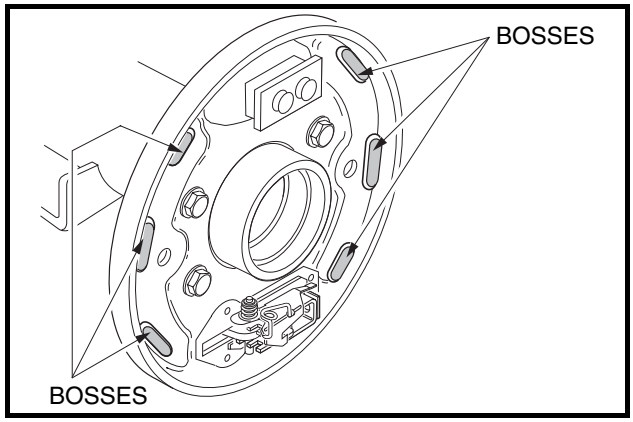

Figure 6-8 Lubricate Raised Bosses

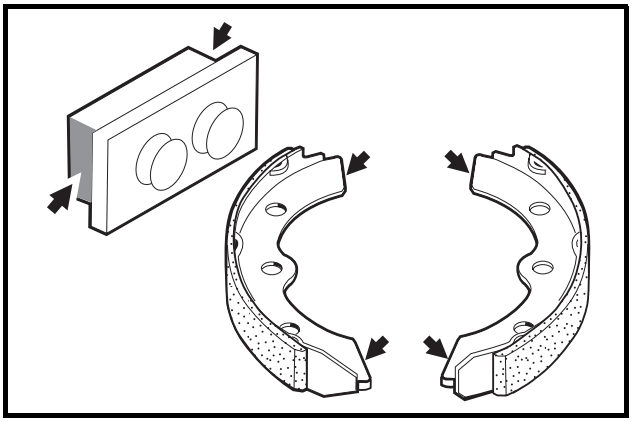

Figure 6-9 Lubricate Shoes

6. Use a small brush to carefully apply a light coat of white lithium NLGI #2 grease (Dow Corning BR2-Plus or equivalent) to the brake adjuster assembly, adjuster wheel shoe slots, and the shaft of the adjuster wheel as shown **(Figure 6-10, Page 6-4)**. **See preceding WARNING**.
7. Install the adjuster wheel and two washers into the adjuster assembly **(Figure 6-10, Page 6-4)**.

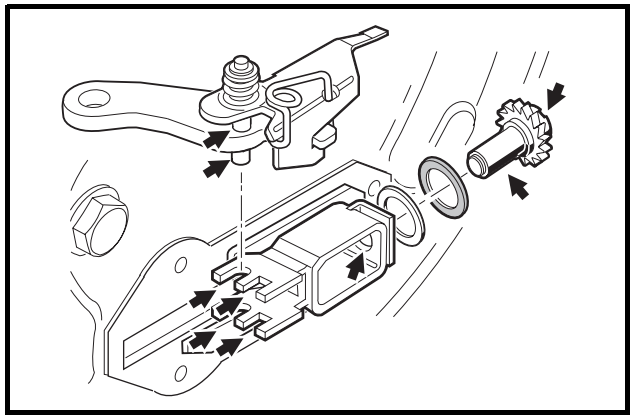

Figure 6-10 Lubricate Adjuster

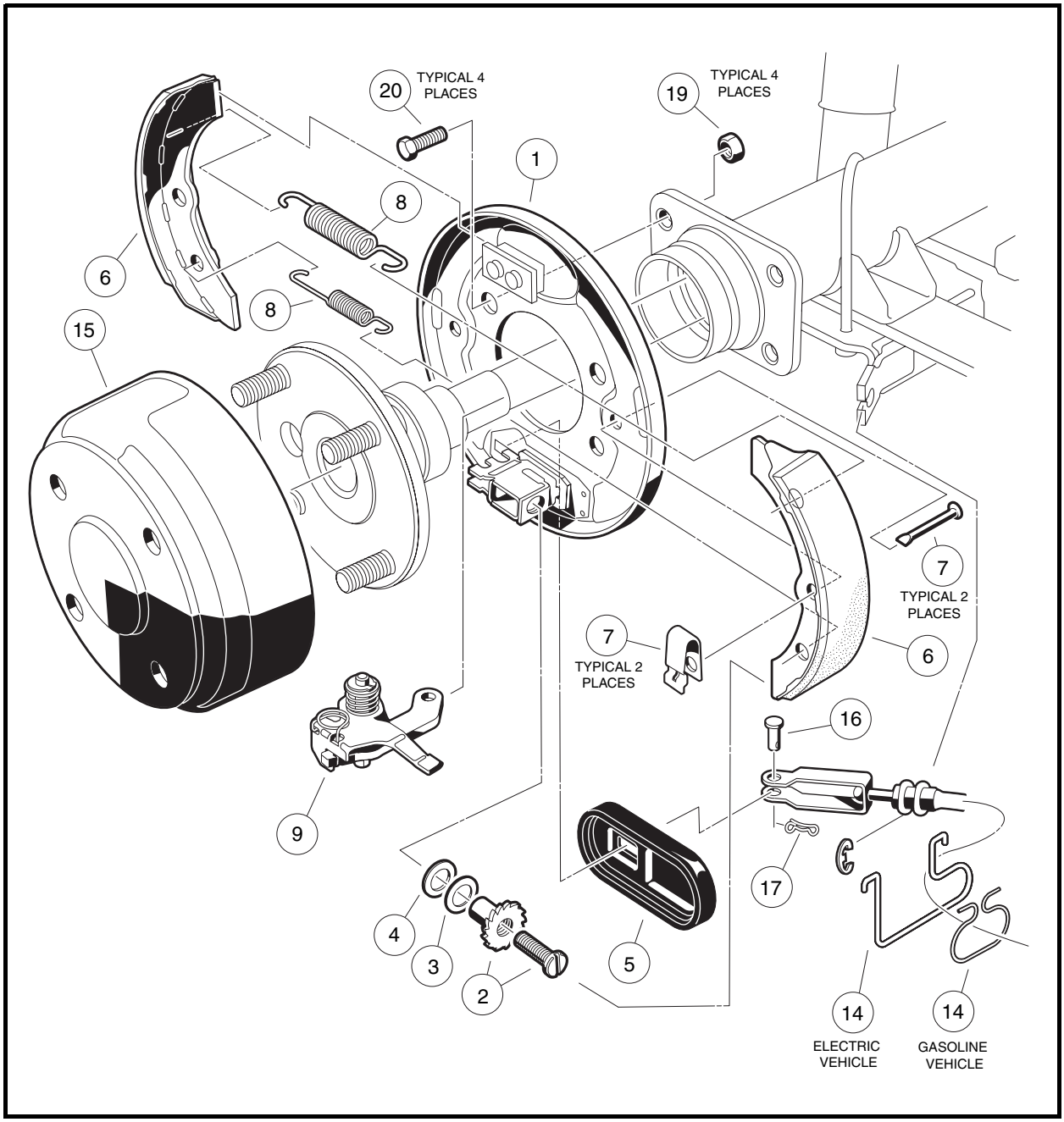

Figure 6-11 Self-Adjusting Brake Assembly

BRAKE SHOE INSTALLATION (SELF-ADJUSTING BRAKES)

See General Warning, Section 1, Page 1-1. See also Warning, on Page 6-1.

Turf 1 and Carryall 1 vehicles

1. Turn the adjusting wheel screw so the shoe slot is vertical, then position the trailing shoe in the slots in the shoe mounting block and adjuster assembly **(Figure 6-12, Page 6-6)**. **See following NOTE.**

Brake Shoe Installation (Self-Adjusting Brakes), Continued:

NOTE: *The trailing shoe has 17T stamped into the tip of the shoe flange* ***(Figure 6-12, Page 6-6)****. The leading shoe is stamped 17L. When installing the shoes, the stampings on both shoes should be oriented to the top of the brake assembly. When installing the shoes on the passenger side of the vehicle, the side of the trailing shoe flange marked 17T should be facing out and be visible. On the driver side, the 17L on the leading shoe should be facing out and be visible.*

When installed on the backing plate, the leading shoe (stamped 17L) is always oriented toward the rear of the vehicle.

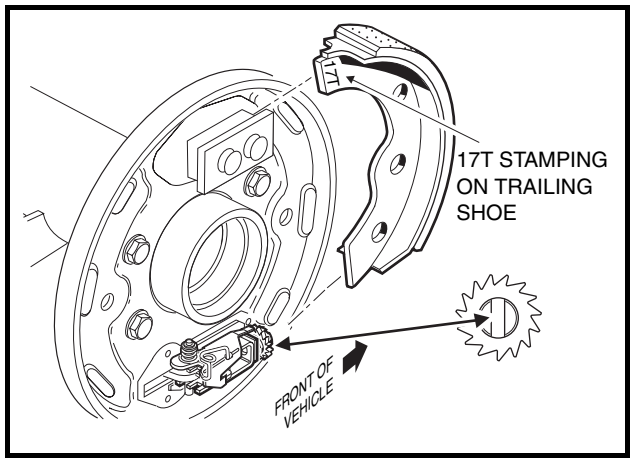

Figure 6-12 Trailing Shoe

2. Install the shoe retainer clip (1). Compress clip while turning retainer pin (2) into position **(Figure 6-13, Page 6-6)**.
3. Attach the springs onto the trailing shoe already installed. Hold the leading shoe next to the trailing shoe, correctly oriented, and attach the springs to it **(Figure 6-14, Page 6-6)**.

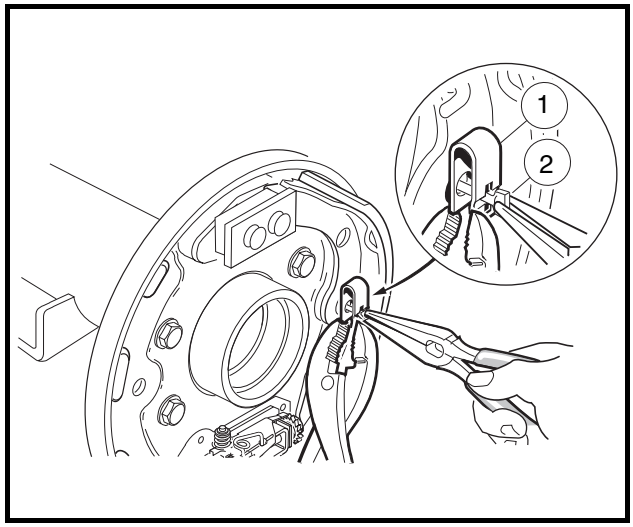

Figure 6-13 Retainer Clip

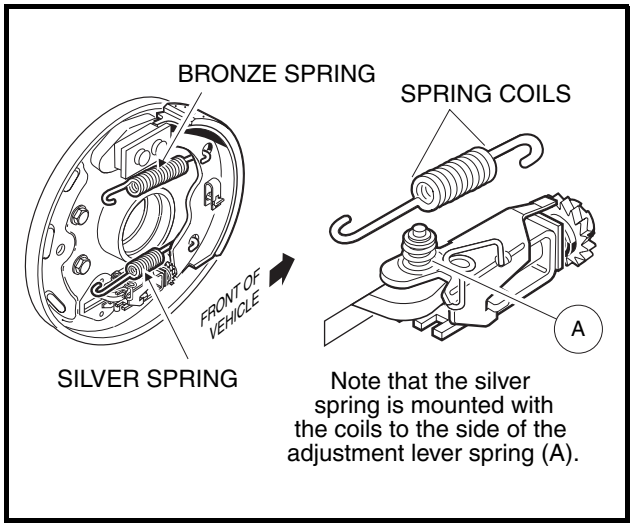

Figure 6-14 Spring Orientation

4. While maintaining spring attachment on both shoes, position tips of leading shoe in the mounting slots and then push shoe into place. Hold shoe in position and install retaining clip **(Figure 6-15, Page 6-7)**.

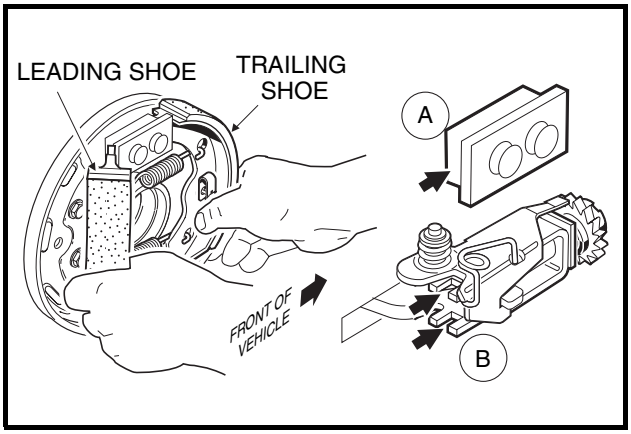

Figure 6-15 Install Leading Shoe

5. After the shoes are installed, move them together up and down and side to side to make sure that they will easily slide approximately 1/4 to 3/8 inch (6.3 to 9.5 mm) without binding. Make sure the shoes are positioned vertically so that the tips of the shoes are positioned flush at the top with the top surfaces of the wedge shapes on the shoe mounting blocks as shown **(Figure 6-16, Page 6-7)**.

6. Place a flat blade screwdriver under the adjusting arm and raise arm off of the adjusting wheel. While holding the arm up, turn the wheel upward until it stops **(Figure 6-17, Page 6-7)**. Remove the screwdriver. **See following CAUTION.**

⚠ CAUTION

- **Clean any residual oil from the exposed end of the axle shaft and from the oil seal area prior to installing the axle shaft.**

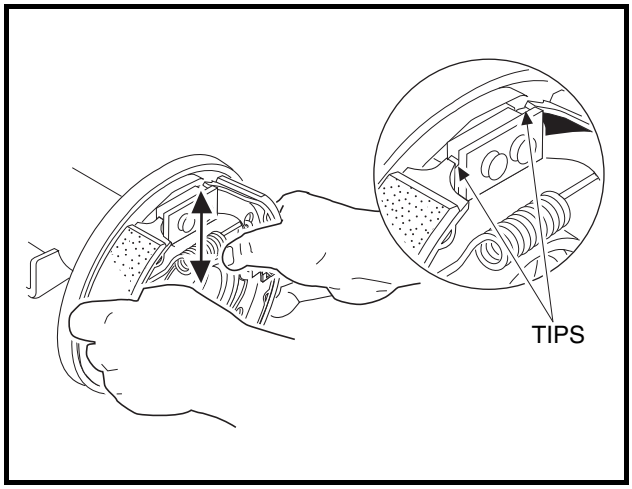

Figure 6-16 Slide Shoes

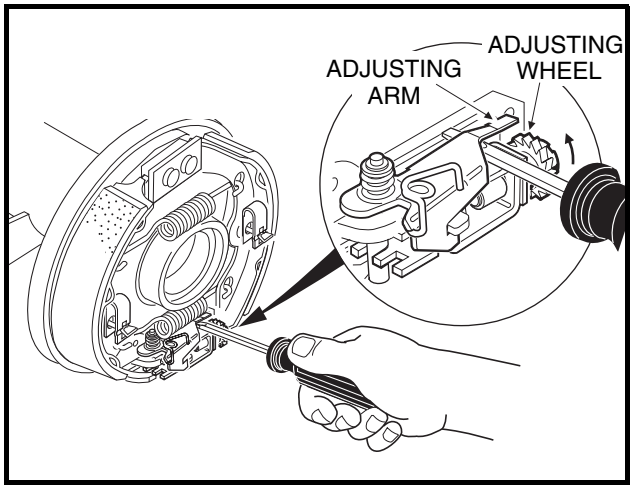

Figure 6-17 Turn Adjusting Wheel (Self-Adjusting Brakes)

Brake Shoe Installation (Self-Adjusting Brakes), Continued:

7. Install axle shaft (2) into axle tube and install retaining ring (1) **(Figure 6-3, Page 6-2). See following WARNING and CAUTION.**

⚠ WARNING

- **Be sure retaining ring is properly seated in groove. If ring is not properly installed, the axle assembly will separate from the transaxle and damage the axle assembly and other components. Loss of vehicle control could result in severe personal injury or death.**

⚠ CAUTION

- **Clean any residual oil from the exposed end of the axle shaft and from the oil seal area prior to installing the axle shaft.**

8. Install the brake drum and make sure it is properly seated. **See following NOTE.**

NOTE: *If drum installation is difficult, the brake shoes may need to be adjusted vertically in the mounting slots.*

9. After drum is installed, make sure the axle and drum turn freely, then install wheel and tire assembly. **See Section 7 – Wheels and Tires.**

BRAKE ADJUSTMENT (SELF-ADJUSTING BRAKES)

See General Warning, Section 1, Page 1-1. See also Warning, on Page 6-1.

Turf 1 and Carryall 1 vehicles

1. When cleaning or repair on both wheels is complete, and with brake cable still loose, lower vehicle to floor.
2. Make the brake shoe and drum adjustment by pressing and releasing the brake pedal repeatedly until an audible clicking can no longer be heard.
3. Adjust brake pedal free play. **See following NOTE.**

NOTE: *Brake pedal free play is the distance the brake pedal can be pressed before the brake actuator arm (at the brake cluster) moves.*

3.1. Measuring perpendicular from the floorboard to the back of the brake pedal, press the brake pedal and measure the distance that the pedal moves before all of the slack is taken out of the brake cables **(Figure 6-18, Page 6-9)**.

3.2. Tighten the nut on the equalizer rod so that the brake pedal free play is 1/4 to 1/2 inch (6.35 mm to 12.7 mm).

3.3. Tighten the jam nut (3) while holding the adjustment nut (2) in the correct position.

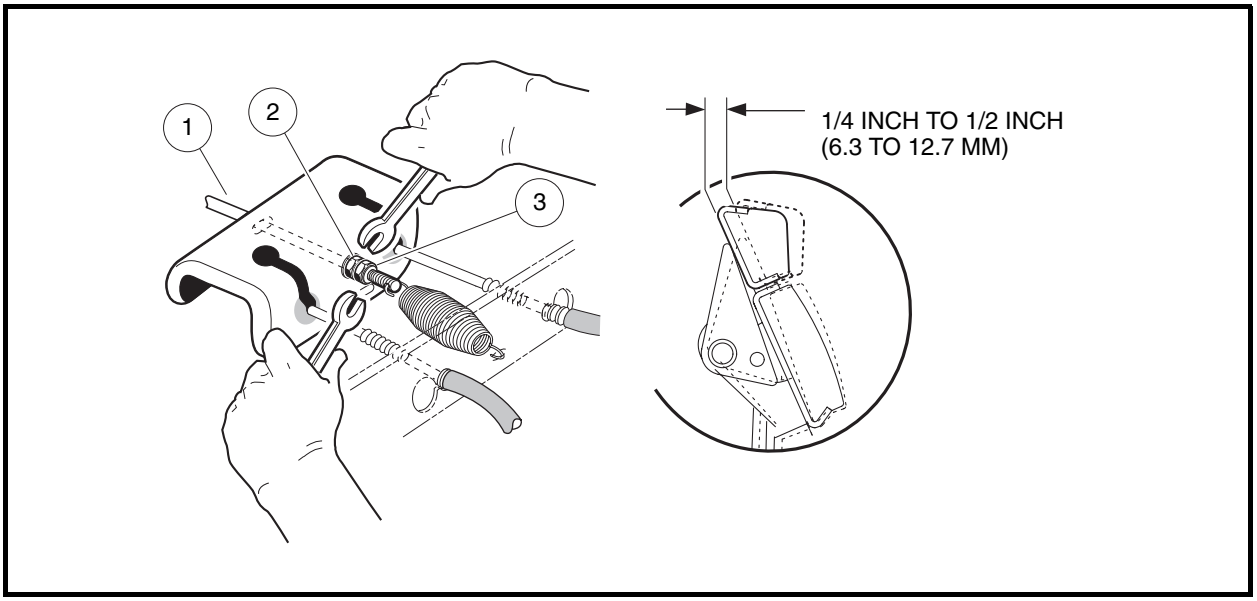

Figure 6-18 Brake Pedal Free Play Adjustment

BRAKE ASSEMBLY CLEANING (MANUALLY-ADJUSTED BRAKES)

See General Warning, Section 1, Page 1-1. See also Warning, on Page 6-1.

Turf 2, Carryall 2, 2 Plus, and 6 vehicles

1. Carefully clean the brake backing plate and all mechanical components.
2. Remove rubber boot from backing plate and wipe with a clean, damp cloth.
3. Lubricate slide (1) and slide plate (2) with dry moly lubricant (CCI P/N 1012151) on both sides of the backing plate. After lubricating, work slide back and forth to ensure it slides smoothly and easily **(Figure 6-19, Page 6-9)**. Reinstall rubber boot onto backing plate. **See following WARNING.**

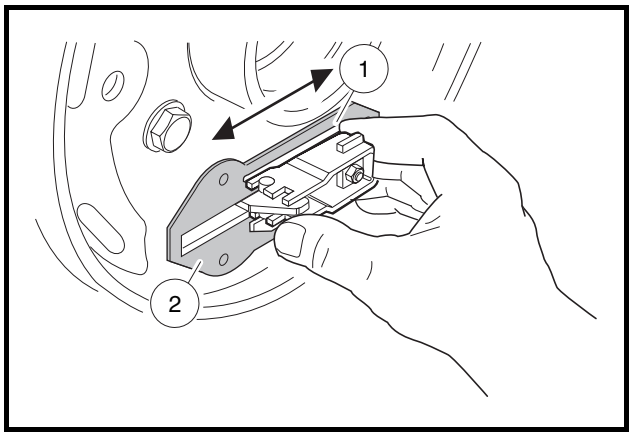

Figure 6-19 Lubricate Slide

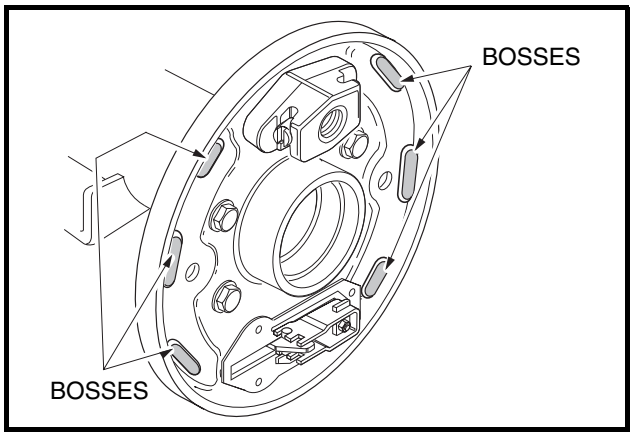

Figure 6-20 Lubricate Raised Bosses

Brake Assembly Cleaning (Manually-Adjusted Brakes), Continued:

⚠ WARNING

- **Apply grease carefully when performing the following steps. Do not allow any grease to get on the friction surfaces of the brake shoe pads. Failure to heed this warning could cause diminished brake performance, possibly resulting in property damage or severe personal injury.**

4. Use a small brush to carefully apply a light coat of white lithium NLGI #2 grease (Dow Corning BR2-Plus or equivalent) on each of the six raised bosses on brake backing plate **(Figure 6-20, Page 6-9)**. **See preceding WARNING.**
5. Use a small brush to carefully apply a light coat of white lithium NLGI #2 grease (Dow Corning BR2-Plus or equivalent) to each end of both brake shoes and into the slots in the brake shoe mounting block as shown **(Figure 6-21, Page 6-10)**. **See preceding WARNING.**
6. Use a small brush to carefully apply a light coat of white lithium NLGI #2 grease (Dow Corning BR2-Plus or equivalent) to the brake actuator assembly as shown **(Figure 6-22, Page 6-10)**. **See preceding WARNING.**

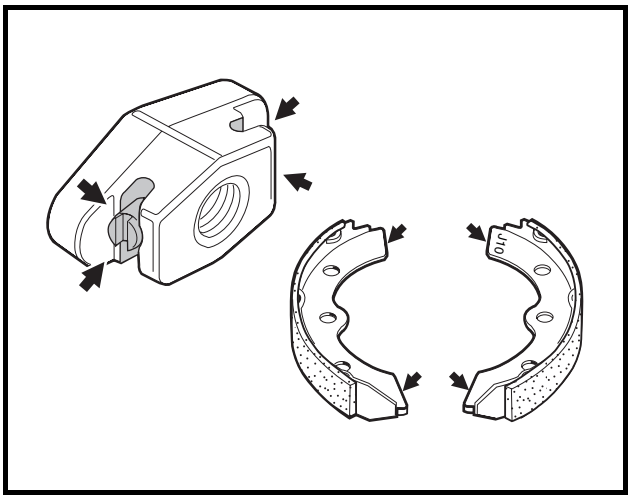

Figure 6-21 Lubricate Shoes

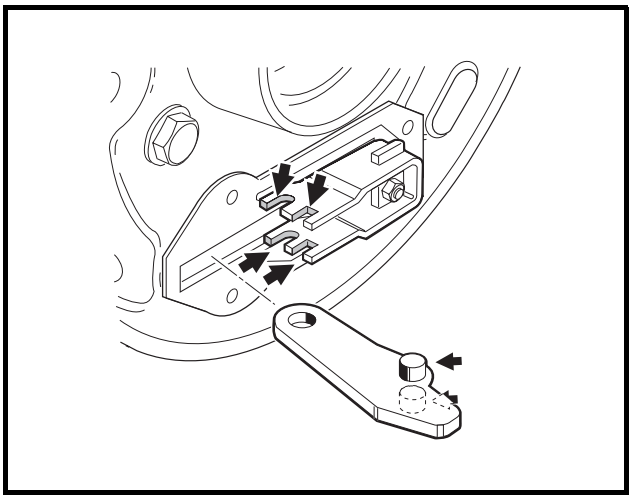

Figure 6-22 Lubricate Actuator

BRAKE SHOE INSTALLATION (MANUALLY-ADJUSTED BRAKES)

See General Warning, Section 1, Page 1-1. See also Warning, on Page 6-1.

Turf 2, Carryall 2, 2 Plus, and 6 vehicles

NOTE: *Components of the front wheel brake assembly are identical to the rear wheel manually-adjusted brake assembly. The front brake assembly is rotated 90° (when compared to the rear brake assembly) so the adjusting bolt on each assembly is oriented to the rear of the vehicle rather than at the top of the assembly* ***(Figure 6-32, Page 6-15)****.*

1. Position one shoe in the slots in the mounting block anchor piston and brake actuator **(Figure 6-23, Page 6-11)**. **See following WARNING.**

⚠ WARNING

- **When installing brake shoes, the shoes must be oriented with tips stamped J10 inserted into the mounting block anchor piston slots rather than into the brake actuator slots (Figure 6-23, Page 6-11). Incorrectly installed brake shoes will be too tight and make adjustment of the brake impossible.**

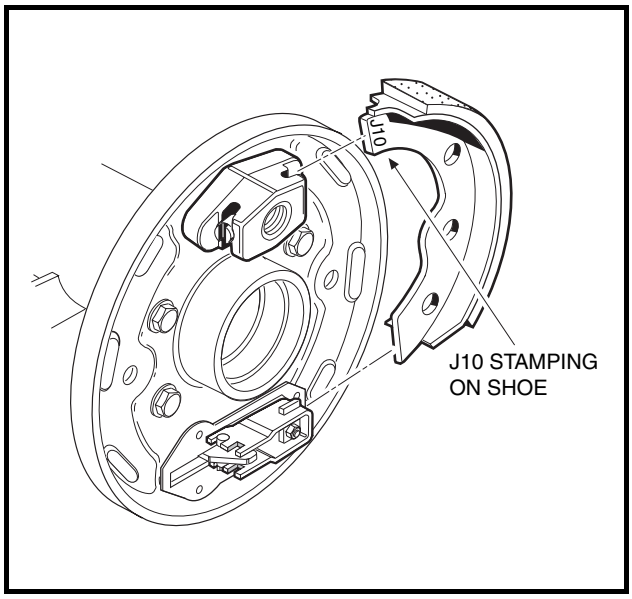

Figure 6-23 Position Shoes

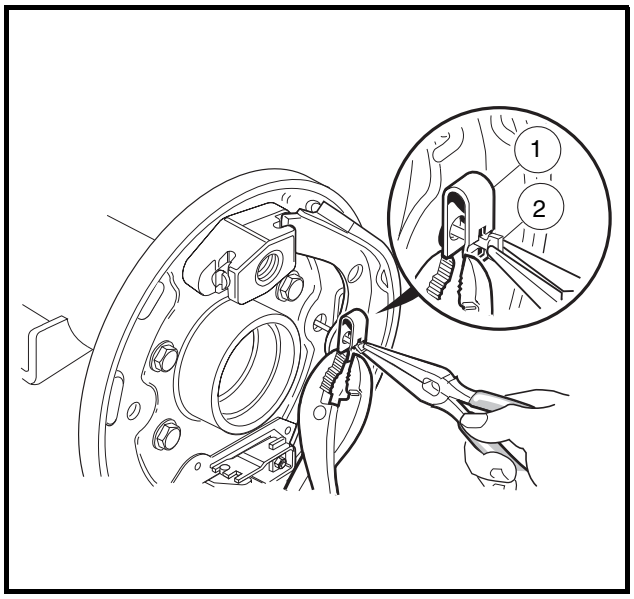

Figure 6-24 Retainer Clip

2. Install shoe retainer clip (1), using pliers to compress clip while turning clip retainer pin (2) into position **(Figure 6-24, Page 6-11)**.

3. Attach the springs (with hooks pointing outwards) onto the shoe already installed. Then hold the other shoe next to it, correctly oriented, and attach the springs to it **(Figure 6-25, Page 6-12)**. **See following NOTE.**

NOTE: *With brake shoe tips marked J10 oriented to the mounting block, the stamping will be visible on one shoe only. The other J10 stamping will be facing the backing plate and will not be visible.*

4. While maintaining spring attachment on both shoes, position the tips of the second shoe into mounting slots and then push shoe into place. Hold shoe in position and install the retaining clip and pin **(Figure 6-25, Page 6-12)**.

5. After the shoes are installed, move them together up and down and side to side to make sure that they will easily slide approximately 1/4 to 3/8 inch (6.3 to 9.5 mm) without binding. Make sure the shoes are positioned vertically so the tips of the shoes are positioned flush with the top surface of the shoe mounting blocks as shown **(Figure 6-26, Page 6-12)**. **See following CAUTION.**

Brake Shoe Installation (Manually-Adjusted Brakes), Continued:

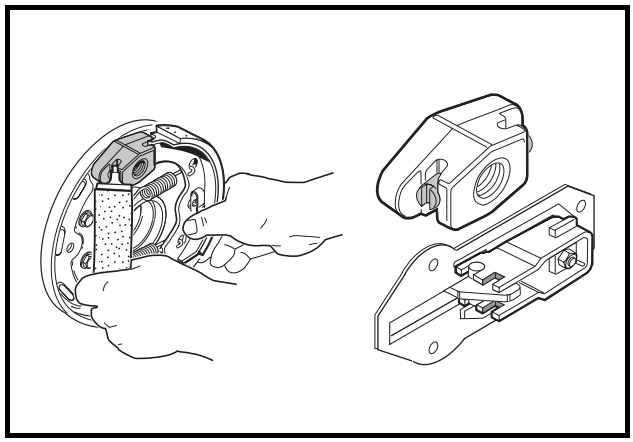

Figure 6-25 Insert Shoes

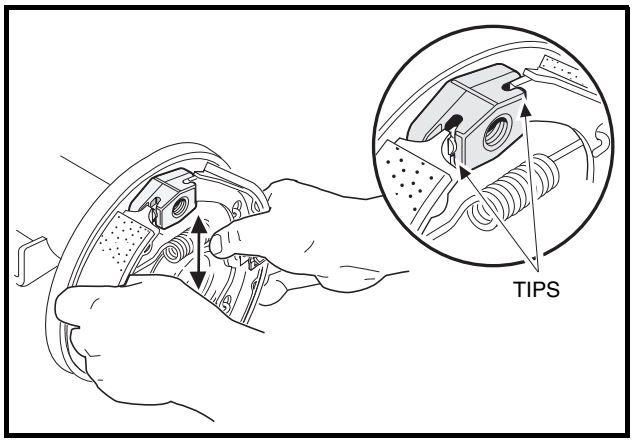

Figure 6-26 Position Shoes

⚠ CAUTION

- **Clean any residual oil from the exposed end of the axle shaft and from the oil seal area prior to installing the axle shaft.**

6. Install axle shaft (2) into axle tube and install retaining ring (1) **(Figure 6-3, Page 6-2)**. **See WARNING on page 6-8.**
7. Install the brake drum and make sure that it is properly seated. **See following NOTE.**

NOTE: *If drum installation is difficult, the brake shoes may need to be adjusted vertically in the mounting slots.*

8. After the drum is installed, make sure the axle and drum turn freely.

BRAKE ADJUSTMENT (MANUALLY-ADJUSTED BRAKES)

See General Warning, Section 1, Page 1-1. See also Warning, on Page 6-1.

⚠ CAUTION

- **Pedal group adjustment must be within specifications prior to beginning brake adjustment. Perform the appropriate pedal group adjustment.**
  - **For gasoline vehicles, refer to Pedal Group Adjustment – Gasoline Vehicles, Section 5, Page 5-11.**
  - **For electric vehicles, refer to Pedal Group Adjustment – Electric Vehicles, Section 5, Page 5-16.**

NOTE: *All brake cluster components must be clean, lubricated, and in good working condition prior to beginning brake adjustment.*

All wheels must be installed on the vehicle and lug nuts tightened to 55 ft-lb (74.6 N·m).

BRAKE CLUSTER ADJUSTMENT

1. Chock wheels.
   1.1. To provide slack in the brake cables, loosen the equalizer retaining nuts (1 and 5) on the equalizer rod (2) **(Figure 6-27, Page 6-13)**.
2. **Four-wheel brake vehicles only:** Loosen the front brake equalizer rod **(Figure 6-28, Page 6-13)**.
3. Remove the dust cover (4) on the left and right rear brake cluster assemblies **(Figure 6-29, Page 6-13 and Figure 6-30, Page 6-13)**.

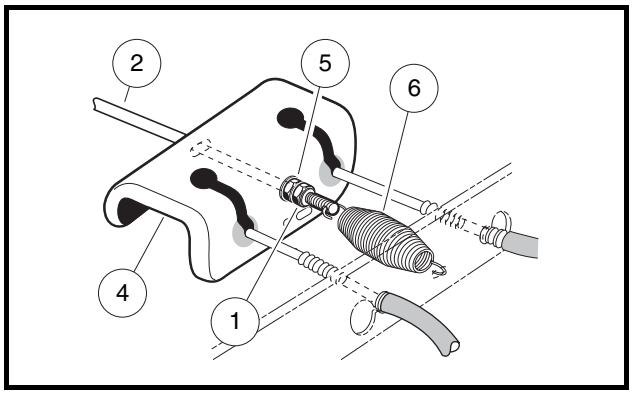

Figure 6-27 Rear Equalizer Adjustment

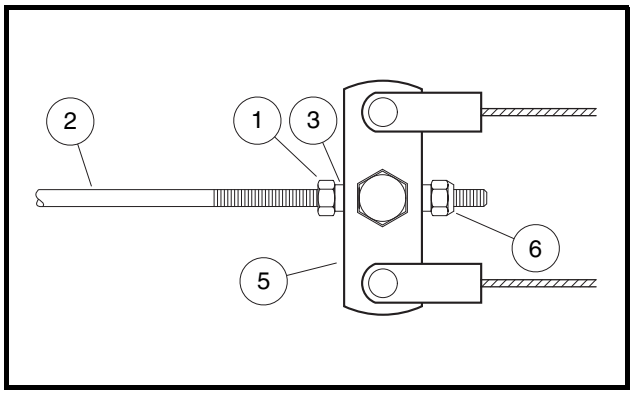

Figure 6-28 Front Equalizer Adjustment

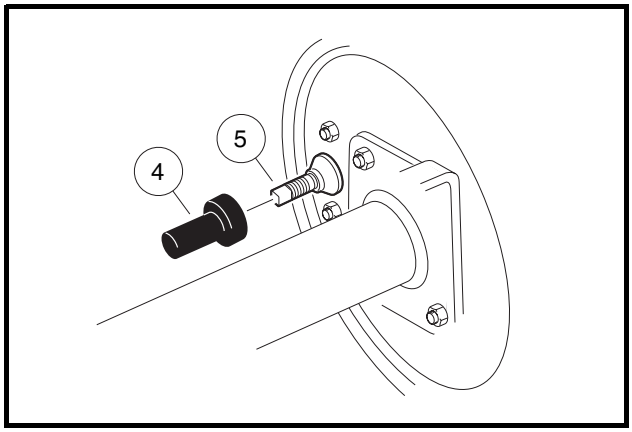

Figure 6-29 Front Brake Adjustment Bolt

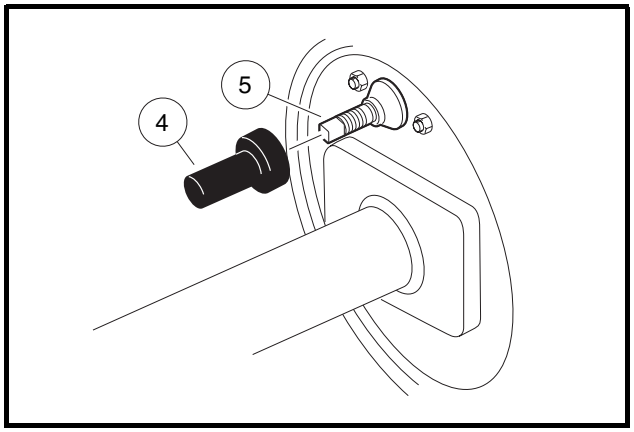

Figure 6-30 Rear Brake Adjustment Bolt

4. Use a torque wrench and a 7-mm 8-point socket or Club Car brake adjustment tool (CCI P/N 1013582) to turn the brake adjustment bolt (5) on each brake clockwise until it is tightened to 15 ft-lb (20.3 N·m) and continue clockwise rotation to the point at which torque is released. Stop tightening the bolt as soon as the torque releases, or the brake will not be properly adjusted. **See following NOTE.**

NOTE: *If a wheel can still be turned by hand after step 4, inspect the brake clusters and clean and/or replace all parts that do not work properly.*

5. **Four-wheel brake vehicles only:** Repeat procedure at front brake clusters.

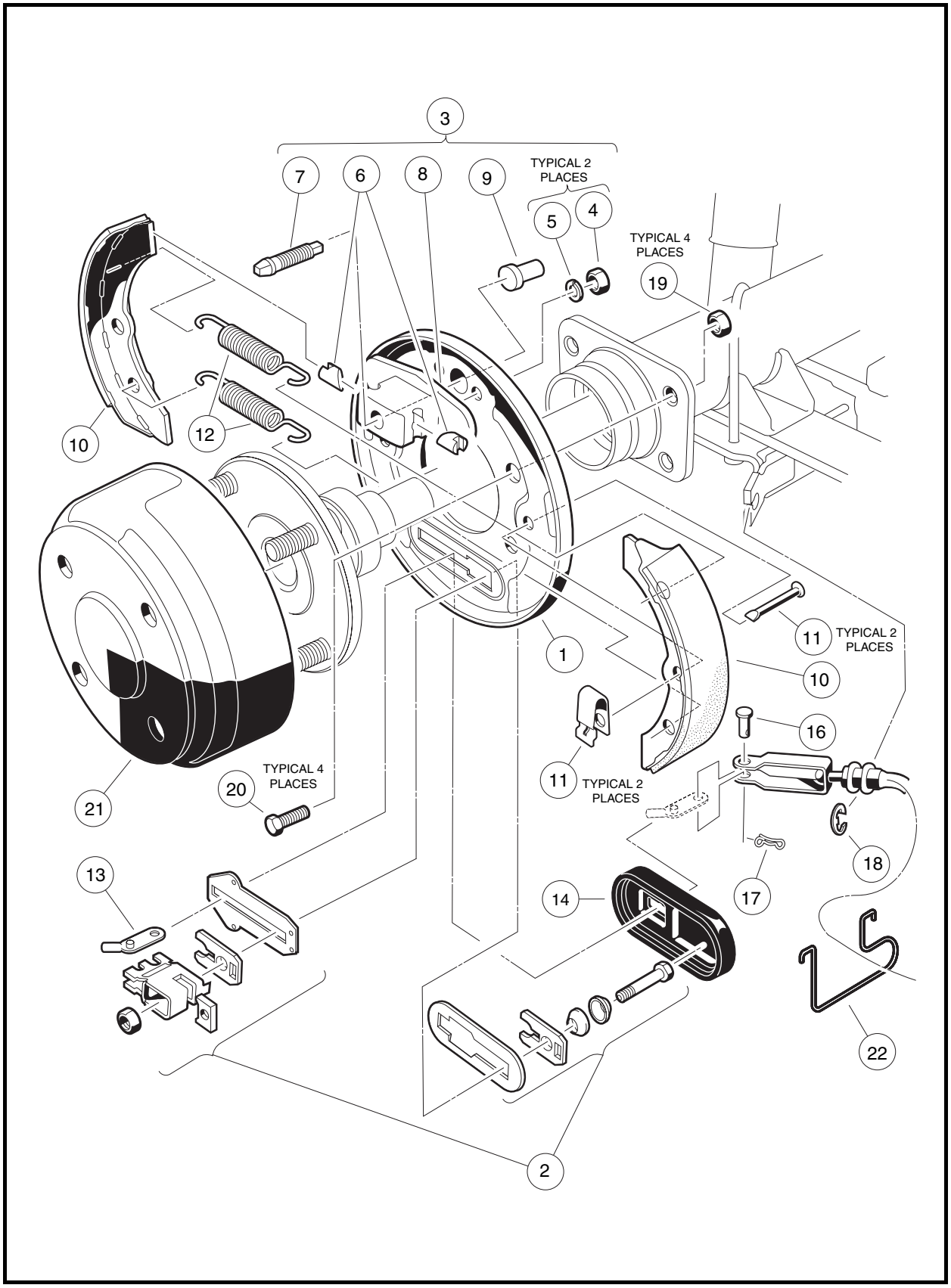

Figure 6-31 Rear Manually-Adjusted Brake Assembly

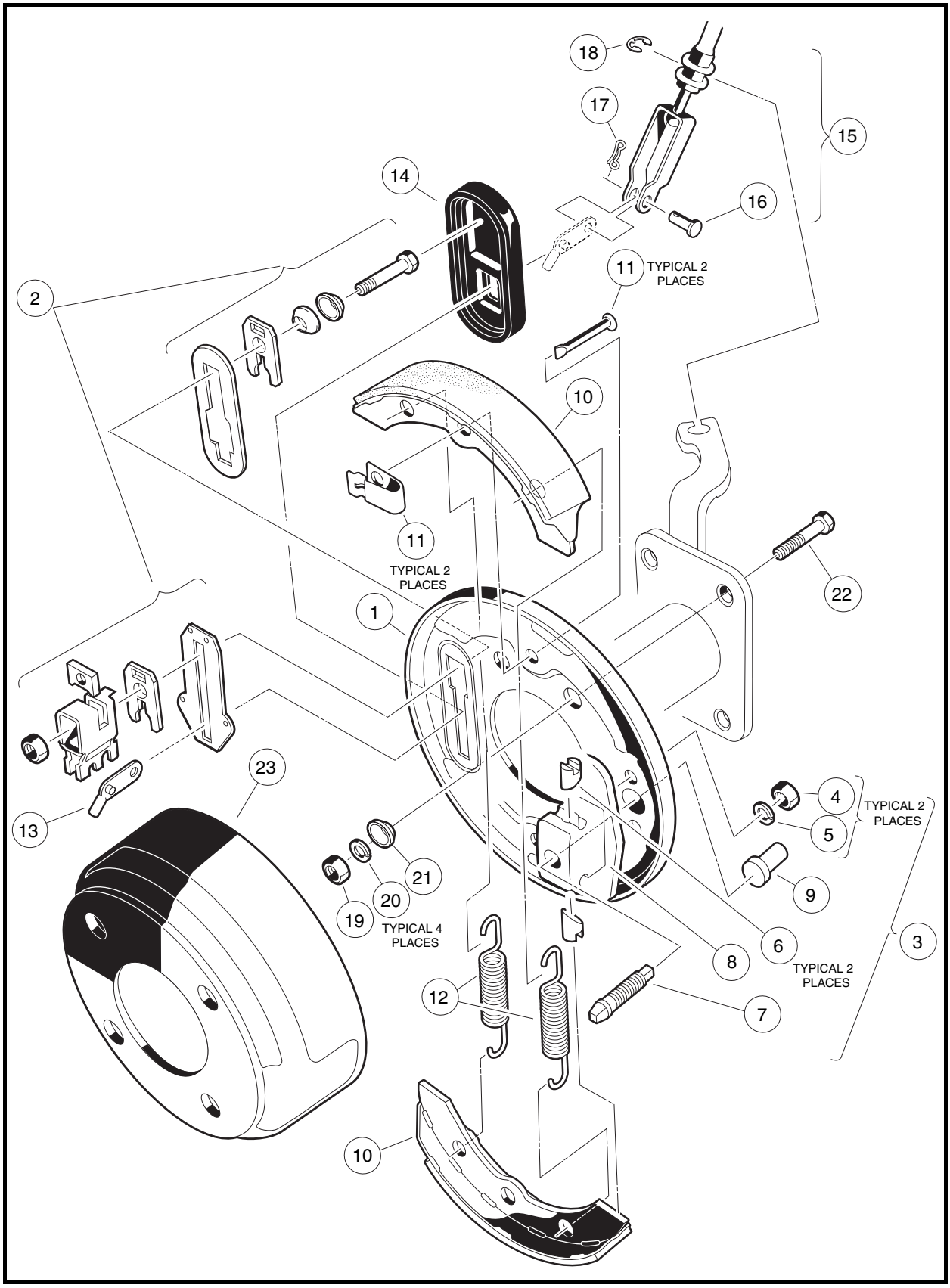

Figure 6-32 Front Manually-Adjusted Brake Assembly

BRAKE CABLE EQUALIZATION

1. Set park brake in the third tooth of the ratchet. Place a wedge between the park brake pedal and brake pedal to prevent the park brake from disengaging while equalizing the brake cables **(Figure 6-33, Page 6-16)**.

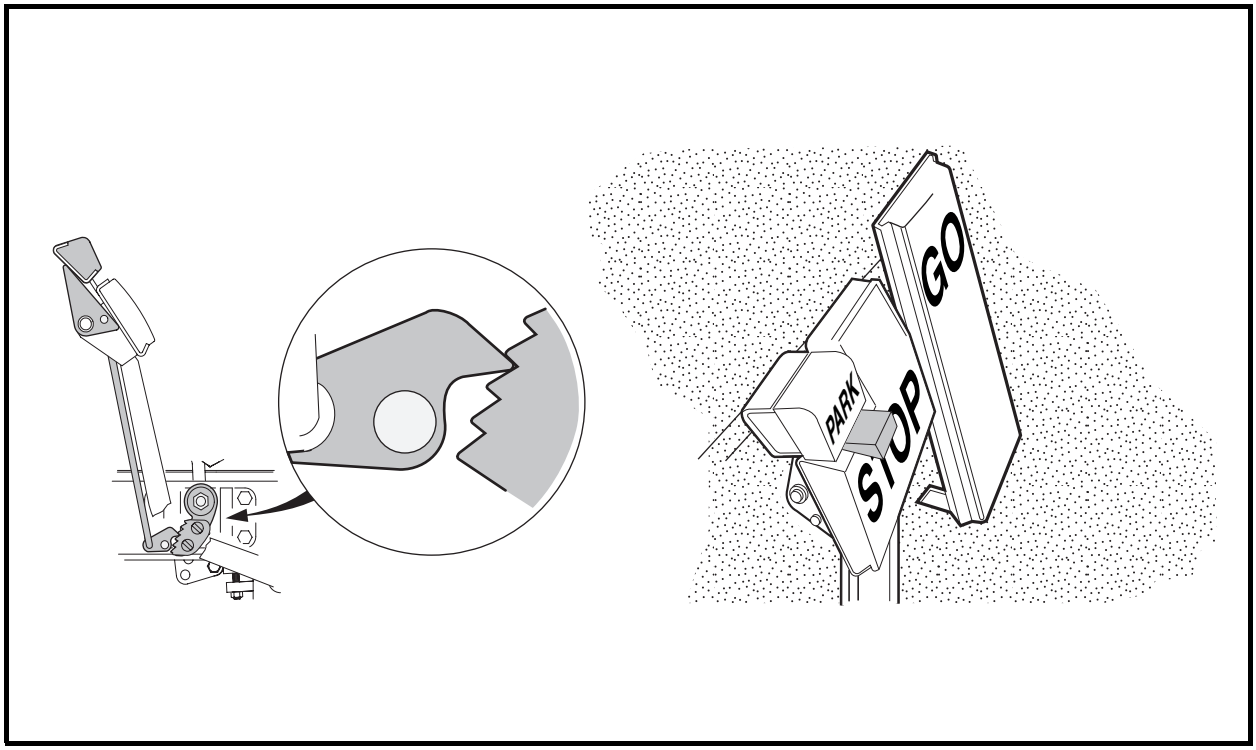

Figure 6-33 Set Park Brake and Insert Wedge

2. Equalize the brake cables.

   2.1. **Four-wheel brake vehicles only:** Tighten the nylon lock nut (6) on the front equalizer rod (2) to 35 in-lb (4 N·m) **(Figure 6-28, Page 6-13)**.

   2.2. Tighten the jam nut (5) on the rear equalizer rod (2) clockwise to 35 in-lb (4 N·m) **(Figure 6-27, Page 6-13)**.

   2.3. Repeat steps 2.1 and 2.2 until the nuts remain on the torque setting.

   2.4. Hold the lock nut (6) on the front equalizer rod (2) in place with a wrench and tighten the jam nut (1) to 13 ft-lb (17.6 N·m) **(Figure 6-28, Page 6-13)**.

   2.5. Hold the jam nut (5) on the rear equalizer rod (2) in place with a wrench and tighten the lock nut (1) to 13 ft-lb (17.6 N·m) **(Figure 6-27, Page 6-13)**. **See following CAUTION.**

⚠ CAUTION

- **If the brake pedal return spring (6) was disconnected while equalizing the brake cables, be sure to reconnect it before proceeding (Figure 6-27, Page 6-13).**

FINAL BRAKE CLUSTER ADJUSTMENT

1. To adjust the brake shoes, turn the adjustment bolt counterclockwise five clicks.
2. Repeat step 1 at other brake cluster(s).
3. Install the rubber dust covers (4) over the brake adjustment bolts (5) **(Figure 6-29, Page 6-13 and Figure 6-30, Page 6-13).**
4. Carefully support the vehicle with the lifting device, remove jack stands and lower the vehicle to the ground.

TEST DRIVE VEHICLE

1. With the vehicle on a level surface, release the park brake and push the vehicle by hand. If brake drag exists, readjust cable tension and brakes. **See Brake Cable Equalization on page 6-16. See also Final Brake Cluster Adjustment on page 6-17.**
2. Pedal free play should be less than 1 inch (2.5 cm). If free play exceeds 1 inch (2.5 cm), check pedal group adjustment, and readjust cable tension and brakes. **See Brake Cable Equalization on page 6-16. See also Final Brake Cluster Adjustment on page 6-17. See following NOTE.**

NOTE: *Brake pedal free play is the distance the brake pedal can be pressed before the brake actuator arm (at the brake cluster) moves.*

3. Test drive vehicle. Be sure the brakes function properly. When brake pedal is fully pressed under moderate pressure, it should **not** go more than halfway to floor, and the vehicle should come to a smooth, straight stop. If the brake pedal goes more than halfway to the floor, or if the vehicle swerves or fails to stop, check pedal group adjustment, and readjust cable tension and brakes. **See Brake Cable Equalization on page 6-16. See also Final Brake Cluster Adjustment on page 6-17.** Brake adjustment must be maintained so the brake pedal cannot be pressed to the floor under any circumstance.

BRAKE CLUSTER REMOVAL AND INSTALLATION

See General Warning, Section 1, Page 1-1. See also Warning, on Page 6-1.

REAR BRAKE CLUSTER REMOVAL

1. Place chocks at the front wheels, loosen the lug nuts on the rear wheels and lift the rear of the vehicle with a chain hoist or floor jack. Place jack stands under the axle tubes to support the vehicle.
2. Release park brake and loosen equalizer retaining nuts (1 and 5) on equalizer rod (2) to slightly loosen brake cable **(Figure 6-27, Page 6-13)**.
3. Remove the rear wheels and then the brake drums. **See following NOTE.**

NOTE: *When servicing vehicles with self-adjusting brakes with badly worn brake shoes and when the drums cannot be removed by normal methods, perform step 4 of Brake Shoe Removal on page 6-2, then continue with this procedure.*

4. Remove the axle:
   4.1. Using 90° snap ring pliers, remove the axle retaining ring (1) **(Figure 6-3, Page 6-2)**.
   4.2. Pull the axle shaft (2) from the axle tube **(Figure 6-3, Page 6-2)**.

Rear Brake Cluster Removal, Continued:

5. Remove cotter pin (17) and clevis pin (16) from brake cable **(Figure 6-31, Page 6-14 or Figure 6-11, Page 6-5)**.
6. Remove 4 bolts (20) and cone lock nuts (19) that mount the brake assembly to the transaxle **(Figure 6-31, Page 6-14 or Figure 6-11, Page 6-5)**.
7. Remove rear brake cluster assembly from transaxle.

REAR BRAKE CLUSTER INSTALLATION

1. Install in reverse order of disassembly. Use new bow-tie pins when installing brake cables. **See following CAUTION.**

⚠ CAUTION

- **Clean any residual oil from the exposed end of the axle shaft and from the oil seal area prior to installing the axle shaft.**

2. Be sure bolts (20) and new cone lock nuts (19) are used to mount the brake assembly **(Figure 6-31, Page 6-14 or Figure 6-11, Page 6-5)**.
3. Tighten nuts to 17 ft-lb (23.0 N·m). If torquing the bolts heads, torque to 30 ft-lb (40.6 N·m). **See following WARNING**.

⚠ WARNING

- **Be sure retaining ring is properly seated in groove. If ring is not properly installed, axle assembly will separate from transaxle and damage axle assembly and other components. Loss of vehicle control could result in severe personal injury or death.**

4. Adjust brakes as previously described in this section for the appropriate vehicle. **See Brake Adjustment (Self-Adjusting Brakes) on page 6-8 or Brake Adjustment (Manually-Adjusted Brakes) on page 6-12.**

FRONT BRAKE CLUSTER REMOVAL

1. Place chocks at rear wheels, loosen lug nuts on front wheels, and lift the front of the vehicle with a chain hoist or floor jack. Place jack stands under the round tube crossmember of the frame to support vehicle.
2. Release park brake.
3. Loosen the equalizer retaining nuts (1 and 6) on the front equalizer rod (2) to slightly loosen the brake cable **(Figure 6-28, Page 6-13)**.
4. Remove the front wheels and then the brake drums.
5. Remove bow-tie pin (17) and clevis pin (16) from brake cable **(Figure 6-32, Page 6-15)**.
6. Remove dust cap (6) on hub and bearing assembly **(Figure 6-34, Page 6-19)**.
7. Remove cotter pin (5) and hex nut (7) from spindle shaft **(Figure 6-34, Page 6-19)**.

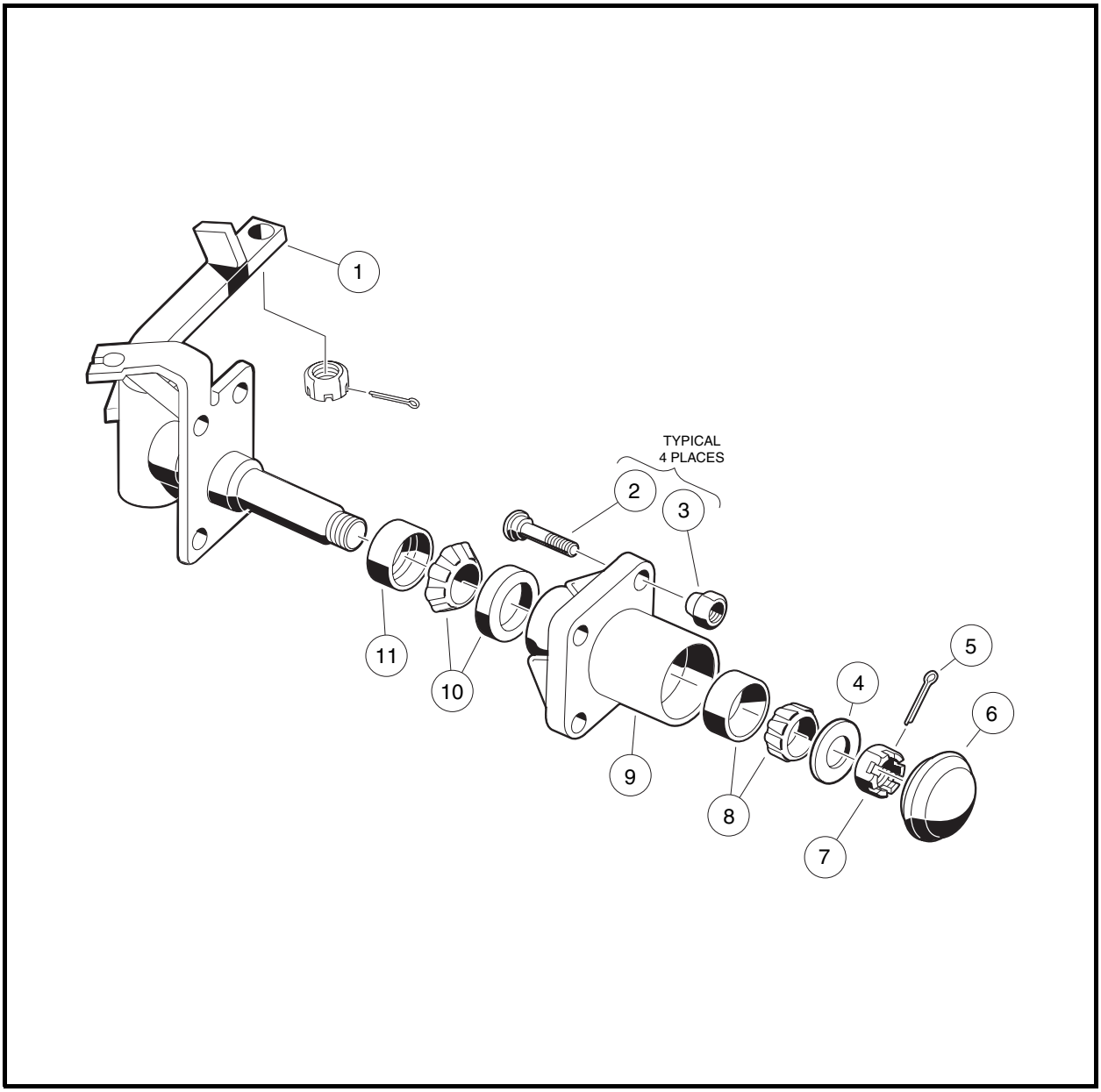

Figure 6-34 Front Spindle Assembly (Four-Wheel Brake Vehicles)

8. Remove hub and bearing assembly from spindle shaft. Remove four bolts (22), cone washers (21), lock washers (20) and hex nuts (19) that mount the brake assembly to the spindle **(Figure 6-32, Page 6-15)**.

9. Remove brake cluster assembly from spindle.

FRONT BRAKE CLUSTER INSTALLATION

1. Install in reverse order of removal. Use bolts (22), cone washers (21), lock washers (20) and hex nuts (19) to mount brake assembly **(Figure 6-32, Page 6-15)**.

2. Tighten bolts to 30 ft-lb (41 N·m). Adjust brakes as previously described in this section for the appropriate vehicle. Use new bow-tie pins when reconnecting brake cables.

FRONT BRAKE CABLES

See General Warning, Section 1, Page 1-1. See also Warning, on Page 6-1.

FRONT BRAKE CABLE REMOVAL

1. Remove bow-tie pin (2) and clevis pin (3) from brake lever arm on front brake cluster **(Figure 6-35, Page 6-20)**.
2. Remove E-clip (1) from brake cable housing at the front spindle bracket and remove cable from spindle **(Figure 6-35, Page 6-20)**.
3. Remove cotter pin (9), clevis pin (10), and E-clip (8) from brake cable at equalizer (18) **(Figure 6-36, Page 6-21)**.
4. Remove bolt (4) and nut (6) from brake cable clamp (5) **(Figure 6-35, Page 6-20)**.
5. Remove cable from vehicle.

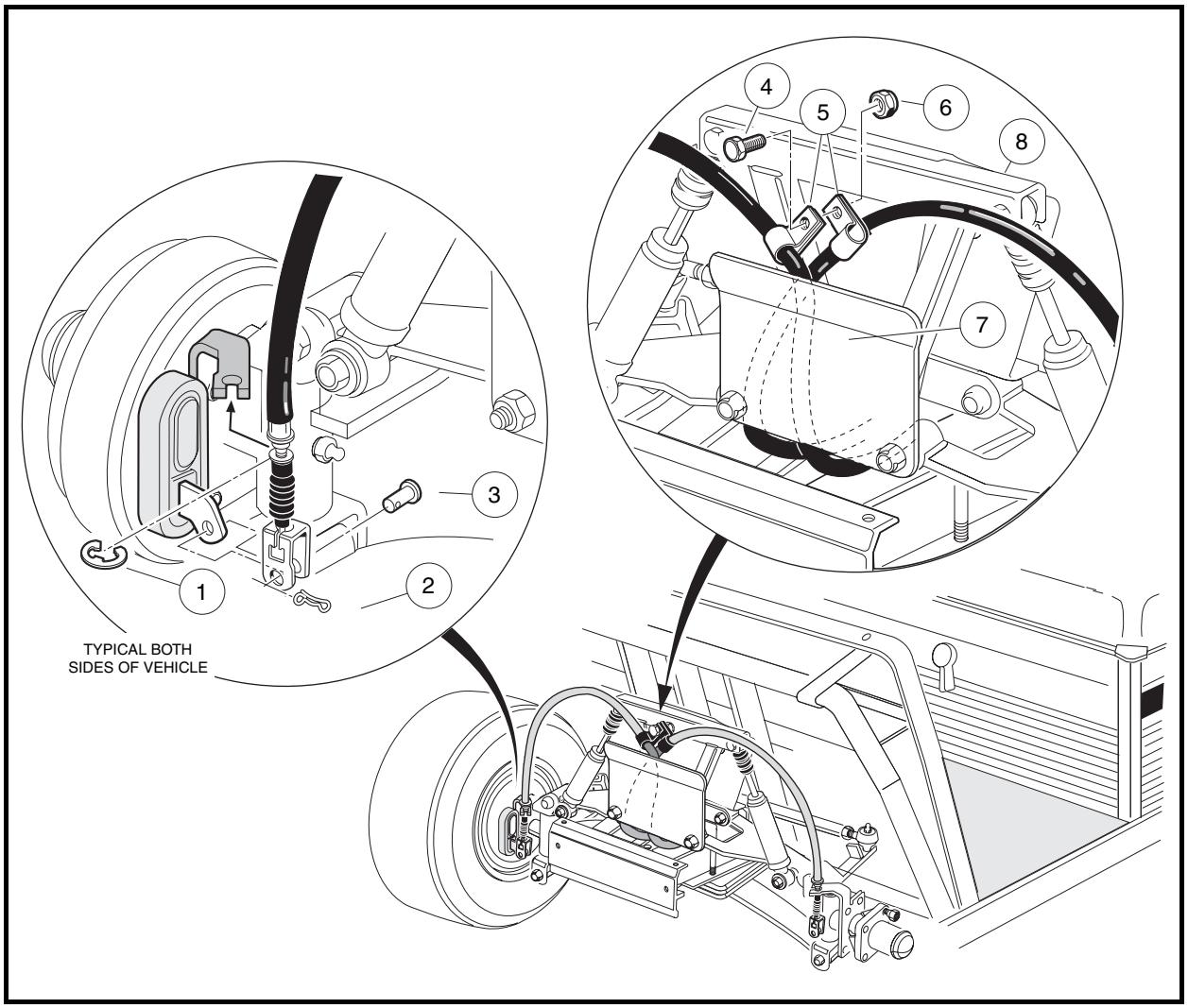

Figure 6-35 Front Brake Cables

FRONT BRAKE CABLE INSTALLATION

1. Place brake cable through frame mounting hole behind equalizer and install E-clip (8) on cable housing **(Figure 6-36, Page 6-21)**.

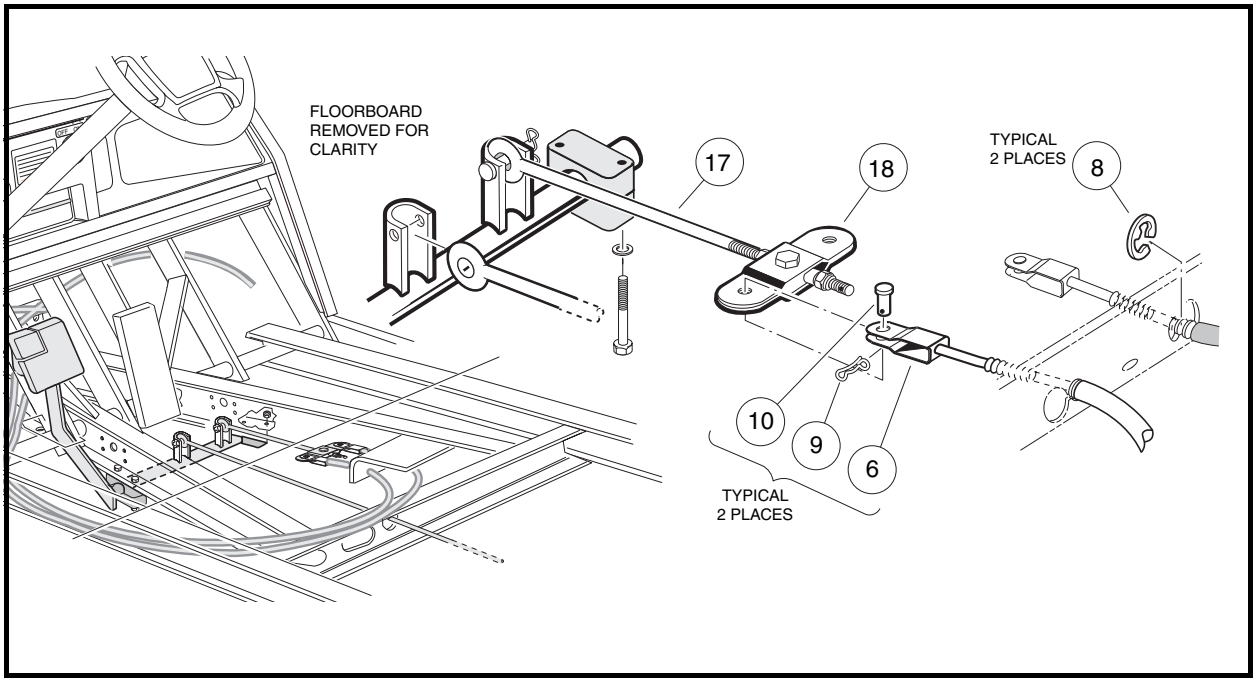

Figure 6-36 Brake Equalizer

2. Place brake cable clevis (6) on equalizer (18) and install the clevis pin (10) and new cotter pin (9).
3. Route cable towards the rear of vehicle and over to the driver-side I-beam and secure with wire ties so that the brake cable does not touch the brake equalizer **(Figure 6-37, Page 6-22)**.
   - **Turf 6 and Carryall 6 vehicles:** The cable should also pass over the brake equalizer rods. On the Turf 6 and Carryall 6 gasoline vehicle, the cable should also pass over the accelerator rod.
   - **Turf 2, Carryall 2 and Carryall 2 Plus vehicles:** The cable should pass over the inside I-beam **(Figure 6-37, Page 6-22)**.
4. Route cable along I-beam towards front of the vehicle and secure as shown **(Figure 6-37, Page 6-22)**.
   - **Turf 2 and Carryall 2 electric and all Turf 6 and Carryall 6 vehicles:** Route cable through hole in I-beam crossmember.
5. Route brake cable between the shock support (8) and brake cable guide bracket (7) **(Figure 6-35, Page 6-20)**. Secure brake cable retainer clips (5) with a bolt (4) and nut (6).
6. Install brake cable through the front spindle brackets and install E-clip (1).
7. Install brake cable clevis onto brake lever arm and install clevis pin (3) and a new bow-tie pin (2)**.**
8. Adjust brakes as described in this section for the appropriate vehicle.

Front Brake Cable Installation, Continued:

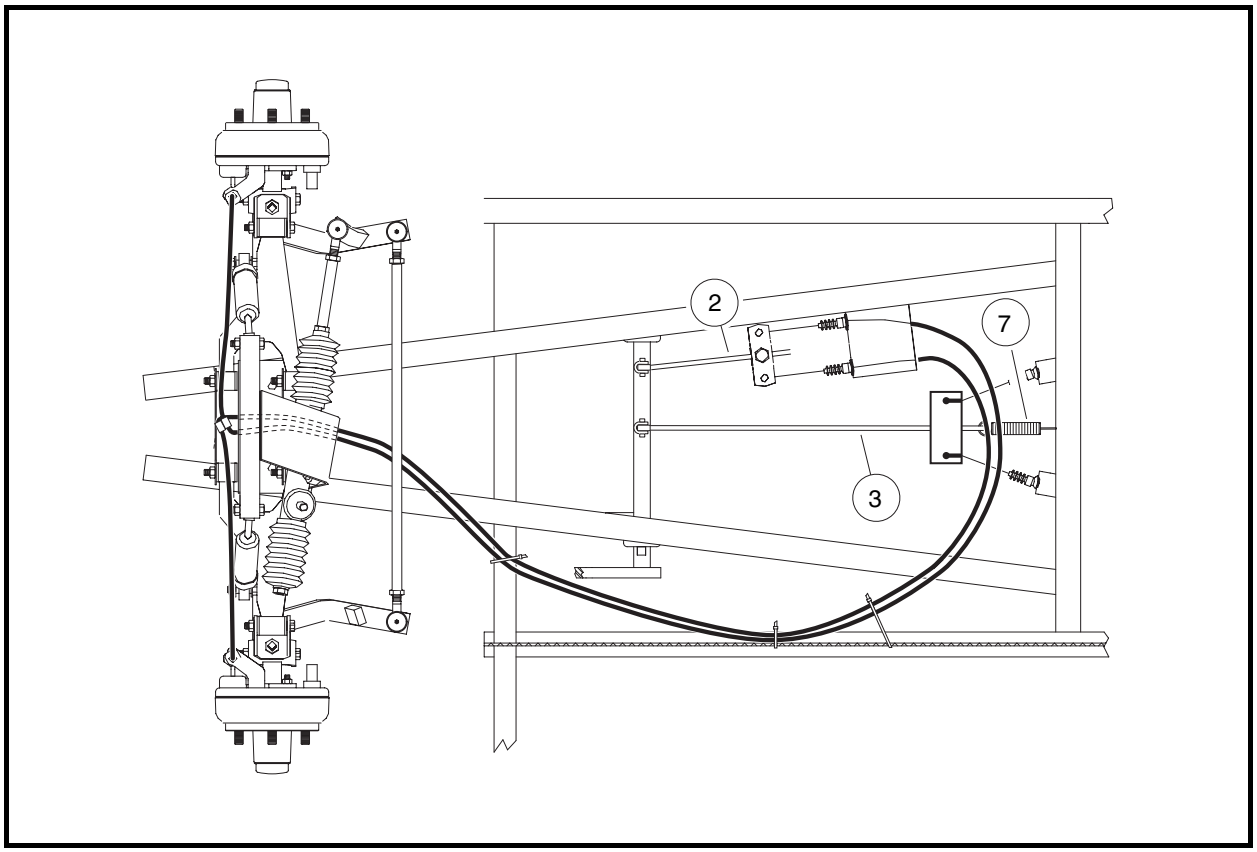

Figure 6-37 Front Brake Cable Routing

REAR BRAKE CABLES

See General Warning, Section 1, Page 1-1. See also Warning, on Page 6-1.

REAR BRAKE CABLE REMOVAL

1. Chock wheels to keep vehicle from unintentionally moving.
2. Release park brake if latched and loosen equalizer retaining nuts (1) on equalizer rod (2) to slightly loosen brake cables (3) **(Figure 6-38, Page 6-23)**.
3. Rotate brake cables upward and pull ends through holes in top of equalizer.
4. Disconnect brake cables at rear wheels.
   - 4.1. Remove bow-tie pins (1), clevis pins (2), and E-clips (3) **(Figure 6-39, Page 6-23)**.
   - 4.2. Remove cable (4) from cable support bracket (5).
   - 4.3. Note location of hangers (for installation of cables). Pull cables out of vehicle.

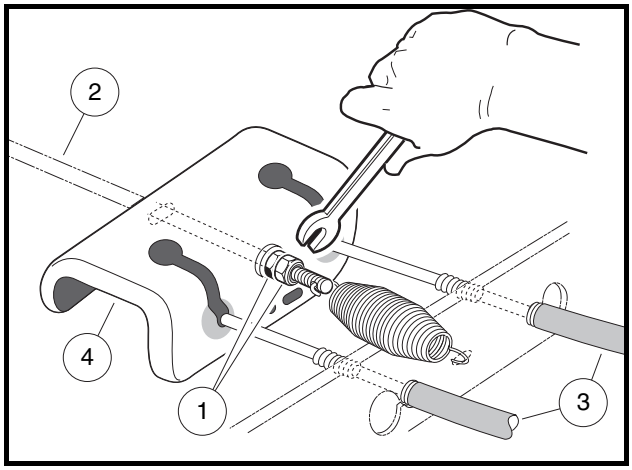

Figure 6-38 Loosen Equalizer Nut

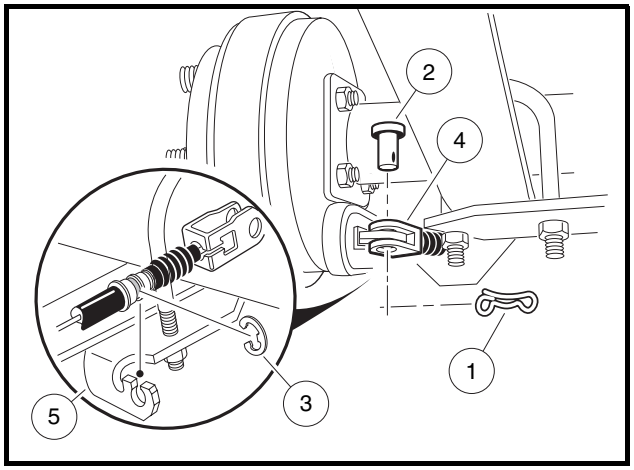

Figure 6-39 Disconnect Cables at Rear Brakes

REAR BRAKE CABLE INSTALLATION

1. Place the cable ends in the equalizer (4) **(Figure 6-38, Page 6-23)**. Route cables through hangers in the same manner as the ones removed.
2. At the rear wheel brakes, connect the cables to the brake actuator arms using clevis pins (2) and new bow-tie pins (1) **(Figure 6-39, Page 6-23)**.
3. Place cables in cable support bracket (5) and secure with E-clips.
4. Adjust brakes as described in this section for the appropriate vehicle.

SECTION 7 – WHEELS AND TIRES

⚠ DANGER

- **See General Warning, Section 1, Page 1-1.**

⚠ WARNING

- **See General Warning, Section 1, Page 1-1.**

GENERAL INFORMATION

Maximum tire life and good vehicle handling qualities are directly related to proper wheel and tire care.

- Keep tires properly inflated as follows:
  - 16-18 psi (1.10-1.24 Bars) for Turf 1 and Carryall 1 gasoline vehicles
  - 18-20 psi (1.24-1.38 Bars) for Turf 1 and Carryall 1 electric vehicles
  - 30-34 psi (2.07-2.34 Bars) for all other vehicles.
- Keep lug nuts properly tightened.
- Keep the front end properly aligned and adjusted.

WHEELS

See General Warning, Section 1, Page 1-1.

WHEEL REMOVAL

1. Slightly loosen the lug nuts on the wheel to be removed.
2. Raise the end of the vehicle from which the wheel is to be removed. Make sure the wheels are off the ground. **See WARNING "Lift only one end of the vehicle..." in General Warning, Section 1, Page 1-1.**
3. Remove the lug nuts and remove the wheel.

WHEEL INSTALLATION

1. Install wheel(s), and use a crisscross pattern to tighten the lug nuts until they are snug.
2. Lower the vehicle, and use a crisscross pattern finish tightening the lug nuts to 55 ft-lb (74.6 N·m).

TIRES

See General Warning, Section 1, Page 1-1.

TIRE REMOVAL

NOTE: *Tire must be removed or installed from the valve stem side of the rim.*

1. Remove the tire and wheel assembly from the vehicle as instructed. **See Wheel Removal on page 7-1.**
2. Remove the valve cap and valve core and allow air to escape from the tire.
3. If possible, use a tire machine to remove the tire from the rim.
   3.1. If a tire machine is not available, loosen both tire beads by applying pressure to the tire side walls and pushing the tire bead away from the rim flange and into the rim well **(Figure 7-1, Page 7-2, Detail A)**.
   3.2. With the valve stem side of the wheel up, use a tire tool to carefully start the upper bead over the edge of the wheel rim (**Figure 7-1, Page 7-2, Detail B)**. **See following CAUTION.**

CAUTION

- **To avoid damage to the tire, do not use excessive force when starting the bead over the edge of the rim.**

   3.3. When top bead is free of the rim, pull the bead from the bottom side of the rim up into the upper part of the rim well. Insert the tire tool under the lower bead as shown (**Figure 7-1, Page 7-2, Detail C)** and carefully pry the lower bead over the rim flange.
   3.4. Once the lower bead is started over the rim flange, the tire can be removed from the rim by hand.

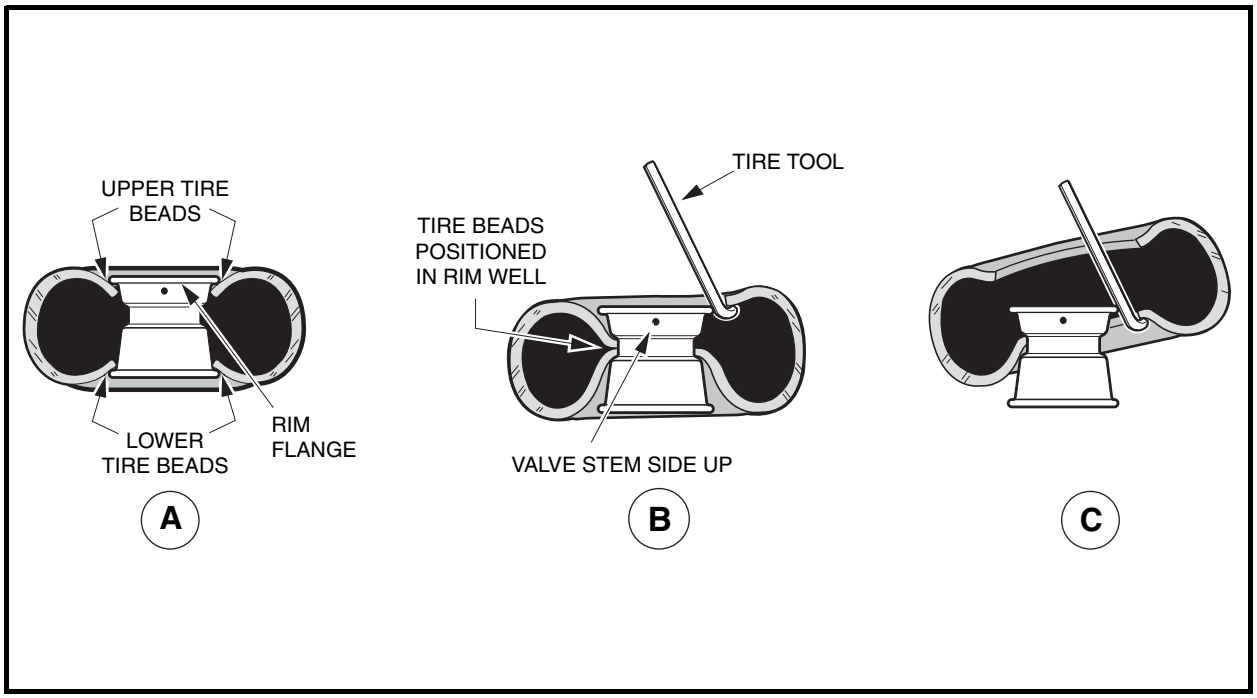

Figure 7-1 Tire Removal

TIRE REPAIR

1. Determine the location and cause of the air leak.
   1.1. Remove the wheel as instructed. **See Wheel Removal on page 7-1.** Inflate the tire to no more than 20 psi (1.38 Bars).
   1.2. Immerse the tire in water and then mark the point where bubbles are formed by escaping air.
   1.3. Determine the cause of the air leak and repair as required. **See following NOTE.**

NOTE: *An air leak could be due to a punctured tire, faulty valve core, improperly seated valve stem, or improperly seated tire bead.*

Small holes in the tire can be plugged using a standard automotive tubeless tire repair kit available at auto supply stores.

TIRE INSTALLATION

⚠ WARNING

- **While mounting or inflating tire, keep hands, fingers, etc. from exposed areas between the tire bead and rim.**

1. Clean both tire beads to remove dirt or other foreign matter.
2. Where the tire beads seat, clean the rim with a wire brush. Wipe away any debris with a clean cloth. **See following NOTE.**

NOTE: *Because tubeless tires require a perfect seal in order to seat, keeping the tire and rim clean is very important.*

3. Apply a light coating of tire mounting lubricant (soap and water solution) to both tire beads and rim flanges.
4. Install the tire on the rim from the valve stem side. If there is no tire machine available, use a rubber mallet and tire iron.
5. Remove the valve core and position the tire so both beads are on the rim flange narrow bead seats.
6. Place the tire and wheel assembly against a wall in an upright position and push it against the wall while inflating the tire to 30-34 psi (2.07-2.34 Bars). The three-point contact (wall, floor, and hand) will help ensure that beads snap into place and form a proper seal as the tire is inflated **(Figure 7-2, Page 7-4)**. **See following WARNING.**

⚠ WARNING

- **Do not use a compressed air source with pressure over 100 psi (6.90 Bars). Due to the low pressure requirements of a small tire, over-inflation could be reached almost instantly when using a high pressure air supply. Over-inflation could cause the tire to explode, possibly resulting in personal injury.**

Tire Installation, Continued:

7. Quickly remove the air nozzle and install the valve core.

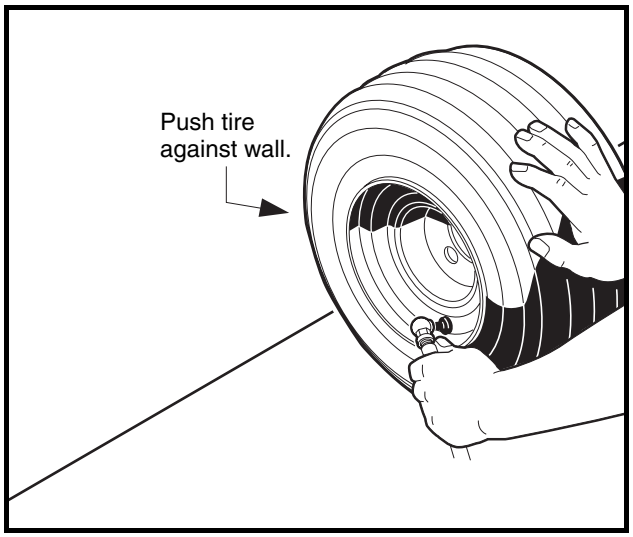

Figure 7-2 Inflate Tire

8. Adjust air pressure in the tire to:
   - 16-18 psi (1.10-1.24 Bars) for Turf 1 and Carryall 1 gasoline vehicles
   - 18-20 psi (1.24-1.38 Bars) for Turf 1 and Carryall 1 electric vehicles
   - 30-34 psi (2.07-2.34 Bars) for all other vehicles.
9. Immerse the wheel and tire assembly in water to make sure there are no leaks.

SECTION 8 – REAR SUSPENSION

⚠ DANGER

- **See General Warning, Section 1, Page 1-1.**

⚠ WARNING

- **See General Warning, Section 1, Page 1-1.**

GENERAL INFORMATION

The rear suspension and powertrain of the vehicle move independently from the vehicle frame. The suspension includes two multi-leaf springs controlled by two hydraulic shock absorbers mounted between the spring mounting plate and the frame. On the gasoline vehicle, the engine is mounted on an engine mounting plate that moves with the suspension. At the front of the mounting plate, a snubber limits the mounting plate motion. The rear suspension on the gasoline Turf 2, 6, Carryall 2, 2 Plus and 6 vehicles also includes a stabilizer bar that reduces side-to-side sway.

SHOCK ABSORBERS

See General Warning, Section 1, Page 1-1.

SHOCK ABSORBER INSPECTION AND REMOVAL

1. Check shock absorbers (7) for damage and fluid leakage around the lower housing of the shock absorber body. Replace damaged or leaking shock absorbers **(Figure 8-3, Page 8-4 or Figure 8-4, Page 8-5)**.
2. To remove a shock absorber (7), remove the nut (5), cup washer (9), and rubber bushing (10) from the upper shock absorber stem.
3. Remove lower mounting hardware (5, 9 and 10) on shock absorber lower mount **(Figure 8-3, Page 8-4 or Figure 8-4, Page 8-5)**. **See also Figure 8-1, Page 8-1.**
4. Compress the shock absorber to remove it.

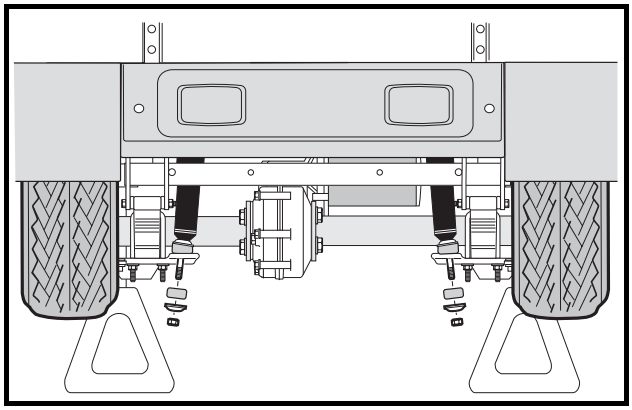

Figure 8-1 Shock Absorber Removal

SHOCK ABSORBER INSTALLATION

NOTE: *When installing shock absorbers, make sure front shocks have identical part numbers and rear shocks have identical part numbers.*

1. Install shock absorber in the reverse order of removal.
2. On the upper shock absorber mount, tighten nut (5) until rubber bushing (10) expands to size of cup washer (9) **(Figure 8-3, Page 8-4 or Figure 8-4, Page 8-5)**.
3. On the lower shock absorber mount, install mounting hardware. Tighten the nut (5) until the rubber bushing (10) expands to the same diameter as the cup washer.

MULTI-LEAF SPRINGS

See General Warning, Section 1, Page 1-1.

NOTE: *Turf 1 and Carryall 1 vehicles are equipped with jounce bumpers **(Figure 8-3, Page 8-4)**.*

MULTI-LEAF SPRING REMOVAL

1. Loosen the lug nuts on the wheel(s) to be removed.
2. Place chocks at the front wheels and lift rear of vehicle with a chain hoist or floor jack **(Figure 8-2, Page 8-2)**. Position jack stands under the frame crossmember between the rear leaf spring front frame mount and the side stringer, just forward of each rear wheel. Lower the vehicle to let the jack stands support the vehicle**. See WARNING "Lift only one end of the vehicle..." in General Warning, Section 1, Page 1-1.**

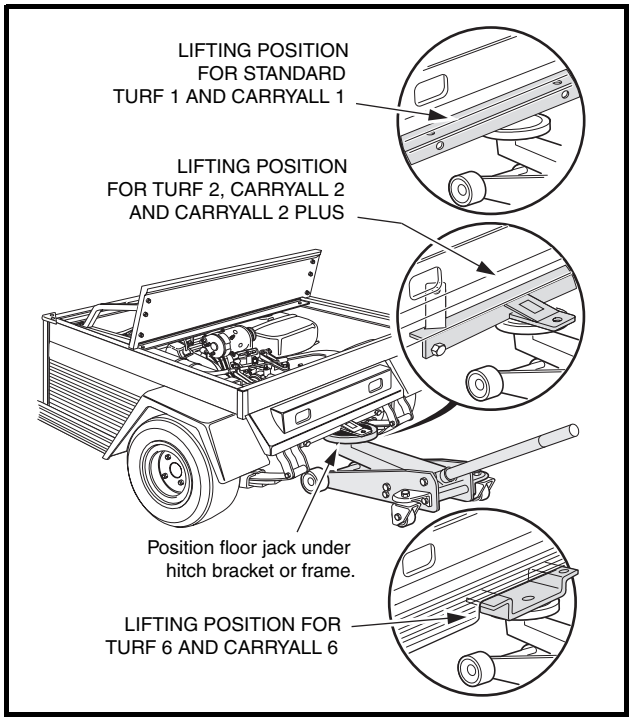

Figure 8-2 Lift Vehicle

3. Place a floor jack under the transaxle housing to support (but not lift) the powertrain. Raise it just enough to relieve tension on the shock absorbers without compressing them.

4. Remove tire and wheel assembly on the side from which the spring is to be removed. Thread one lug nut onto a stud on the rear hub. This will keep the brake drum on the hub.

5. Remove lower nut (5), cup washer (9), and rubber bushing (10) from shock absorber (7) **(Figure 8-3, Page 8-4 or Figure 8-4, Page 8-5)**.

6. **Turf 1 and Carryall 1 vehicles:**

   6.1. Remove the lock nuts (14) and flat washers (13) (if present) attaching the U-bolt (11) to the shock mount bracket (16). Remove jounce bumper mount (20) and spacer (21) **(Figure 8-3, Page 8-4)**.

   6.2. Allow shock mount bracket (16) to rotate downward and remove spring retainer (22). Do not disconnect brake cable from bracket **(Figure 8-3, Page 8-4)**.

7. **All Turf and Carryall vehicles except Turf 1 and Carryall 1:** Remove the lock nuts (14) attaching the U-bolt (11) to the shock mount bracket (16). Do not disconnect brake cable from bracket **(Figure 8-4, Page 8-5)**.

8. Raise axle with floor jack until axle saddle (23) is 1 inch (2.5 cm) above spring **(Figure 8-3, Page 8-4)**.

9. Remove bolt (15) and lock nut (2) attaching the leaf spring (12) to the rear shackle (1) **(Figure 8-3, Page 8-4 or Figure 8-4, Page 8-5)**.

10. Allow rear of leaf spring (12) to rest on the ground and remove the bolt (24) and lock nut (25) attaching the front of the spring to the vehicle frame **(Figure 8-3, Page 8-4 or Figure 8-4, Page 8-5)**. Remove spring from vehicle.

11. Inspect the rubber bushings (4) and steel sleeves (3) in the spring eyes and replace them if they are worn or damaged **(Figure 8-3, Page 8-4 or Figure 8-4, Page 8-5)**.

MULTI-LEAF SPRING INSTALLATION

NOTE: *When installing rear leaf springs, make sure that both springs have identical part numbers.*

1. Install rubber bushings (4) and steel sleeves (3) into leaf spring eyes if bushings were removed **(Figure 8-3, Page 8-4 or Figure 8-4, Page 8-5)**.

2. Place front of leaf spring (12) into vehicle frame and insert bolt (24) through frame and leaf spring eye. Install lock nut (25) and tighten to 15 ft-lb (20.3 N·m).

3. Align the other end of leaf spring with the holes in the spring shackles (1). Insert bolt (15) through leaf spring eye and shackles. Install lock nut (2) and tighten to 15 ft-lb (20.3 N·m). Lower transaxle onto leaf spring (12). **See following CAUTION.**

CAUTION

- **When placing transaxle on spring, be sure to position locating bolt on the spring in the locating hole in the transaxle saddle (23) (Figure 8-3, Page 8-4).**

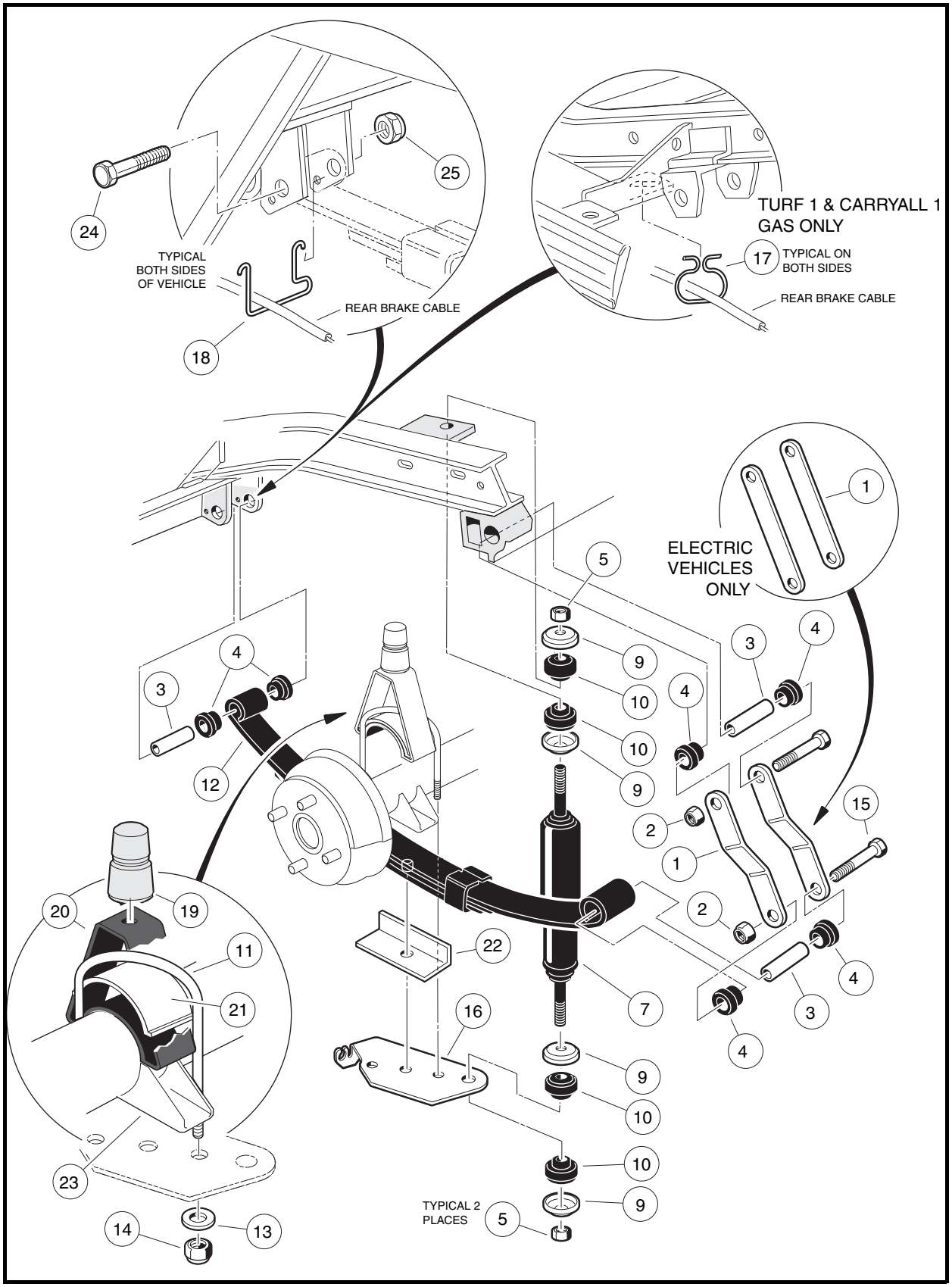

Figure 8-3 Rear Suspension – Turf 1 and Carryall 1 Vehicles

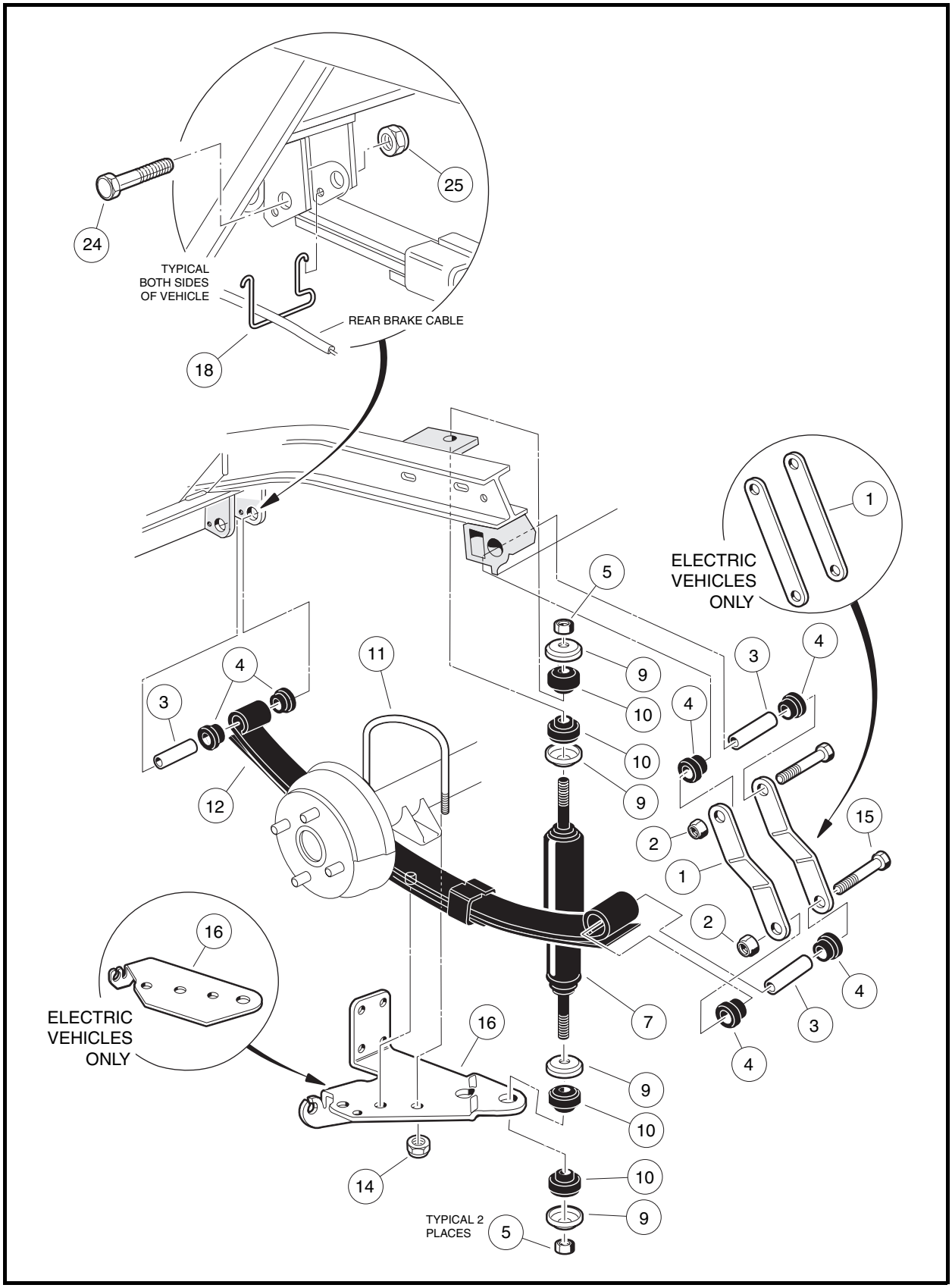

Figure 8-4 Rear Suspension – All Turf and Carryall Vehicles Except Turf 1 and Carryall 1

Multi-Leaf Spring Installation, Continued:

4. **Turf 1 and Carryall 1 vehicles:**
   4.1. Install spring retainer (22) and shock mount bracket (16) onto locating bolt at bottom center of leaf-spring **(Figure 8-3, Page 8-4)**. **See preceding CAUTION.**
   4.2. Position jounce bumper mount (20) with spacer (21) onto axle tube. Install U-bolt (11), flat washers (13) (if present), and lock nuts (14). Tighten U-bolt to 25 ft-lb (34 N·m) **(Figure 8-3, Page 8-4)**.
5. **All Turf and Carryall vehicles except Turf 1 and Carryall 1:** Install shock mount bracket (16) onto locating bolt at bottom center of leaf-spring **(Figure 8-4, Page 8-5)**. **See following NOTE.**
   5.1. Install U-bolt (11) and lock nuts (14). Tighten U-bolt to 25 ft-lb (34 N·m) **(Figure 8-4, Page 8-5)**.
6. Install shock absorber. **See Shock Absorber Installation on page 8-2. See following NOTE.**

NOTE: *When installing shock absorbers, make sure rear shocks have identical part numbers.*

SNUBBER

See General Warning, Section 1, Page 1-1.

NOTE: *The snubber is installed on the gasoline vehicle only.*

SNUBBER REMOVAL

1. Support the powertrain with a floor jack under the engine mounting plate so that the snubber is raised slightly and does not rest on the vehicle frame.
2. Remove the two bolts (2) and two lock nuts (1) securing the snubber bracket to the engine mounting plate **(Figure 8-5, Page 8-6)**.
3. Slide snubber and bracket assembly toward battery to remove it from vehicle.

SNUBBER INSTALLATION

1. Install in the reverse order of removal.
2. Tighten snubber bracket mounting nuts (1) to 13 ft-lb (17.6 N·m) **(Figure 8-5, Page 8-6)**.

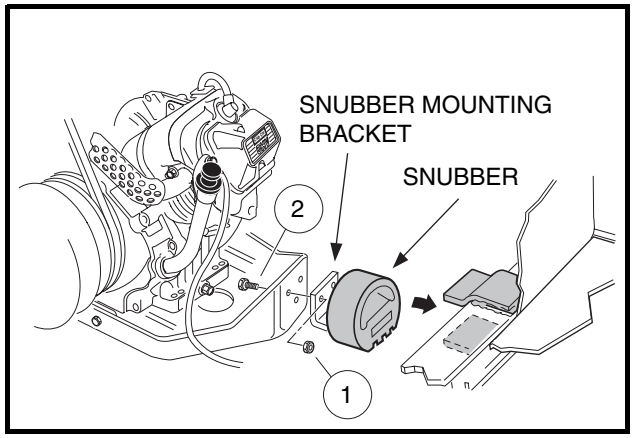

Figure 8-5 Snubber Brackets

STABILIZER BAR

See General Warning, Section 1, Page 1-1.

NOTE: *A stabilizer bar is installed on gasoline Turf 2, Turf 6, Carryall 2, Carryall 2 Plus and Carryall 6 vehicles.*

STABILIZER BAR REMOVAL

1. Place chocks at the front wheels and lift the rear of the vehicle with a chain hoist or floor jack. Position jack stands under the frame crossmember between the spring mount and the side stringer, just forward of each rear wheel. Lower vehicle to let the jack stands support the vehicle. **See General Warning, Section 1, Page 1-1.**
2. Remove bolt (6), lock washer (7), flat washers (4), compression mounts (3), and spacer (2) from left and right stabilizer bar links (5). Do not remove the stabilizer bar links from frame **(Figure 8-6, Page 8-7).**

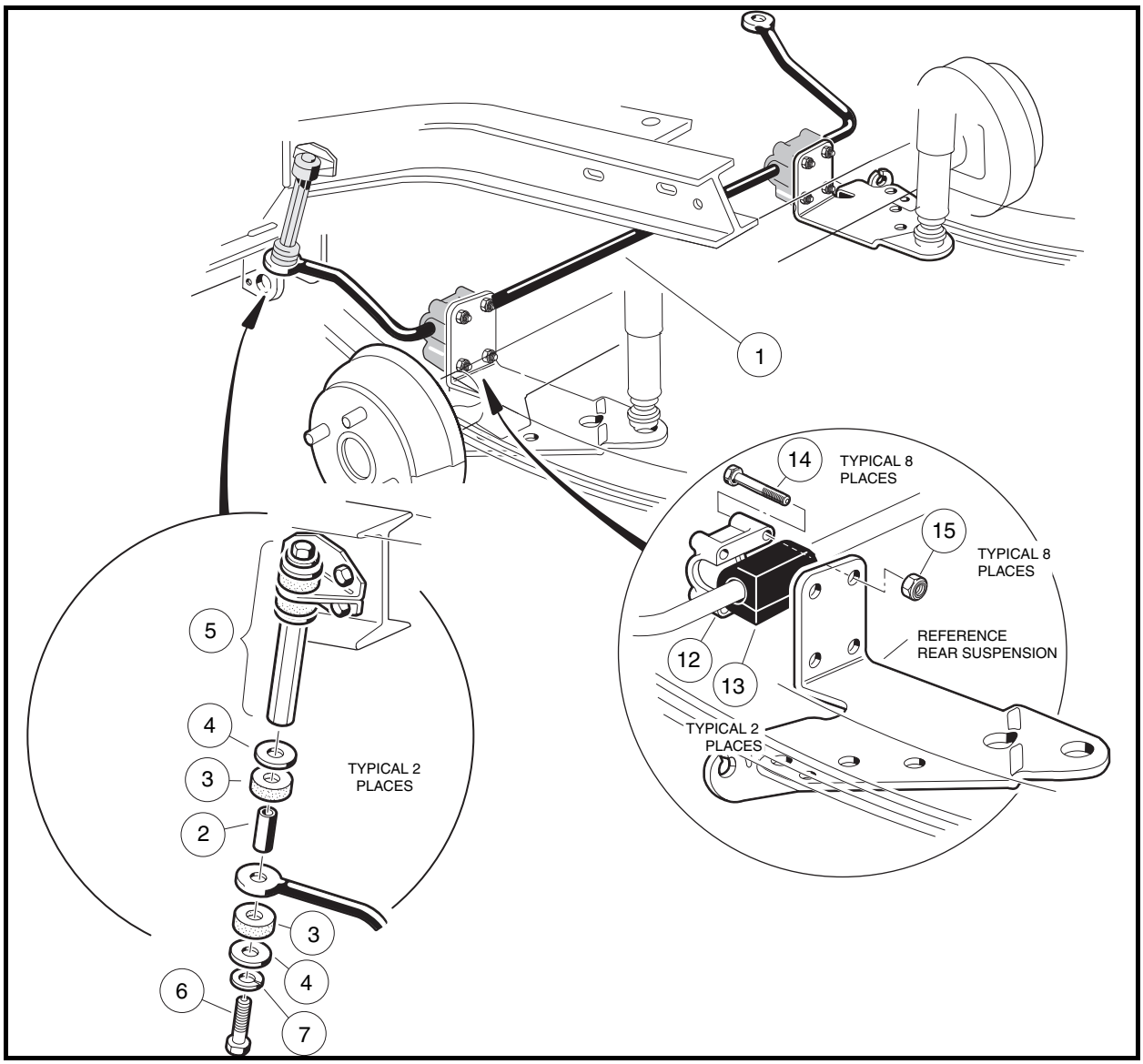

Figure 8-6 Stabilizer Bar

Stabilizer Bar Removal, Continued:

3. Remove bolts (14) and lock nuts (15) from the left and right stabilizer bar bushing support (12) and remove supports and stabilizer bar (1) from vehicle.
4. Remove bushings (13) from stabilizer bar (1).

STABILIZER BAR INSTALLATION

1. Position stabilizer bar at the transaxle mounting brackets. Install a bushing (13) onto bar, making sure the bushing is located in the center of the four mounting holes in the bracket **(Figure 8-6, Page 8-7)**.
2. Place the bushing support (12) onto the bushing. Install four hex-head bolts (14) through the bushing support and transaxle mounting bracket.
3. Install four lock nuts (15) and tighten to 75 in-lb (8.4 N·m).
4. Repeat steps 1, 2, and 3 for the other side of the stabilizer bar.
5. Place lock washer (7), flat washer (4), spacer (2), and compression mount (3) onto bolt (6). Install bolt through mounting hole in stabilizer bar and place another compression mount (3) and flat washer (4) onto bolt **(Figure 8-6, Page 8-7)**.
6. Install the bolt (6) with hardware into the stabilizer bar link (5) and finger-tighten.
7. Repeat steps 5 and 6 for the other side of the stabilizer bar.
8. Tighten bolts (6) in the stabilizer bar links (5) to 17 ft-lb (23 N·m).
9. Place jack under transaxle and raise vehicle enough to remove jack stands. Lower the vehicle to the ground.

JOUNCE BUMPERS

See General Warning, Section 1, Page 1-1.

JOUNCE BUMPER REMOVAL

1. Grip jounce bumper (19) and pull from bumper mount (20) **(Figure 8-3, Page 8-4)**.

JOUNCE BUMPER INSTALLATION

1. Insert jounce bumper (19) into bumper mount (20) **(Figure 8-3, Page 8-4)**. Make sure the entire circumference of bumper is seated firmly in mounting hole.

SECTION 9 – STEERING AND FRONT SUSPENSION

⚠ DANGER

- **See General Warning, Section 1, Page 1-1.**

⚠ WARNING

- **See General Warning, Section 1, Page 1-1.**

GENERAL INFORMATION

Steering is controlled through a rack and pinion steering assembly that is connected by a steering column to a steering wheel. No manual adjustment to the rack and pinion gear assembly is required. A spring loaded self-adjusting mechanism is incorporated into the assembly.

STEERING WHEEL

See General Warning, Section 1, Page 1-1.

STEERING WHEEL REMOVAL

1. Disconnect the battery cables as instructed. **See WARNING "To avoid unintentionally starting..." in General Warning, Section 1, Page 1-2.**
2. Remove the two mounting screws (30) and plate (28) **(Figure 9-3, Page 9-3)**.
3. Match mark the steering wheel (25) and steering column shaft (19) so when the steering wheel is removed it can be placed back in exactly the same position on steering column shaft **(Figure 9-3, Page 9-3)**.
4. Loosen the steering wheel nut (27) and back it off approximately 1/4 inch (6 mm). Do not remove the nut **(Figure 9-3, Page 9-3)**.
5. Use the steering wheel puller (CCI P/N 102061201) to remove steering wheel.
   - 5.1. Place the puller anvil (4) through the top opening of the steering wheel **(Figure 9-1, Page 9-2)**.
   - 5.2. Insert the anvil feet through the two slots in the base plate (marked "B") (5) as shown **(Figure 9-1, Page 9-2)**.
   - 5.3. Rotate the anvil screw (6) clockwise until the base plate contacts the bottom of the steering wheel where it attaches to the steering column **(Figure 9-2, Page 9-2)**.
   - 5.4. Using a 1/2-inch drive air impact wrench, tighten the anvil screw (6) until the steering wheel breaks free from the steering shaft.

Steering Wheel Removal, Continued:

5.5. Remove the steering wheel puller.

5.6. Remove the steering wheel nut (27) and the steering wheel (25) from the steering column (20) **(Figure 9-3, Page 9-3)**.

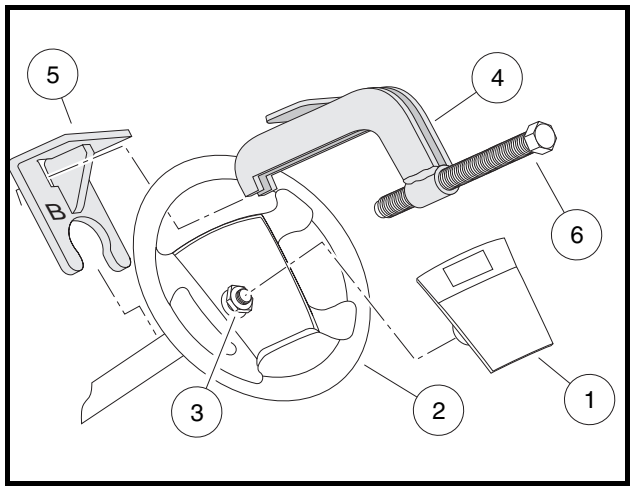

Figure 9-1 Steering Wheel Puller

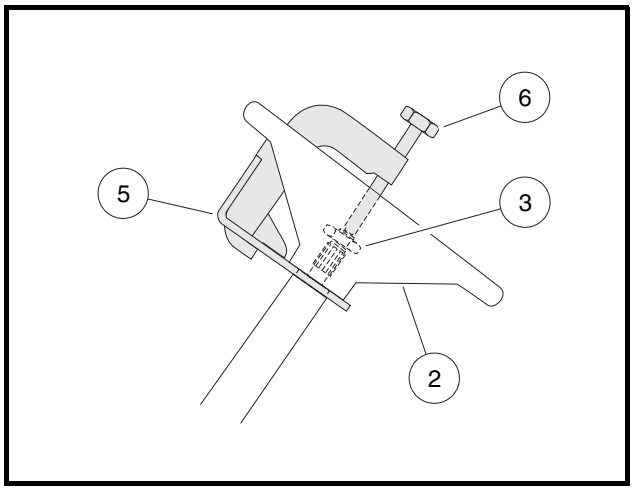

Figure 9-2 Steering Wheel Puller

STEERING WHEEL INSTALLATION

NOTE: *To minimize corrosion and to make future removal of the steering wheel easier, apply a small amount of oil or anti-seize compound to steering shaft splines and taper before installing the steering wheel.*

1. Install the steering wheel (25) on the splines of the steering shaft (19). Be sure to align the match marks placed on the wheel and steering column in step 3 above **(Figure 9-3, Page 9-3)**.
2. Install the steering wheel nut (27) and tighten to 13 ft-lb (17.6 N·m).
3. Install the steering wheel plate (28) and plate mounting screws (30) **(Figure 9-3, Page 9-3)**. Tighten screws to 16 in-lb (1.8 N·m).

STEERING COLUMN

See General Warning, Section 1, Page 1-1.

STEERING COLUMN REMOVAL

1. Remove the steering wheel as previously instructed.
2. Remove the front body. **See Front Body Removal, Section 4, Page 4-3.**

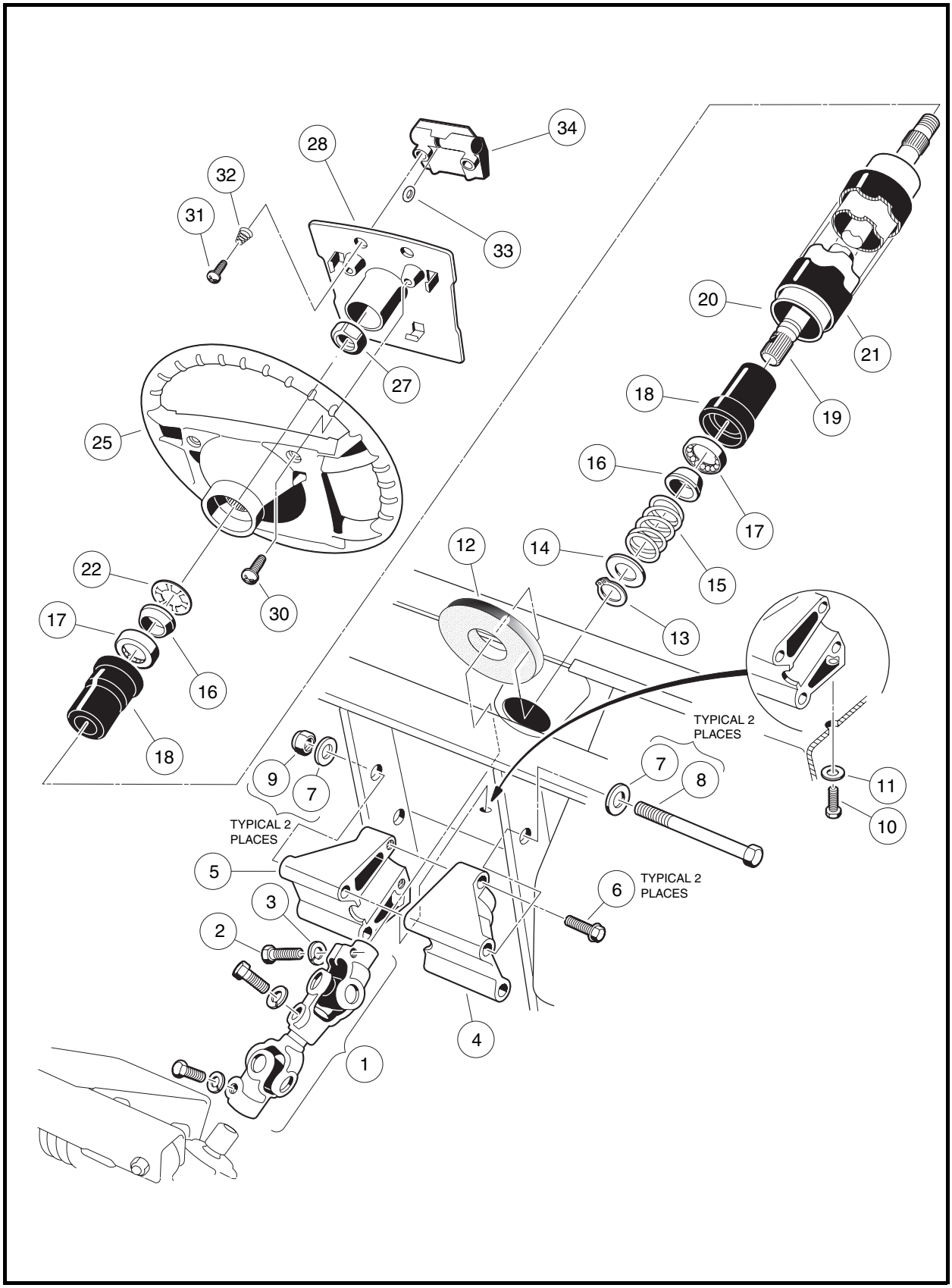

Figure 9-3 Steering Column

Steering Column Removal, Continued:

3. Remove the center dash panel **(Figure 9-4, Page 9-4)**.
   3.1. Remove the plastic cap (1) covering the mounting screw (2) on each side of the center dash panel (3) **(Figure 9-4, Page 9-4)**.
   3.2. Loosen, but do not remove, the screw (2) on each side of the center dash panel (3).
   3.3. Insert screwdriver at the top center of the dash between dash and cowl brace. Gently pry center dash out slightly from under edge of cowl brace.
   3.4. Pull center dash out from the frame and disconnect the wires from the electrical components mounted on the dash panel. Do not allow wires to touch. **See following NOTE.**
   3.5. *Take care to prevent key switch terminals and wires from touching the metal frame around the dash.*
   3.6. Slide center dash panel up the steering column.

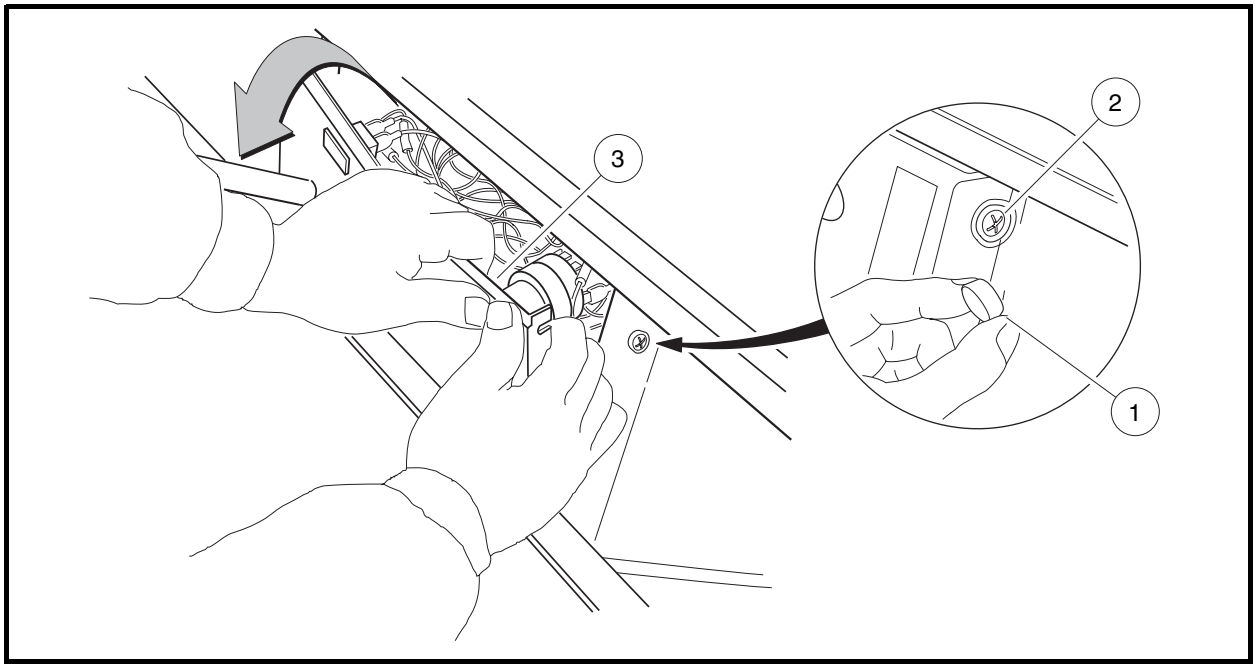

Figure 9-4 Dash Removal

4. Remove the driver-side dash pocket.
   4.1. Remove the flange lock screw from the top of the dash pocket.
   4.2. Drill out the two pop rivets holding the dash pocket in place.
   4.3. Slide dash pocket out of vehicle.
5. Remove the upper bolt (2) and lock washer (3) from the universal joint **(Figure 9-3, Page 9-3)**.
6. Remove the nuts (9), bolts (8 and 10), and washers (7 and 11) from the steering column mount (4 and 5) **(Figure 9-3, Page 9-3)**.
7. Remove the steering column from the vehicle.

STEERING COLUMN DISASSEMBLY

1. Remove bolts (6) and mounts (4 and 5) from steering column. Remove boot (12) **(Figure 9-3, Page 9-3)**.

2. While supporting steering column (20) on a workbench, remove snap ring (13) from shaft. **See following NOTE.**

NOTE: *Do not allow the steering shaft to slide out of the steering tube when removing the snap ring.*

3. Remove the washer (14), spring (15), and wedge (16).
4. Turn the steering column over and slide the shaft out of the tube to expose the retaining ring (22). Use pliers to twist the retaining ring (22) until it breaks off, then remove the wedge (16).
5. Remove the shaft (19) from the bottom of the tube (20).
6. Use steering shaft (19) to push bearing seat (18) out from the opposite end of the steering tube (20).
7. Insert a flat blade screwdriver between the bottom of the outer race of the bearing (17) and the bottom lip of the bearing seat (18) and remove the bearing (17). **See following NOTE.**

NOTE: *Use new retaining rings and bearings for reassembly.*

STEERING COLUMN ASSEMBLY

1. Insert bearing seat (18) into both ends of steering tube (20). Place a block of wood on bearing seat and tap lightly on block until bearing seat (18) is fully seated in steering tube (20) **(Figure 9-5, Page 9-6)**.
2. Press the bearing (17) all the way into the bearing seat (18) using a steering column bearing press tool (CCI P/N 1014264) or a metal tube approximately six inches (15.2 cm) long with a maximum outer diameter of 1-3/16 inches (3.3 cm) and a minimum inside diameter of 7/8 inch (2.2 cm). Be sure the bearing is installed in the bearing seat as shown **(Figure 9-5, Page 9-6)** so the wedge (16) will ride against the inner race of the bearing.
3. Install the wedge (16), spring (15), washer (14), and snap ring (13) onto the bottom end of the steering shaft (19) **(Figure 9-5, Page 9-6)**.
4. Insert the shaft (19) from the bottom of the steering tube (20) **(Figure 9-3, Page 9-3)**.
5. Turn the assembly over and place the shaft (19) on a bench. Install the wedge (16) and retaining ring (22) onto the top of the shaft. Be sure the prongs on the retaining ring face up and away from the wedge. Use a steering column retaining ring tool (CCI P/N 1014259) to seat the retaining ring to the proper depth. Support end of tube while pressing. If you do not have the recommended tool, use the same tube as was used in step 2 to press the retaining ring onto the top of the shaft. The retaining ring should be pressed onto the shaft until 2 to 2-1/8 inches (5.1-5.4 cm) of the shaft extends from the top of the bearing seat in the steering tube **(Figure 9-6, Page 9-6)**.

STEERING COLUMN INSTALLATION

1. Install boot (12). Reinstall mount (4 and 5) onto the end of the steering column. Tighten bolts (6) to 20 ft-lb (27 N·m) **(Figure 9-3, Page 9-3)**.

Steering Column Installation, Continued:

2. For ease of assembly and to prevent corrosion, apply a light coat of anti-seize or lubricating compound to both splined ends of the steering shaft.

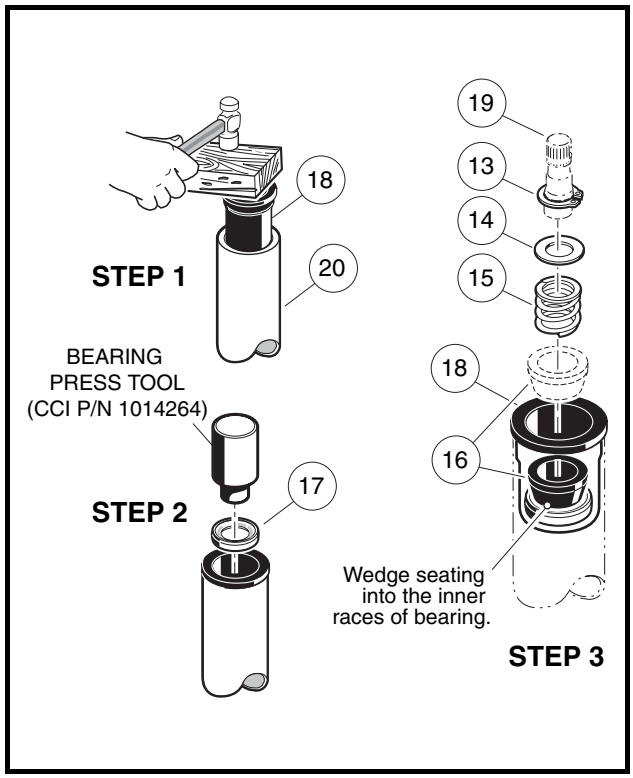

Figure 9-5 Steering Shaft – Bottom End

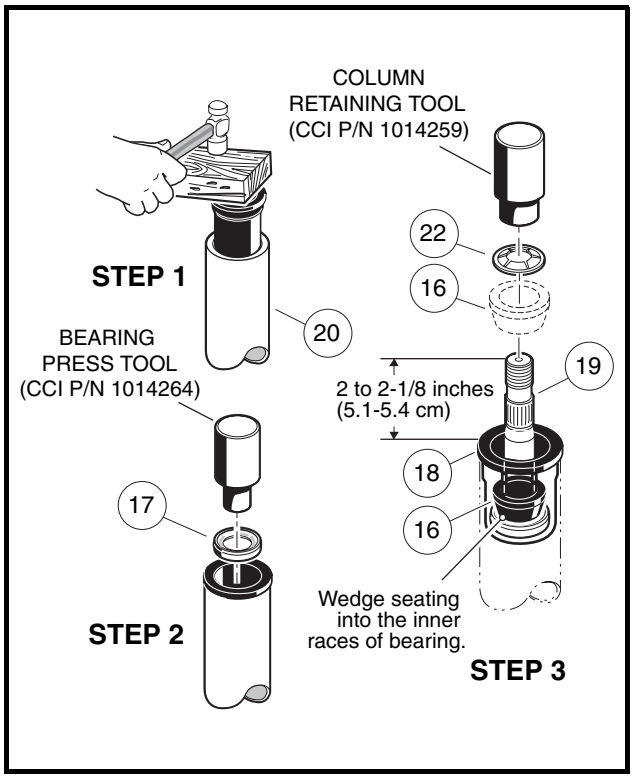

Figure 9-6 Steering Shaft – Top End

3. Position the steering column assembly in the vehicle while inserting the steering column shaft into the upper universal joint (1). The flat portion of the steering shaft spline (19) must be aligned with the bolt hole in the universal joint (1) before sliding the spline into the universal joint. While holding the steering column in place, attach it to the frame using bolts (8), washers (7), and nuts (9) **(Figure 9-3, Page 9-3)**. Thread the nuts onto the bolts but do not tighten them.

4. Install washer (11) and screw (10). Tighten to 20 ft-lb (27 N·m) **(Figure 9-3, Page 9-3)**.

5. Install the bolt (2) and lock washer (3) on the upper universal joint and finger-tighten.

6. Tighten the two nuts (9) and bolts (8) to 18 ft-lb (24.4 N·m) **(Figure 9-3, Page 9-3)**.

7. Tighten the bolt (2) on the upper universal joint to 15 ft-lb (20 N·m) **(Figure 9-3, Page 9-3)**.

8. Check the other two bolts of the universal joint (1) to ensure that they are properly tightened to 15 ft-lb (20 N·m) **(Figure 9-3, Page 9-3)**.

9. Reinstall dash pocket and related hardware.

10. Reinstall center dash panel in reverse order of disassembly. Make sure the key switch terminals do not touch the frame and the center dash panel is properly seated and snapped into place.

11. Install front body and bumper. **See Front Body Installation, Section 4, Page 4-4.**

STEERING ADJUSTMENT

See General Warning, Section 1, Page 1-1.

1. Turn the steering wheel all the way to the right. Note the distance between the passenger side spindle stop (2) and passenger side A-plate (3) **(Figure 9-7, Page 9-8).** The internal stop on the rack must reach its limit of travel against rack and pinion housing at exactly the same time the spindle stops against the passenger side A-plate (with vehicle wheels turned to the right). If simultaneous contact occurs, steering is in correct adjustment; proceed to step 4. If simultaneous contact does not occur, proceed to step 2.

2. Loosen the nuts (27 and 29) and turn the drag link (28) **(Figure 9-12, Page 9-10)** to adjust the drag link rod. Adjust the link rod with the steering wheel turned all the way to the right, so the passenger side spindle stop lightly touches the passenger side A-plate. The internal stop on the rack must reach its limit of travel at the same time the spindle stops against the passenger side A-plate (with vehicle wheels turned to the right). **See following CAUTION.**

CAUTION

- **The drag link has both left and right-hand threads. The end of the drag link toward the spindle has left-hand threads, and the end toward the rack has right-hand threads. To prevent damage to threaded parts, care should be taken when servicing the drag link.**

3. When all adjustments have been completed, tighten the nuts (27 and 29) on the drag link assembly with an open end wrench. Tighten nuts to 21 ft-lb (28.4 N·m) **(Figure 9-12, Page 9-10)**. **See following CAUTION.**

CAUTION

- **When tightening the nuts (27 and 29), make sure the drag link (28) does not turn (Figure 9-12, Page 9-10).**

4. Straighten wheels and turn steering wheel from lock to lock. Wheels should turn smoothly and easily. If steering wheel does not turn smoothly and easily, inspect steering assemblies as follows:

- ball joints (23) **(Figure 9-12, Page 9-10)** and (6 and 13) **(Figure 9-21, Page 9-18 or Figure 9-23, Page 9-20)**
- spindle bushings (3 and 4) **(Figure 9-22, Page 9-19 or Figure 9-24, Page 9-21)**
- wave washers (20) **(Figure 9-22, Page 9-19 or Figure 9-24, Page 9-21)**
- rack assembly (17) **(Figure 9-12, Page 9-10)**

5. Also inspect front suspension assemblies as follows:

- A-plates (1) **(Figure 9-21, Page 9-18 or Figure 9-23, Page 9-20)**
- urethane bushings (2) **(Figure 9-21, Page 9-18 or Figure 9-23, Page 9-20)**
- leaf springs (6) **(Figure 9-22, Page 9-19 or Figure 9-24, Page 9-21)**

6. Replace components as necessary.

RACK AND PINION

See General Warning, Section 1, Page 1-1.

RACK AND PINION REMOVAL

1. Remove the front body. **See Section 4 – Body and Trim.**
2. Remove the cotter pin (22) and ball joint retaining nut (25) **(Figure 9-12, Page 9-10)**.
3. Using a ball joint removal tool, remove the ball joint (23) **(Figure 9-12, Page 9-10)** from the spindle assembly. **See Figure 9-8, Page 9-8.**
4. Remove the bolts (30), washers (31), and lock nuts (32) from the steering rack assembly mounting bracket **(Figure 9-12, Page 9-10)**.
5. Remove the bolt (2) and flat washer (3) on the upper universal joint, then remove the rack assembly and universal joint from the vehicle **(Figure 9-3, Page 9-3)**

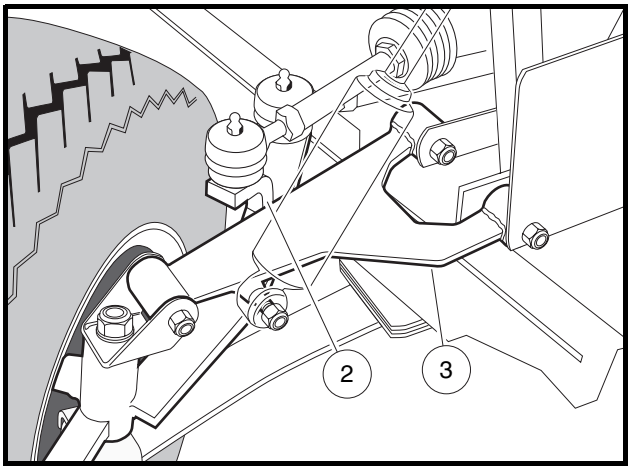

Figure 9-7 Adjust Steering Alignment

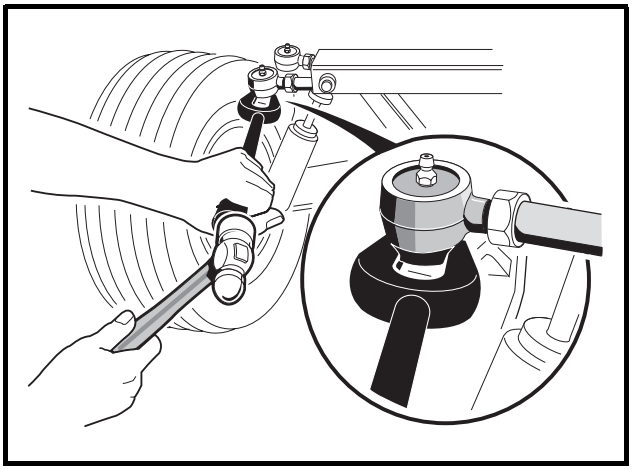

Figure 9-8 Ball Joint Tool

RACK AND PINION DISASSEMBLY

CAUTION

- **The ball joint (23) (Figure 9-12, Page 9-10) has left-hand threads.**

1. Remove ball joint from the spindle and inspect it for excessive wear **(Figure 9-8, Page 9-8)**.
2. Remove the drag link (28) **(Figure 9-12, Page 9-10)**.
3. Remove both bellows clamps (2) (plastic wire ties).
4. Remove the hex nut (29) and slide off the dust seal bellows (1).
5. Remove the retaining ring (21), then slide off dust seal bellows (20).
6. Remove the rack screw lock nut (15), rack guide screw (16), rack guide pressure spring (14), and the rack guide (13) **(Figure 9-12, Page 9-10)**.
7. Remove the universal joint assembly from the pinion (8) by fully removing the bolt and then sliding off the universal joint.

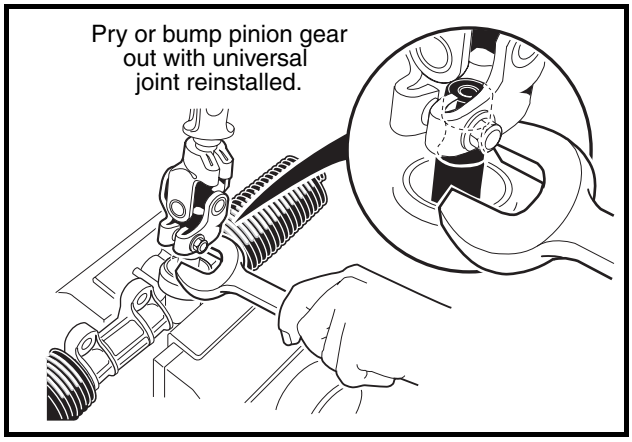

Figure 9-9 Remove Pinion from Housing

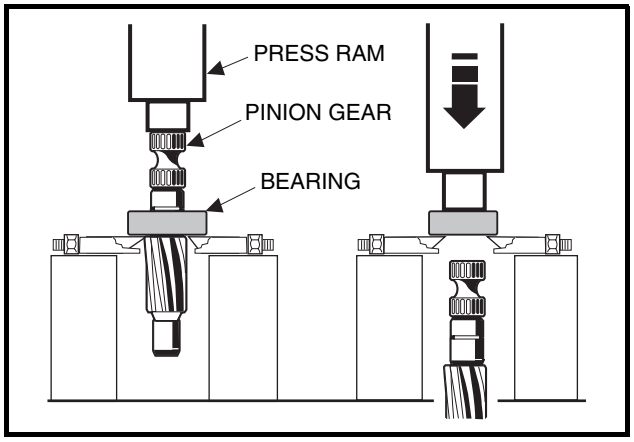

Figure 9-10 Remove Bearing from Pinion

8. If necessary, remove the dust seal (12). **See following NOTE.**

NOTE: *If the dust seal (12) is removed, replace with a new one.*

9. Use snap ring pliers to remove the internal snap ring (11) **(Figure 9-12, Page 9-10)**.
10. Install the universal joint onto the pinion and place a large open end wrench under the universal joint **(Figure 9-9, Page 9-9)**. Use the wrench as a lever to pull the pinion from the housing.
11. If the ball bearing (9) has been damaged, remove the external snap ring (10) **(Figure 9-12, Page 9-10)** and press the bearing off **(Figure 9-10, Page 9-9)**.
12. Remove retaining ring (19) and stop washer (18), then remove rack (17) from housing (6) **(Figure 9-12, Page 9-10)**.
13. If the inner ball joint (3) is excessively worn, remove the ball joint and tab washer (4) from the rack **(Figure 9-11, Page 9-9)**.
    13.1. Secure the rack in a vise using wood blocks between the rack and the jaws of the vise to protect the rack from damage **(Figure 9-11, Page 9-9)**.
    13.2. Loosen and remove the inner ball joint with a wrench.

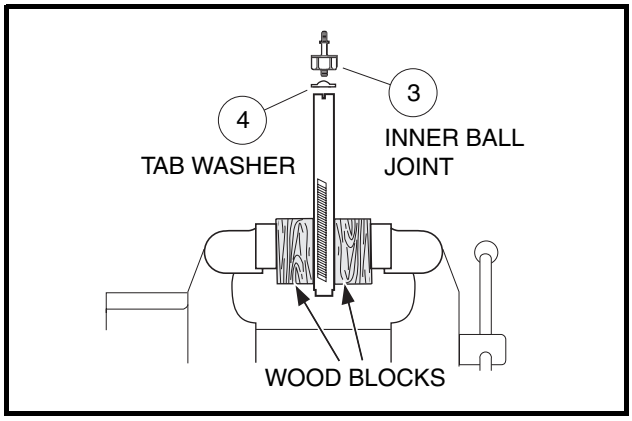

Figure 9-11 Secure Rack in Vise

14. Inspect the bushing (5) for excessive wear. If wear is excessive, replace the steering box assembly (CCI P/N 101878302) **(Figure 9-12, Page 9-10)**.

RACK AND PINION ASSEMBLY

1. Install a new tab washer (4) and an inner ball joint (3) **(Figure 9-11, Page 9-9)**. Install the ball joint onto the rack by securing the rack in a vise using wood blocks between the rack and the jaws of the vise to protect the rack from damage. Tighten the ball joint to 60 ft-lb (81 N·m).
2. Bend the edges of the tab washer (4) up against the ball joint (3) **(Figure 9-11, Page 9-9)**.
3. Apply a light coating of EP grease to the teeth of the rack (17), then slide the rack through the bushing (5) and housing (6). Install the stop washer (18) and retaining ring (19) to the end of the rack **(Figure 9-12, Page 9-10)**.

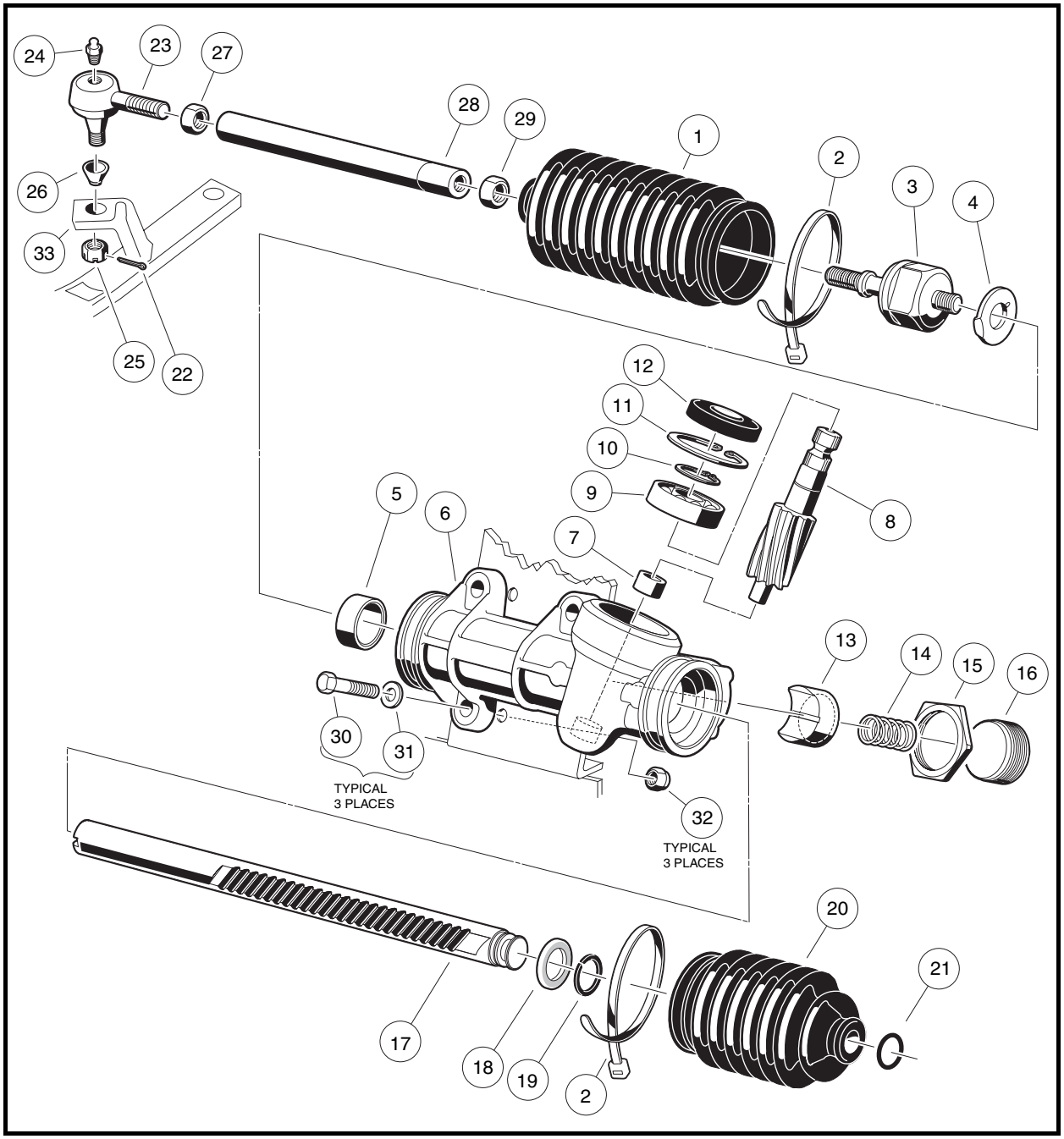

Figure 9-12 Steering Gear

CAUTION

- **In step 4, do not press against the outer race of the bearing.**

4. If the bearing (9) was removed, press on a new bearing, exerting all pressure on the inner race (grease the bearing before installing it). Then install the external snap ring (10) **(Figure 9-12, Page 9-10)**. **See preceding CAUTION.**
5. If the needle bearing (7) is damaged, the steering box assembly (CCI P/N 101878302) must be replaced **(Figure 9-12, Page 9-10)**.
6. Install pinion (8) and bearing (9) assembly into the housing (6) **(Figure 9-12, Page 9-10)**. Make sure the rack gear teeth will mesh with the gear teeth on the pinion. The rack may need to be rotated slightly while lightly tapping on the pinion-bearing assembly with a rubber mallet. **See following CAUTION**.

CAUTION

- **Do not force the pinion-bearing assembly into the housing. The gear teeth or the small bearing could be damaged.**

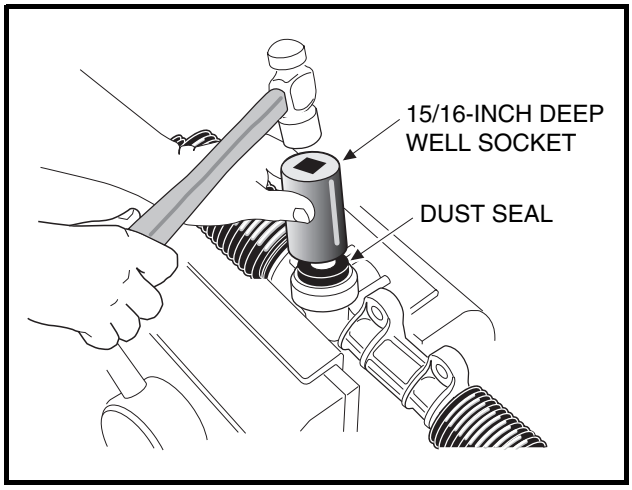

Figure 9-13 Press In Dust Seal

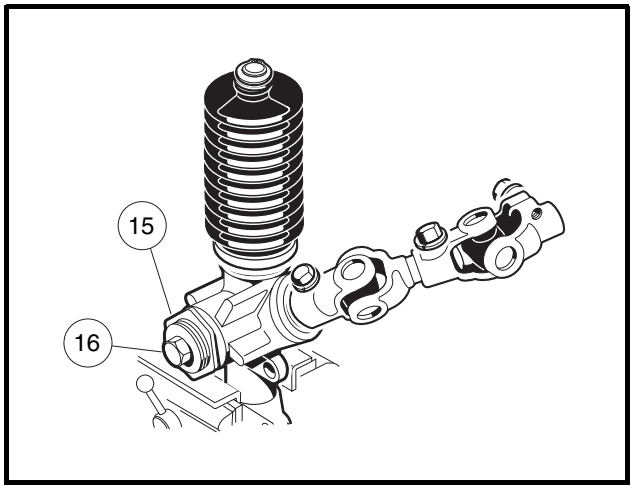

Figure 9-14 Rack and Pinion Adjustment

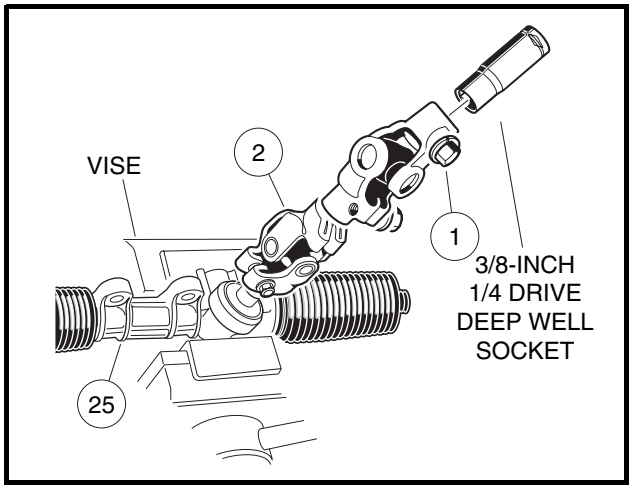

Figure 9-15 Rack and Pinion Resistance

Rack and Pinion Assembly, Continued:

7. Install the internal snap ring (11) **(Figure 9-12, Page 9-10)**.
8. Using a socket to apply pressure evenly, press in a new dust seal **(Figure 9-13, Page 9-11).**
9. Apply a small amount of grease to the rack guide (13) where it comes into contact with the rack (17) **(Figure 9-12, Page 9-10)**.
10. Place a few drops of Loctite® 222 to the threads of the screw (16) **(Figure 9-12, Page 9-10)**.
11. Install the rack guide (13), pressure spring (14), and screw (16). The screw should be threaded in until a rotational torque of 10 in-lb (1.13 N·m) is achieved **(Figure 9-12, Page 9-10)**.
    - 11.1. Reposition the rack and pinion in a vise.
    - 11.2. Insert a 3/8-inch deep well socket into the steering column end of the universal joint (2) and tighten the bolt (1) to 15 ft-lb (20.3 N·m) **(Figure 9-15, Page 9-11)**.
    - 11.3. Use a torque wrench connected to the 3/8-inch deep well socket to measure the resistance of the rack and pinion. Rotational resistance should measure 7 to 15 in-lb (0.8 to 1.7 N·m).
    - 11.4. If measured resistance does not equal 7 to 15 in-lb, loosen the lock nut (15) and tighten the screw (16) until it bottoms out, then back the screw off one quarter turn. Tighten the lock nut to 28 ft-lb (38 N·m) **(Figure 9-14, Page 9-11)**. **See following NOTE.**

NOTE: *When tightening the lock nut (15) make sure the screw (16) does not change adjustment* ***(Figure 9-14, Page 9-11)****.*

12. Install the dust seal bellows (20) and retaining ring (21) **(Figure 9-12, Page 9-10)**.
13. Install the dust seal bellows (1) and hex nut (29) **(Figure 9-12, Page 9-10)**.
14. Install the universal joint on the pinion. Tighten the bolt to 15 ft-lb (20 N·m).
15. Install new bellows clamps (wire ties) (2) **(Figure 9-12, Page 9-10)**.
16. Install the drag link (28) by fully threading the ground end into the inner ball joint (3). **See following CAUTION.**

CAUTION

- **The ball joint (23) (Figure 9-12, Page 9-10) has left-hand threads.**
- **The tie rod and drag link have right-hand threads on one end and left-hand threads on the other end. Right-hand threads are identified by a groove in the tie rod or drag link.**

17. Install the ball joint (23) **(Figure 9-12, Page 9-10)**. **See preceding CAUTION.**

RACK AND PINION INSTALLATION

1. Position the steering gear box assembly on the shock and gear support and install the bolts (30), washers (31), and nuts (32). Do not tighten the mounting bolts **(Figure 9-12, Page 9-10)**.
2. For ease of assembly and to prevent corrosion, apply a light coat of anti-seize and lubricating compound to the splined end of the steering column shaft.
3. Align the flat portion of the steering shaft spline with the bolt hole in the universal joint and then slide the shaft into the upper universal joint. Install the bolt and lock washer on the upper universal joint and tighten it to 15 ft-lb (20 N·m).
4. Tighten the steering rack mounting bolts (30) to 22 ft-lb (29.8 N·m) **(Figure 9-12, Page 9-10)**.
5. Adjust the steering. **See Steering Adjustment on page 9-7.**

TIE ROD AND DRAG LINK

See General Warning, Section 1, Page 1-1.

TIE ROD AND DRAG LINK REMOVAL

1. Using locking pliers to hold tie rod and drag link, loosen jam nuts (7 and 12) on tie rod ball joints **(Figure 9-21, Page 9-18 or Figure 9-23, Page 9-20)** and loosen jam nuts (27 and 29) on the drag link **(Figure 9-12, Page 9-10)**.
2. Remove the cotter pins (22) and ball joint retaining nuts (20) **(Figure 9-21, Page 9-18 or Figure 9-23, Page 9-20)**.
3. Use a ball joint removal tool to remove ball joints (13 and 6) **(Figure 9-21, Page 9-18 or Figure 9-23, Page 9-20)** and (23) **(Figure 9-12, Page 9-10)** from the spindles.
4. Remove the ball joints from the tie rod (11) **(Figure 9-21, Page 9-18 or Figure 9-23, Page 9-20)**.
5. Remove drag link (28) from inner ball joint assembly (3) and drag link ball joint (23) **(Figure 9-12, Page 9-10)**.

TIE ROD AND DRAG LINK INSTALLATION

1. Thread ball joints (6 and 13) into tie rod (11) to a depth of 1/2-inch (12.5 mm) **(Figure 9-21, Page 9-18 or Figure 9-23, Page 9-20)**. **See following WARNING and CAUTION.**

⚠ WARNING

- **The ball joints must be threaded into the rod at least 5/16 of an inch (8 mm). Failure to thread ball joints in deep enough may cause a ball joint to separate from the rod during adjustment or while being operated, possibly resulting in loss of vehicle control and severe personal injury.**

CAUTION

- **The tie rod and drag link have right-hand threads on one end and left-hand threads on the other end. Right-hand threads are identified by a groove in the tie rod or drag link.**

2. Install ball joint ends (6 and 13) into the left and right-hand spindle arms (23), then install the retaining nuts (20) and cotter pins (22) **(Figure 9-21, Page 9-18 or Figure 9-23, Page 9-20)**.
3. Thread the drag link rod (28) all the way onto the threaded stud of the inner ball joint assembly (3) (right-hand threads) **(Figure 9-12, Page 9-10)**.
4. Thread the ball joint (23) into the drag link rod (28) (left-hand threads) to full thread depth **(Figure 9-12, Page 9-10).**
5. Install the ball joint (23) on the spindle arm riser (33), then install the retaining nut and a new cotter pin (22) **(Figure 9-12, Page 9-10)**. Tighten nut to 18 ft-lb (2.0 N·m).
6. Adjust camber and toe-in. **See Camber Adjustment on page 9-14 and Toe-in Adjustment on page 9-15.**
7. Adjust steering. **See Steering Adjustment on page 9-7.**

FRONT SUSPENSION

See General Warning, Section 1, Page 1-1.

LUBRICATION

Five grease fittings are provided (one in each spindle housing, one in the ball joint on each end of the tie rod, and one in the ball joint of the steering drag link). Lubricate these fittings at the recommended interval with the proper lubricant. **See the Periodic Lubrication Schedule in vehicle owner's manual**. **See following CAUTION.**

CAUTION

- **To ensure proper lubrication of the front suspension and steering linkages, raise front of vehicle to lubricate. See General Warning, Section 1, Page 1-1.**

WHEEL ALIGNMENT

Wheel alignment is limited to equalizing the camber angle of each front wheel and adjusting toe-in of the front wheels. There is also a drag link adjustment to equalize the turning radius in both directions. **See Steering Adjustment on page 9-7. See following NOTE.**

NOTE: *Prior to making any front suspension adjustments, inspect components for wear and damage and repair or replace as necessary.*

Camber Adjustment

1. Check each front wheel with a framing square. At the floor (or ground), there should be an equal amount of space between each tire and the framing square **(Figure 9-16, Page 9-14)**.
2. Loosen, but do not remove, the four bolts (30) that secure the leaf spring (6) to the bottom spring plate (29) **(Figure 9-22, Page 9-19 or Figure 9-24, Page 9-21). See also Figure 9-17, Page 9-14.**

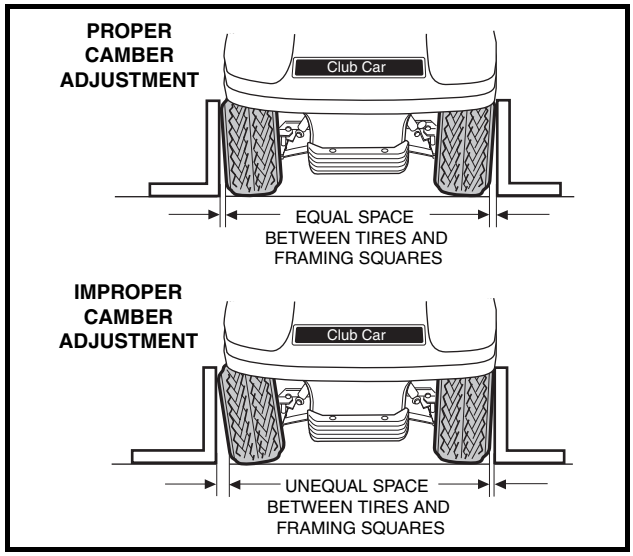

Figure 9-16 Check Camber

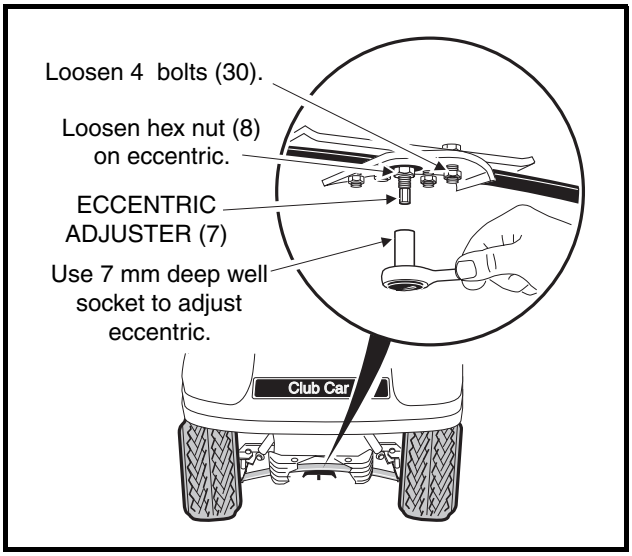

Figure 9-17 Adjust Camber

3. Loosen, but do not remove, the hex nut (8) on the adjustment eccentric (7) **(Figure 9-22, Page 9-19 or Figure 9-24, Page 9-21)** in the center of the spring. **See also Figure 9-17, Page 9-14.**

4. Use a 7 mm deep well socket to rotate the eccentric **(Figure 9-17, Page 9-14)**.

5. After adjusting camber, tighten the four spring retaining bolts (30) **(Figure 9-22, Page 9-19 or Figure 9-24, Page 9-21)** to 23 ft-lb (31 N·m). Then roll the vehicle forward one full tire revolution and recheck the camber. **See also Figure 9-16, Page 9-14**.

6. Tighten the hex nut (8) on the adjustment eccentric (7) to 10 ft-lb (13.5 N·m) **(Figure 9-22, Page 9-19 or Figure 9-24, Page 9-21)**. **See also Figure 9-17, Page 9-14**.

Toe-in Adjustment

1. On a level surface, roll the vehicle forward, then stop. Make sure the front wheels are pointed straight ahead. Do not turn the steering wheel again during this procedure.

2. On each front tire, mark (as closely as possible) the center of the tread face that is oriented toward the rear of the vehicle. The marks should be even with the bottom surfaces of the vehicle frame I-beams.

3. Measure the distance between the marks on the rear-facing surfaces of the tires, and then roll the vehicle **forward** one and one-half wheel revolutions until the marks appear on the forward facing surfaces of the tires at about the same height from the floor **(Figure 9-18, Page 9-15)**.

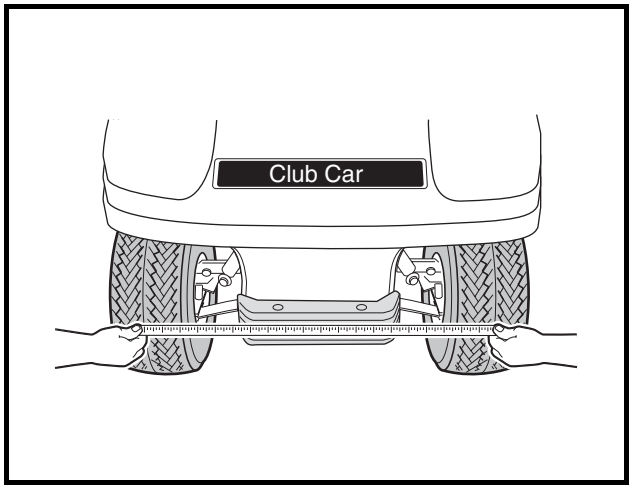

Figure 9-18 Check Toe-In

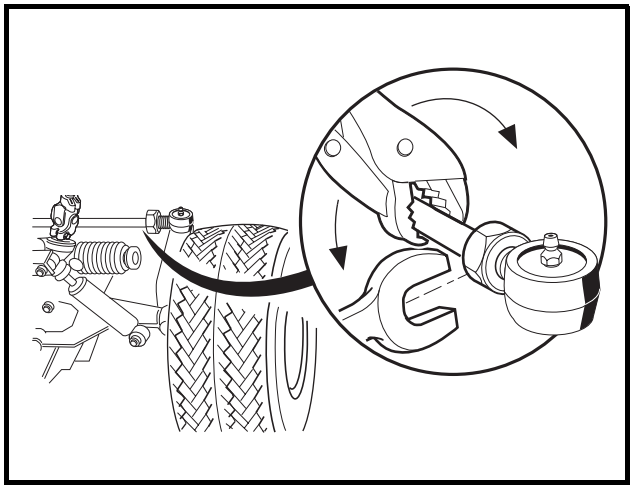

Figure 9-19 Adjust Toe-In

4. Measure the distance between the marks on the forward-facing surfaces of the tires. **See following NOTE.**

NOTE: *The front measurement must be less than the rear measurement.*

5. Subtract the measurement on the front of the tires from the measurement on the rear of the tires. The difference is the toe-in. Proper toe-in is 1/8 to 3/8 of an inch (3.2 to 9.5 mm).

6. If adjustment is necessary, loosen the jam nut on each tie rod ball joint and rotate the tie rod to increase or decrease toe-in **(Figure 9-19, Page 9-15)**. **See following CAUTION.**

Toe-in Adjustment, Continued:

CAUTION

- **The tie rod has right-hand threads on one end and left-hand threads on the other end. Right-hand threads are identified by a groove in the tie rod.**

7. Tighten nuts (loosened in step 6) to 21 ft-lb (28 N·m) and recheck toe-in.
8. After toe-in adjustment is made and with wheels in the straight ahead position, the steering wheel should be at the center of its travel. There should be equal travel to the left and right. **See following NOTE.**

NOTE: *If the minimum turning radius is not the same for both left and right turns, adjust the steering.* ***See Steering Adjustment on page 9-7.***

FRONT SUSPENSION COMPONENTS

See General Warning, Section 1, Page 1-1.

LEAF SPRING REMOVAL

1. Loosen lug nuts on both front wheels and raise front of vehicle with a chain hoist or floor jack. Place jack stands under the front cross tube of the vehicle frame and lower the vehicle onto the jack stands.
2. Remove both front wheels.
3. Remove the nuts (14) and bolts (25) from the bottom of each king pin (26) **(Figure 9-22, Page 9-19 or Figure 9-24, Page 9-21)**.
4. Remove the four bolts (30), four nuts (32), four lock washers (31), and bottom spring plate (29).
5. Remove tapered leaf spring (6).
6. Check the condition of the urethane bushings (27) and steel sleeves (28). Replace any that are worn or damaged.

LEAF SPRING INSTALLATION

1. Install urethane bushings (27) and steel sleeves (28) into leaf spring eyes **(Figure 9-22, Page 9-19 or Figure 9-24, Page 9-21)**.
2. Install tapered leaf spring (6), bottom spring plate (29), four bolts (30), four lock washers (31), and four nuts (32). Using a crisscross pattern sequence, tighten bolts to 23 ft-lb (31 N·m).
3. Install spring in king pins (26) with bolts (25) and nuts (14). Tighten to 17 ft-lb (23 N·m).
4. Install the wheels and finger-tighten the lug nuts.
5. Lower the vehicle and finish tightening lug nuts (using a crisscross pattern) to 55 ft-lb (74.6 N·m).
6. Adjust camber and toe-in. **See Camber Adjustment on page 9-14 and Toe-in Adjustment on page 9-15.**

KINGPIN AND STEERING SPINDLE REMOVAL

1. Remove the front hub. **See Front Wheel Bearings and Hubs - 4-Wheel Brake Vehicles on page 9-23.**

2. **Vehicles with four-wheel brakes:** Disconnect the front brake cables.

   2.1. Remove the cotter pins (1), brake cable clevis pins (2), and cable retaining clips (3). Remove the brake cables (4) from the spindle brackets **(Figure 9-20, Page 9-17)**.

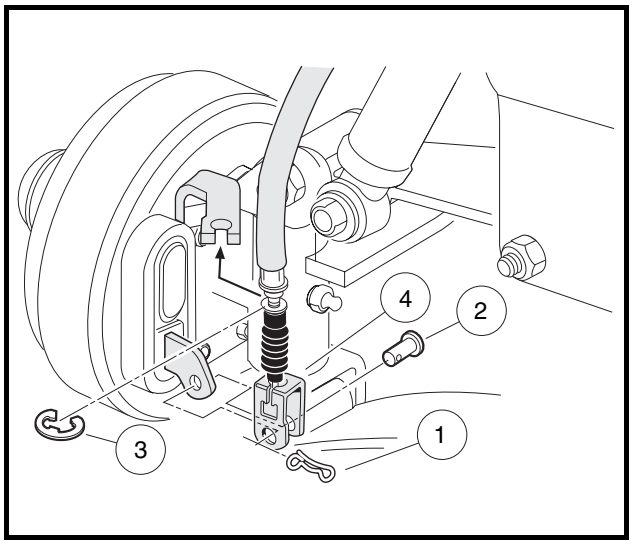

Figure 9-20 Connect Front Brake Cables

3. **Vehicles with two-wheel brakes**: Remove cotter pins (22) and nuts (20), then remove ball joints from the spindles **(Figure 9-21, Page 9-18 or Figure 9-23, Page 9-20).** Remove drag link ball joint. **See also Tie Rod and Drag Link Removal on page 9-13**.

4. Remove the nut (17) from the top of the kingpin (26) **(Figure 9-22, Page 9-19 or Figure 9-24, Page 9-21)**.

5. Raise the upper clevis (16) from the kingpin.

6. Remove the thrust washer (19).

7. Slide the spindle off the kingpin (26).

8. Remove the wave washer (20) and inspect it. If the washer is broken or has a wave bottom to wave crest height dimension of less than 0.040 inch (0.10 cm), it must be replaced.

9. Remove bolt (25) and nut (14) from bottom of kingpin (26) and remove kingpin.

10. Inspect the kingpin and spindle. If either is worn or damaged, it must be replaced.

11. Inspect the bushings (3 and 4). If the bushings are worn or damaged, remove them and press in new ones. **See following NOTE.**

NOTE: *If the bushings are replaced, ream new bushings to 0.750-0.752 (3/4 inch) (19.05-19.10 mm) in diameter. The reamer should be long enough to ream both bushings from one direction.*

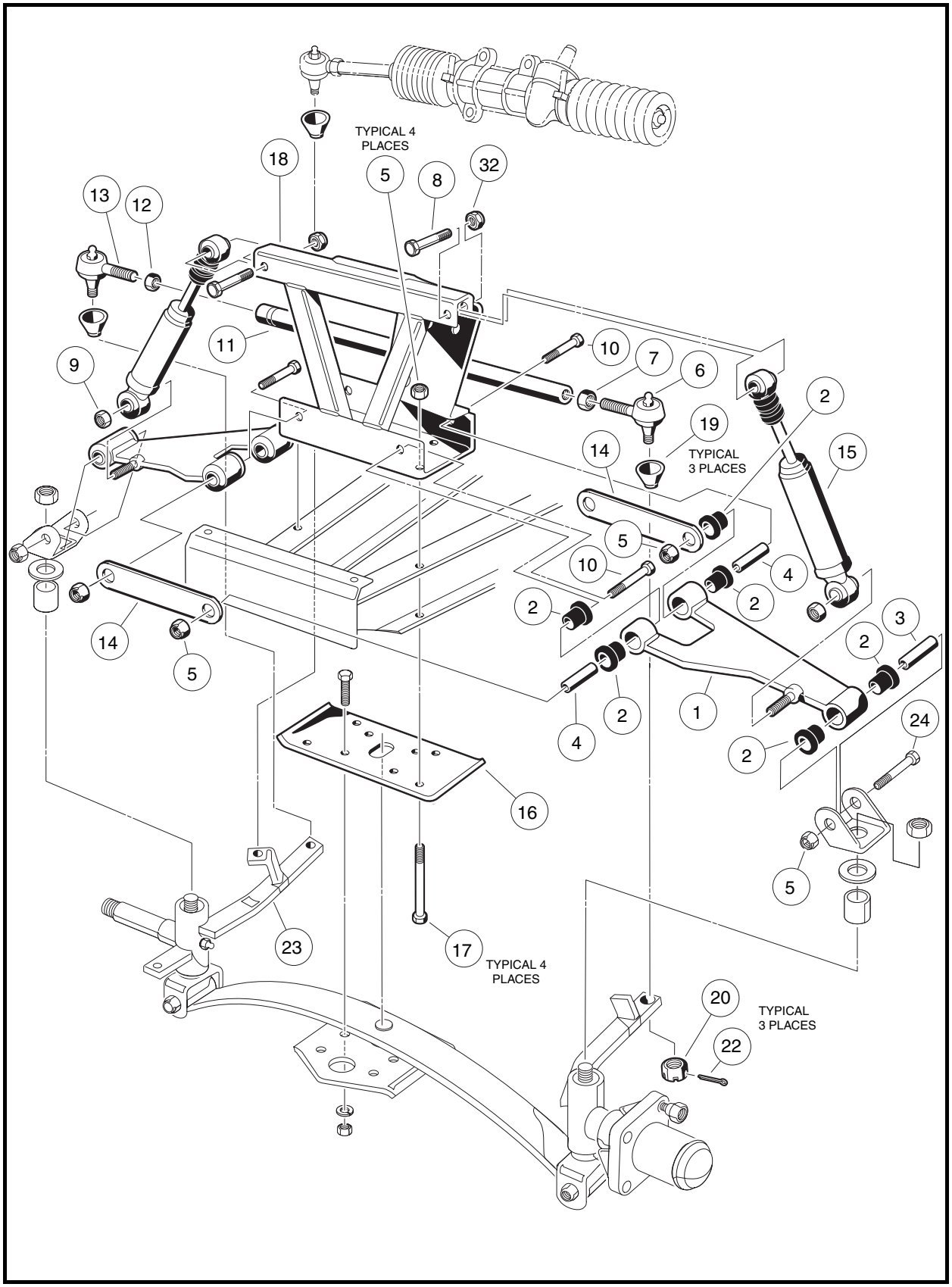

Figure 9-21 Two-Wheel Brake Vehicle – Upper Portion

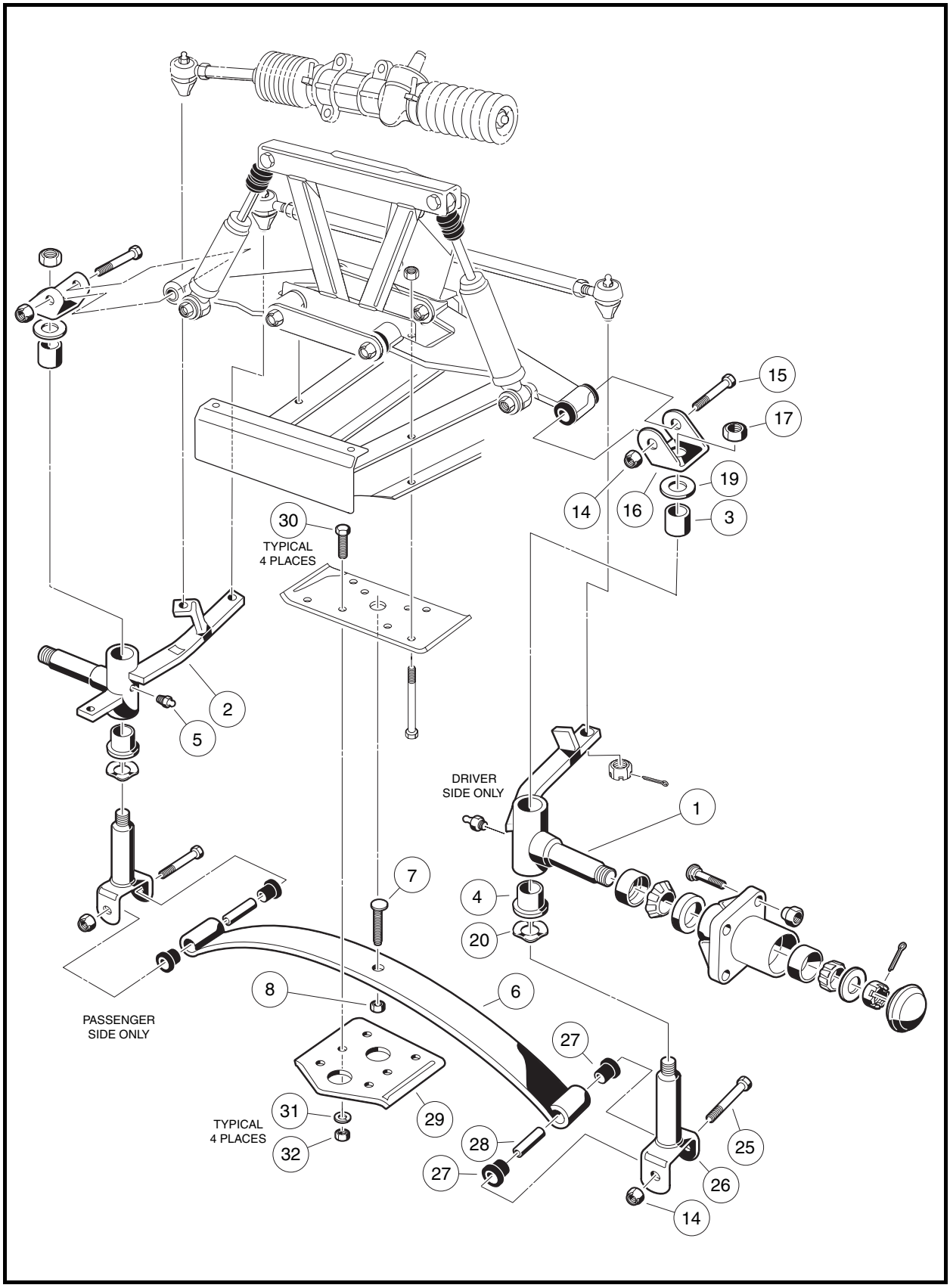

Figure 9-22 Two-Wheel Brake Vehicle – Lower Portion

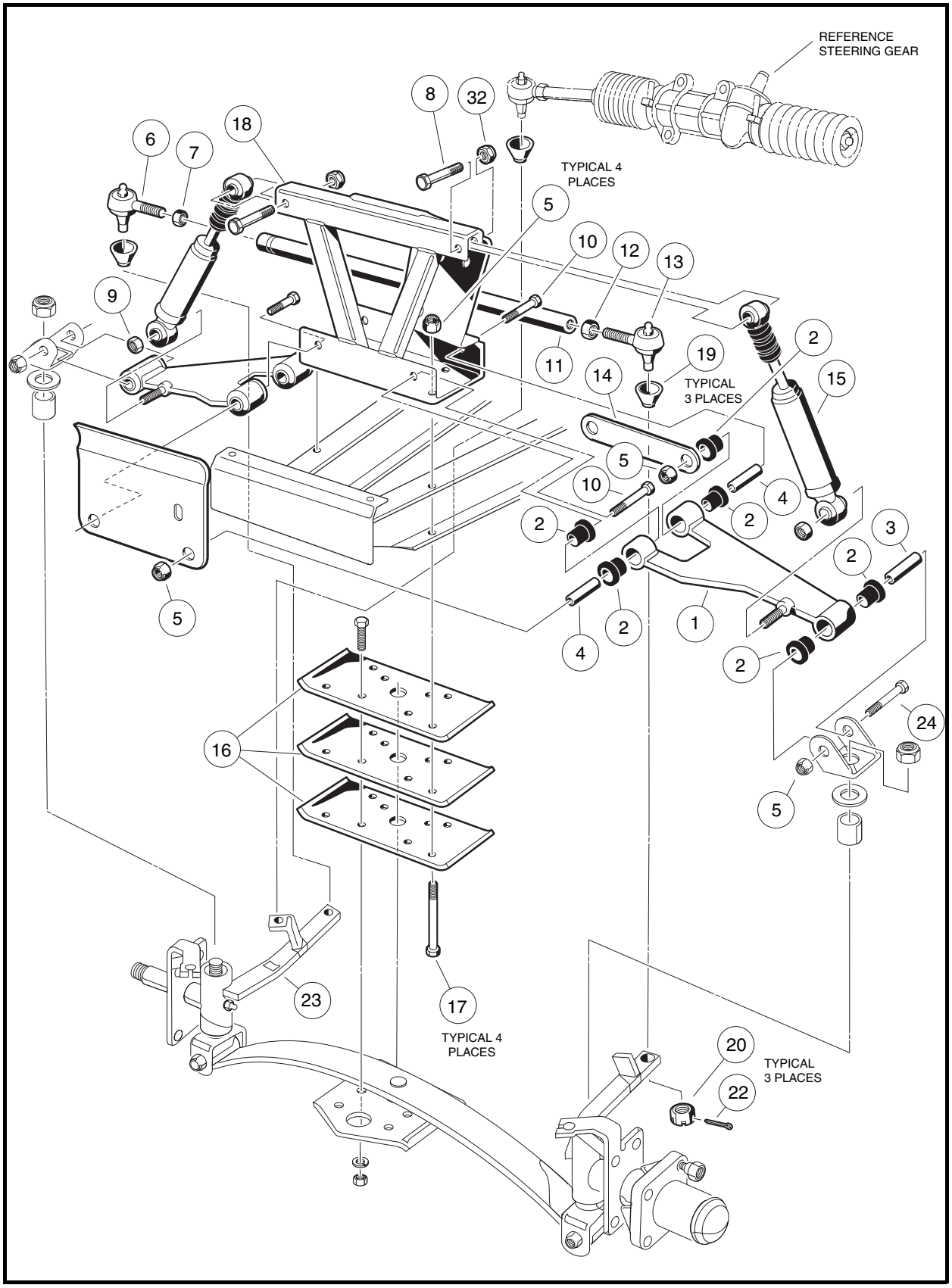

Figure 9-23 Four-Wheel Brake Vehicle – Upper Portion

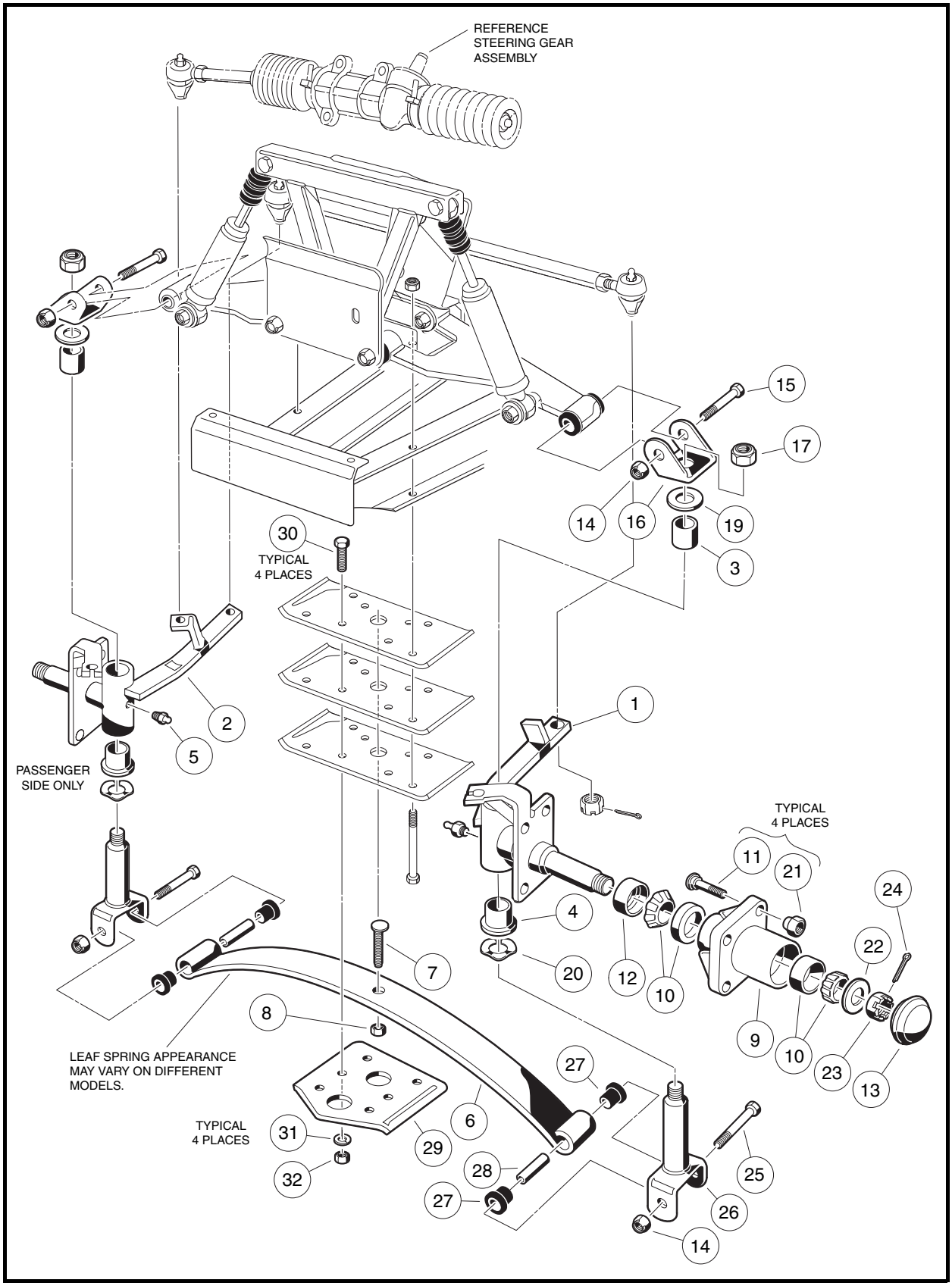

Figure 9-24 Four-Wheel Brake Vehicle – Lower Portion

KINGPIN AND STEERING SPINDLE INSTALLATION

1. Inspect all parts and replace them as necessary.
2. Install the kingpin (26) over the leaf spring eye. Insert the bolt (25) and install the nut (14) **(Figure 9-22, Page 9-19 or Figure 9-24, Page 9-21)**. Tighten the bolt to 17 ft-lb (23 N·m).
3. Install the wave washer (20).
4. Install the steering spindle on the kingpin. Then install the thrust washer (19), upper plate clevis (16), and nut (17). Tighten the nut to 40 ft-lb (54.2 N·m).
5. Attach the ball joints (6 and 13) to the spindle arm, install and tighten the nut (20), and install the cotter pin (22) **(Figure 9-21, Page 9-18 or Figure 9-23, Page 9-20)**.
6. Install the drag link ball joint. **See Tie Rod and Drag Link Installation on page 9-13.**
7. **Vehicles with four-wheel brakes:** Connect the front brake cables on four-wheel brake vehicle in reverse order of disassembly **(Figure 9-20, Page 9-17)**.
8. **Vehicles with two-wheel brakes:** Install front hub and wheel. **See Front Wheel Bearings and Hub Installation on page 9-24.**

DELTA A-PLATE REMOVAL

1. Loosen lug nuts on both front wheels and raise front of the vehicle with a chain hoist or floor jack. Place jack stands under the front cross tube of the vehicle frame and lower the vehicle onto the jack stands.
2. Remove wheel. Remove bolts (10 and 24), A-Plate straps (14), and nuts (5) **(Figure 9-21, Page 9-18 or Figure 9-23, Page 9-20)**.
3. Remove the lower shock absorber mounting nut (9), then slide the shock absorber free of the Delta A-Plate.
4. Remove the Delta A-Plate (1).
5. Inspect the bushings (2) and sleeves (3 and 4) in the Delta A-Plate and replace them if necessary.

DELTA A-PLATE INSTALLATION

1. Install the A-Plate in reverse order of removal. Tighten the A-Plate suspension bolts (10 and 24) to 20 ft-lb (27 N·m) **(Figure 9-21, Page 9-18 or Figure 9-23, Page 9-20)**.
2. Install the wheels and adjust the wheel alignment. **See Wheel Alignment on page 9-14.**

SHOCK ABSORBER REMOVAL

1. Inspect the shock absorbers for fluid leakage at the point where the shaft enters the shock absorber body. Leaking shock absorbers should be replaced.
2. Remove the nut (9) attaching the shock absorber to the A-Plate **(Figure 9-21, Page 9-18 or Figure 9-23, Page 9-20)**.
3. Remove the nut (32) and bolt (8) attaching the shock absorber to the shock and gear support.
4. Remove the shock absorber.

SHOCK ABSORBER INSTALLATION

NOTE: *When installing shock absorbers, make sure front shocks have identical part numbers and rear shocks have identical part numbers.*

1. Install the shock absorber by reversing the removal procedure.
2. Tighten the nuts to 20 ft-lb (27 N·m).

FRONT WHEEL BEARINGS AND HUBS - 4-WHEEL BRAKE VEHICLES

See General Warning, Section 1, Page 1-1.

FRONT WHEEL FREE PLAY INSPECTION

1. Raise the front of the vehicle.
2. Using your hands, attempt to rock the wheel and hub assembly back and forth on the spindle. If there is any observable movement of the wheel and hub on the spindle, remove dust cap (1) and cotter pin (2), and then tighten the spindle nut (3) until the bearing (5) fully seats in the bearing race (7).
3. Loosen spindle nut one cotter pin position. If the hub does not turn freely, loosen spindle nut one more cotter pin position.
4. Install a new cotter pin (2). If movement continues, replace the wheel bearings (5) as required **(Figure 9-25, Page 9-23)**.

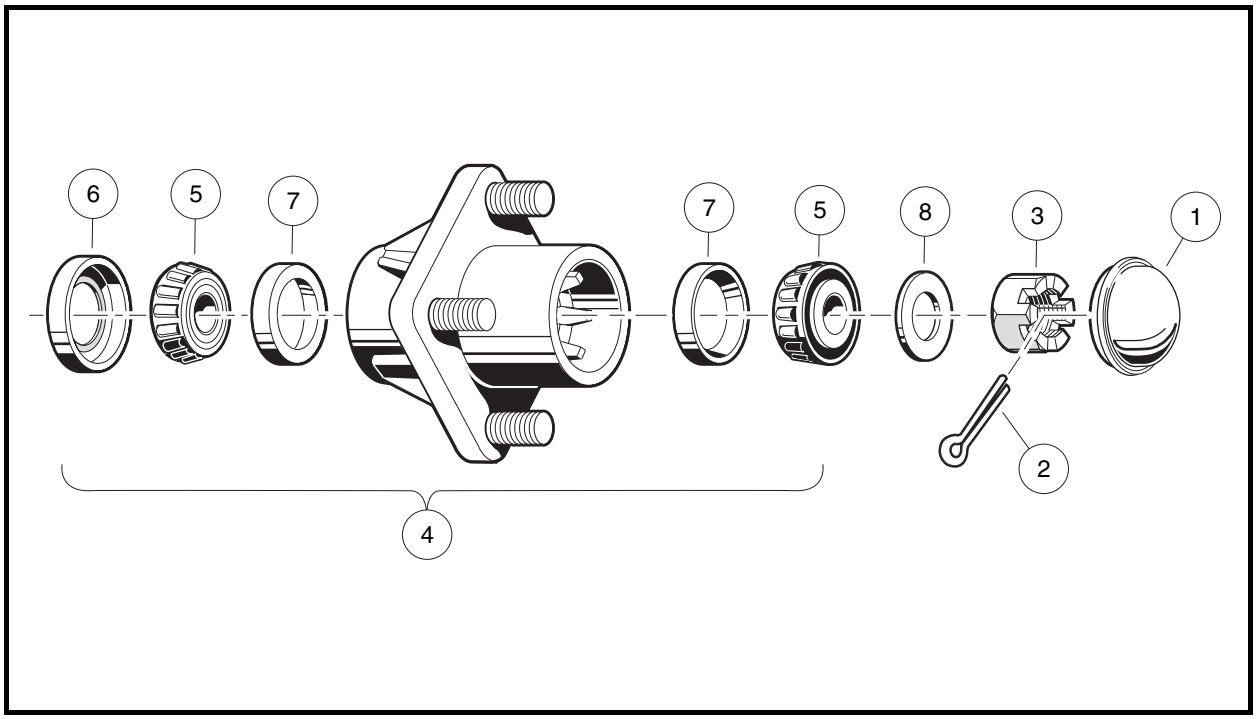

Figure 9-25 Front Wheel Bearings and Hub - Four-Wheel Brake Vehicles

FRONT WHEEL BEARINGS AND HUB REMOVAL

1. Remove the front wheels. **See Wheel Removal, Section 7, Page 7-1.**
2. Remove the front wheel hubs.
   2.1. Remove dust cover (1), cotter pin (2), spindle nut (3), and flat washer (8) **(Figure 9-25, Page 9-23)**.
   2.2. Remove the hub assembly (4) from the spindle shaft.
3. Remove the seal (6) and the bearings (5) from the hub.
4. Inspect the bearing cups (7). If they are worn or pitted, remove the cups by inserting a drift punch from the opposite end of the hub and tapping lightly around them.
5. Clean all parts and inspect them for wear. Replace any damaged or worn parts. **See following NOTE.**

NOTE: *Do not use compressed air to dry wheel bearings after cleaning.*

6. Inspect the surface of the spindle shaft where the seal (6) seats. It should be clean and smooth.

FRONT WHEEL BEARINGS AND HUB INSTALLATION

1. Pack the wheel bearings (5) and hub cavities, and lubricate cups (7) with wheel bearing grease or chassis lube. Make sure the grease is forced between the rollers **(Figure 9-25, Page 9-23)**.
2. If bearing cups (7) were removed, press new ones in squarely against stops in the hub. **See following NOTE.**

NOTE: *Install new cups when new bearings are installed.*

3. Install the wheel bearings (5) into the hub and install a new seal (6), with the metal edge toward the hub. **See following NOTE**.

NOTE: *Apply grease around dust seal inner lip before installation.*

4. Install the hub assembly (4) and flat washer (8) on the spindle and start the spindle nut (3).
5. Tighten the spindle nut until the hub is hard to turn, then back the nut (3) off until the hub turns freely. Install a new cotter pin (2). **See following NOTE.**

NOTE: *When the cotter pins are bent, make sure they do not contact the hub or dust cap.*

6. Check front wheel free play. **See Front Wheel Free Play Inspection on page 9-23.**
7. Install the dust cap (1).
8. Repeat the procedure for the opposite wheel.
9. Install the wheels and then finger-tighten the lug nuts.
10. Lower the vehicle and finish tightening lug nuts (using a crisscross pattern) to 55 ft-lb (74.6 N·m).

A

accelerator
- pedal (electric)
  - height adjustment 5-18
  - installation 5-11
  - removal 5-9
- pedal (gas)
  - height adjustment 5-14
  - installation 5-8
  - removal 5-6

access door
- installation 4-10
- removal 4-10

B

bed, flat
- *see* flat bed

bed, tilt
- *see* tilt bed

body, front
- installation 4-4
- removal 4-3
- repair 4-2

brake, park
- *see* park brake

brakes
- adjustment (manually-adjusted brakes) 6-12
- adjustment (self-adjusting brakes) 6-8
- assembly
  - cleaning (manually-adjusted brakes) 6-9
  - cleaning (self-adjusting brakes) 6-3
- cable
  - equalization (manually-adjusted brakes) 6-16
- cable (front)
  - installation 6-21
  - removal 6-20
- cable (rear)
  - installation 6-23
  - removal 6-22
- cluster (front)
  - adjustment 6-13
  - installation 6-19
  - removal 6-18
- cluster (rear)
  - adjustment 6-13
  - installation 6-18
  - removal 6-17
- pedal
  - height adjustment (electric) 5-16
  - height adjustment (gas) 5-11
  - installation 5-4
  - removal 5-1
- shoe
  - installation (manually-adjusted brakes) 6-10
  - installation (self-adjusting brakes) 6-5
  - removal 6-1

bumper
- installation 4-14
- removal 4-14

C

CAUTION
- definition of 1-1

cleaning
- brake assembly (manually-adjusted brakes) 6-9
- brake assembly (self-adjusting brakes) 6-3
- vehicle body 4-1

column, steering
- *see* steering column

D

DANGER
- definition of 1-1

door, access
- *see* access door

door, side
- *see* side door

F

fender, rear
- installation 4-12
- removal 4-10

flat bed
- installation 4-7
- removal 4-7

flat bed trim
- installation 4-8
- removal 4-7

floor mat, front
- installation 4-14
- removal 4-13

floor mat, rear
- installation 4-14
- removal 4-14

H

hitch, trailer
- *see* trailer hitch

L

lubrication
- front suspension 9-14

M

multi-leaf spring
installation 8-3
removal 8-2

P

park brake
adjustment (electric) 5-17
adjustment (gas) 5-12
installation 5-5
removal 5-5
pedal group adjustment
electric 5-16
gasoline 5-11

R

rack and pinion
assembly 9-10
disassembly 9-8
installation 9-12
removal 9-8

S

safety 1-1
serial number, vehicle 3-1
shock absorber, front
installation 9-23
removal 9-22
shock absorber, rear
inspection 8-1
installation 8-2
removal 8-1
side door
installation 4-10
removal 4-10
snubber
installation 8-6
removal 8-6
specifications, vehicle 2-1
spring, multi-leaf
see multi-leaf spring
steering
adjustment 9-7
rack and pinion
assembly 9-10
disassembly 9-8
installation 9-12
removal 9-8
steering column
assembly 9-5
disassembly 9-4
installation 9-5
removal 9-2
steering wheel
installation 9-2
removal 9-1
storage
electric vehicle 3-4
gasoline vehicle 3-2
suspension, front
camber adjustment 9-14
components 9-16
delta a-plate
installation 9-22
removal 9-22
kingpin and steering spindle
installation 9-22
removal 9-17
leaf spring
installation 9-16
removal 9-16
shock absorber
installation 9-23
removal 9-22
wheel bearings and hubs
installation 9-24
removal 9-24
front wheel free play inspection 9-23
lubrication 9-14
toe-in adjustment 9-15
wheel alignment 9-14
suspension, rear
jounce bumper
installation 8-8
removal 8-8
multi-leaf spring
installation 8-3
removal 8-2
shock absorber
inspection 8-1
installation 8-2
removal 8-1
snubber
installation 8-6
removal 8-6
stabilizer bar
installation 8-8
removal 8-7

T

tailskirt
installation 4-13
removal 4-13
tie rod and drag link
installation 9-13

removal 9-13
tilt bed
installation 4-5
removal 4-5
tire
installation 7-3
pressure 7-1
removal 7-2
repair 7-3
trailer hitch
installation 4-13
removal 4-13

W

WARNING
definition of 1-1
wheel
see also tire
installation 7-1
removal 7-1

Your Comments Are Appreciated

Please select your category:

- ☐ Distributor/Dealer
- ☐ Individual Owner
- ☐ Other: _____
- ☐ Technician
- ☐ Golf Course Superintendent

In order to help us better serve you, please rate this publication in the following categories:

	Poor	Fair	Average	Good	Excellent
1. Ease of Understanding	☐	☐	☐	☐	☐
2. Ease of Finding Information	☐	☐	☐	☐	☐
3. Clarity of Illustrations	☐	☐	☐	☐	☐
4. Index Usability	☐	☐	☐	☐	☐
5. Troubleshooting Chart Usability	☐	☐	☐	☐	☐

Comments/Suggestions:

_____
_____
_____
_____
_____
_____
_____
_____
_____
_____
_____
_____
_____

Please fax a copy of this page to (706) 228-2662.

Thank You!
Club Car Technical Publications Department

Club Car, Inc.
P.O. Box 204658
Augusta, GA 30917-4658
USA

Web www.clubcar.com
Phone 1.706.863.3000
1.800.ClubCar
Int'l +1 706.863.3000
Fax 1.706.863.5808

Ingersoll Rand
Industrial Technologies