2009-2011 Gasoline Precedent Maintenance and Service Manual

Gasoline Vehicles

Manual Number 103472702
Edition Code 0409B1010A

FOREWORD

Club Car vehicles are designed and built to provide the ultimate in performance efficiency; however, proper maintenance and repair are essential for achieving maximum service life and continued safe and reliable operation.

This manual provides detailed information for the maintenance and repair of the electric Precedent vehicles, and should be thoroughly reviewed prior to servicing the vehicle. The procedures provided herein must be properly implemented, and the DANGER, WARNING, and CAUTION statements must be heeded.

This manual was written for the trained technician who already possesses knowledge and skills in electrical and mechanical repair. If the technician does not have such knowledge and skills, attempted service or repairs to the vehicle may render the vehicle unsafe. For this reason, Club Car advises that all repairs and/or service be performed by an authorized Club Car distributor/dealer representative or by a Club Car factory-trained technician.

It is the policy of Club Car, LLC to assist its distributors and dealers in continually updating their service knowledge and facilities so they can provide prompt and efficient service for vehicle owners. Regional technical representatives, periodic service bulletins, maintenance and service manuals, and other service publications also represent Club Car's continuing commitment to customer support.

Club Car offers a full line of training and continuing education classes for technicians who want to learn more about our products. For more information, contact your local dealer or Club Car's Technical Services department for a list of upcoming classes.

This manual covers all aspects of typical vehicle service; however, unique situations sometimes occur when servicing a vehicle. If it appears that a service question is not answered in this manual, please contact your nearest authorized Club Car dealer or distributor for assistance. You may also write to us at: Club Car, LLC, P.O. Box 204658; Augusta, GA 30917–4658 USA, Attention: Technical Services.

⚠ WARNING

- **Read See Section 1 – Safety. before attempting any service on the vehicle.**
- **Before servicing vehicle, read complete section(s) and any referenced information that may be relevant to the service or repair to be performed.**

NOTE: *This manual represents the most current information at the time of publication. Club Car, LLC is continually working to further improve its vehicles and other products. These improvements may affect servicing procedures. Any modification and/or significant change in specifications or procedures will be forwarded to all Club Car dealers and will, when applicable, appear in future editions of this manual.*

Club Car, LLC reserves the right to change specifications and designs at any time without notice and without the obligation of making changes to units previously sold.

There are no warranties expressed or implied in this manual. See the limited warranty found in the vehicle owner's manual or write to Club Car, LLC, P.O. BOX 204658, Augusta, Georgia 30917-4658 USA, Attention: Warranty Department.

Copyright © 2009, 2010 Club Car, LLC
Club Car, Carryall, and ArmorFlex
are registered trademarks of Club Car, LLC
This manual effective August 4, 2008

CONTENTS

SECTION 1 – SAFETY 1-1

General Warnings 1-1
Disabling the Vehicle 1-3
Disconnecting the Battery – Gasoline Vehicles 1-3
Connecting the Battery – Gasoline Vehicles 1-3
Recycling Lead-Acid Batteries 1-4
International safety symbols on batteries 1-4

SECTION 2 – VEHICLE SPECIFICATIONS 2-1

SECTION 3 – GENERAL INFORMATION 3-1

Serial Number Identification 3-1
Safety Committee 3-2
Storage – Gasoline Vehicle 3-2
Preparing the Gasoline Vehicle for Extended Storage 3-3
Returning the Stored Gasoline Vehicle to Service 3-4

SECTION 4 – BODY AND TRIM 4-1

Cleaning the Vehicle 4-1
Seat 4-1
Front and Rear Body Repair 4-2
Stress Lines or Streaks 4-2
Minor Impact Damage/Deformations 4-2
Minor Scratches and Surface Blemishes 4-3
Gouges, Punctures, Tears, Large Scratches, and Abrasions 4-3
Front Body 4-3
Front Body Removal 4-3
Front Body Installation 4-3
Front Bumper 4-5
Instrument Panel 4-6
Instrument Panel Removal 4-6
Instrument Panel Installation 4-6
Floor Mat and Retainers 4-7
Floor Mat Retainer Removal 4-7
Floor Mat Retainer Installation 4-7
Kick Plate and Choke Button Bezel 4-8
Kick Plate and Choke Button Removal 4-8
Kick Plate and Choke Button Installation 4-8
Rear Body – Two-Passenger Vehicles 4-9
Universal Accessory Mounting 4-9
Backrest and Structural Accessory Module (SAM) 4-10
Rear Body Components (Two-Passenger) 4-12
Rear Body – Four-Passenger Vehicles 4-14
Seat Backs 4-14
Seat Support 4-14
Foot Deck 4-15
Rear Body Components (Four-Passenger) 4-16
Canopy – Two-Passenger 4-17
Two-Passenger Canopy Removal 4-17
Two-Passenger Canopy Installation 4-19
Canopy – Four-Passenger 4-19
Four-Passenger Canopy Removal 4-19
Four-Passenger Canopy Installation 4-20
Canopy (Monsoon Version) – Four-Passenger 4-22
Monsoon Canopy Removal 4-22
Monsoon Canopy Installation 4-22

SECTION 5 – ACCELERATOR AND BRAKE PEDAL GROUP 5-1

Pedal Group – Gen. I 5-1
Pedal Group Removal 5-1
GCOR 5-3
Debris Shields 5-3
Brake Return Spring 5-3
Pawl Assembly 5-3
Accelerator Return Spring 5-4
Pedal Group Installation 5-6
Pedal Group – Gen. II 5-7
Pedal Group Removal 5-7
Throttle Position Sensor 5-9
Debris Shields 5-9
Accelerator Pedal Removal 5-9
Accelerator Pedal Installation 5-9
Brake Pedal Removal 5-11
Brake Pedal Installation 5-11
Pedal Group Installation 5-11

SECTION 6 – WHEEL BRAKE ASSEMBLIES 6-1

General Information 6-1
Brake Shoe Removal 6-1
Brake Assembly Cleaning 6-5
Brake Shoe Installation 6-7
Brake Cable Equalizer Adjustment 6-10
Brake Cluster Removal and Installation 6-11
Brake Cluster Removal 6-11
Brake Cluster Installation 6-11
Brake Cable Removal and Installation 6-13
Brake Cable Removal 6-13
Brake Cable Installation 6-14

SECTION 7 – STEERING AND FRONT SUSPENSION 7-1

General Information 7-1
Steering Wheel 7-1
Steering Wheel Removal 7-1
Steering Wheel Installation 7-2
Steering Column 7-2
Steering Column Removal 7-2
Steering Column Installation 7-4
Rack and Pinion 7-4
Rack and Pinion Inspection 7-4
Rack and Pinion Removal 7-5
Rack and Pinion Disassembly 7-6
Rack and Pinion Assembly 7-8
Rack and Pinion Installation 7-9
Front Suspension 7-11
Lubrication 7-11
Wheel Alignment 7-11
Front Suspension Components 7-13
Tie Rod End Removal 7-13
Tie Rod Installation 7-13
Leaf Spring Removal 7-14
Leaf Spring Installation 7-14
Kingpin and Steering Spindle Removal 7-14
Kingpin and Steering Spindle Installation 7-14
Control Arm Removal 7-15
Control Arm Installation 7-15
Shock Absorber Removal 7-15
Shock Absorber Installation 7-15
Front Wheel Bearings and Hubs 7-18

Front Wheel Free Play Inspection 7-18
Front Hub Removal 7-18
Hub Installation 7-18

SECTION 8 – WHEELS AND TIRES 8-1

General Information 8-1
Wheels 8-1
Wheel Removal 8-1
Wheel Installation 8-1
Tires 8-2
Tire Removal 8-2
Tire Repair 8-2
Tire Installation 8-3

SECTION 9 – REAR SUSPENSION 9-1

General Information 9-1
Shock Absorbers 9-1
Shock Absorber Removal and Inspection 9-1
Shock Absorber Installation 9-1
Leaf Springs (Two-Passenger Vehicles) 9-2
Leaf Spring Removal (Two-Passenger Vehicles) 9-2
Leaf Spring Installation (Two-Passenger Vehicles) 9-3
Leaf Springs (Four-Passenger Vehicles) 9-4
Leaf Spring Removal (Four-Passenger Vehicles) 9-4
Leaf Spring Installation (Four-Passenger Vehicles) 9-5

SECTION 10 – PERIODIC MAINTENANCE 10-1

General Information 10-1
Periodic Service Schedules 10-1
Periodic Lubrication Schedules 10-3
Engine Oil 10-4
Engine Oil Level Check 10-4
Engine Oil And Filter Change 10-4
Battery – Gasoline Vehicles 10-6

SECTION 11 – TROUBLESHOOTING AND ELECTRICAL SYSTEM – GCOR 11-1

General Information 11-1
Troubleshooting Guide 11-1
Wiring Diagrams – GCOR 11-6
Electrical System 11-11
Test Procedures 11-11

SECTION 12 – TROUBLESHOOTING AND ELECTRICAL SYSTEM – TPS 12-1

General Information 12-1
Troubleshooting Guide 12-1
Wiring Diagrams – Throttle Position Sensor 12-6
Electrical System 12-11
Test Procedures 12-11

SECTION 13 – ELECTRICAL COMPONENTS 13-1

Starter/Generator (Model G425419) 13-1
Testing the Starter/Generator 13-1
Starter/Generator Removal 13-1
Disassembly of the Starter/Generator to Service the Brushes 13-2
Brush Inspection and Replacement 13-2
Brush Spring Inspection and Replacement 13-3
Starter/Generator Assembly 13-4
Disassembly of the Starter/Generator to Service the Armature/Commutator 13-4

Bearing Cleaning and Inspection 13-5
Bearing Removal 13-6
Field Coil Removal 13-6
Visual Inspection of Armature 13-7
Commutator Cleaning and Inspection 13-8
Armature Ground Test 13-8
Visual Inspection of Field Coils 13-9
Starter/Generator Rework 13-9
Starter/Generator Assembly 13-10
Starter/Generator Installation 13-11
Belt Tension Adjustment 13-11
Starter/Generator (Model 114-01-4005B) 13-13
Testing the Starter/Generator 13-13
Starter/Generator Removal 13-13
Disassembly of the Starter/Generator to Service the Brushes 13-14
Brush Inspection and Replacement 13-15
Brush Spring Inspection and Replacement 13-15
Starter/Generator Assembly 13-16
Disassembly of the Starter/Generator to Service the Armature/Commutator 13-17
Bearing Cleaning and Inspection 13-17
Bearing Removal 13-18
Field Coil Assembly 13-18
Visual Inspection of Armature 13-19
Commutator Cleaning and Inspection 13-20
Armature Ground Test 13-20
Visual Inspection of Field Coils 13-21
Starter/Generator Rework 13-21
Starter/Generator Assembly 13-21
Starter/Generator Installation 13-22
Belt Tension Adjustment 13-23
Voltage Regulator 13-25
Testing the Voltage Regulator 13-25
Voltage Regulator Removal 13-25
Voltage Regulator Installation 13-25
Key Switch 13-26
Testing the Key Switch 13-26
Key Switch Removal 13-26
Key Switch Installation 13-27
Solenoid 13-27
Testing the Solenoid 13-27
Solenoid Removal 13-27
Solenoid Installation 13-27
Fuse 13-28
Testing the Fuse 13-28
Fuse Removal 13-28
Fuse Installation 13-28
Limit Switches 13-28
Accelerator Pedal Limit Switch 13-28
Kill Limit Switch 13-29
Neutral Lockout Limit Switch 13-29
Neutral Lockout Cam 13-30
Testing the Neutral Lockout Cam 13-30
Neutral Lockout Cam Removal 13-30
Neutral Lockout Cam Installation 13-30
Reverse Warning Buzzer 13-30
Testing the Reverse Warning Buzzer 13-31
Reverse Warning Buzzer Removal 13-31
Reverse Warning Buzzer Installation 13-31
Reverse Buzzer Limit Switch 13-32
Testing the Reverse Buzzer Limit Switch 13-32
Reverse Buzzer Limit Switch Removal 13-32
Reverse Buzzer Limit Switch Installation 13-32
Low Oil Warning Light 13-32
Testing the Low Oil Warning Light 13-33

Low Oil Warning Light Removal 13-33
Low Oil Warning Light Installation 13-33
Fuel Gauge 13-33
Testing the Fuel Gauge 13-34
Fuel Gauge Removal 13-34
Fuel Gauge Installation 13-34
Fuel Level Sending Unit 13-35
Testing the Fuel Level Sending Unit 13-35
Hour Meter 13-35
Testing the Hour Meter 13-35
Hour Meter Removal 13-35
Hour Meter Installation 13-35
RPM Limiter 13-36
Testing the RPM Limiter 13-36
RPM Limiter Removal 13-36
RPM Limiter Installation 13-36
Ignition Coil 13-37
Testing Ignition Coil 13-37
Ignition Coil Removal 13-37
Ignition Coil Installation 13-39
Oil Level Sensor 13-40
Testing the Oil Level Sensor 13-40
Oil Level Sensor Removal 13-40
Oil Level Sensor Installation 13-40
Battery 13-40
General Information 13-41
Preventive Maintenance 13-41
Self-Discharge 13-42
Water Level 13-42
Vibration Damage 13-42
Mineral Content 13-42
Battery Removal 13-43
Charging the Battery 13-43
Battery Installation 13-44
Battery Storage 13-44
Charging a Dead Battery 13-44
Ground Cables 13-44
Testing the Ground Cables 13-45

SECTION 14 – AS11 FE 350 ENGINE 14-1

General Information 14-1
Before Servicing 14-1
Engine Rotation 14-1
Spark Plug 14-2
Cylinder Head 14-3
General Information 14-3
Breather Valve (Reed Valve) 14-3
Crankcase 14-3
Engine Removal 14-3
Crankcase Cover Removal 14-4
Oil Level Sensor 14-5
Crankcase Cover Installation 14-6
Ignition Coil and Flywheel 14-7
Ignition Coil and Flywheel Removal 14-7
Flywheel Installation 14-8
Ignition Coil Inspection and Repair 14-9
Ignition Coil Installation 14-9
Crankcase Cover Installation 14-9
Engine Installation 14-9
Torque Specifications 14-11
Adjustments and Settings 14-11

SECTION 15 – AS26 FE 350 ENGINE 15-1

General Information 15-1
Before Servicing 15-1
Engine Rotation 15-1
Spark Plug 15-2
Cylinder Head 15-3
General Information 15-3
Breather Valve (Reed Valve) 15-3
Valve Clearance Check and Adjustment 15-3
Crankcase 15-4
Engine Removal 15-4
Crankcase Cover Removal 15-5
Oil Level Sensor 15-6
Crankcase Cover Installation 15-7
Ignition Coil and Flywheel 15-8
Ignition Coil and Flywheel Removal 15-8
Flywheel Installation 15-9
Ignition Coil Installation 15-10
Crankcase Cover Installation 15-10
Engine Installation 15-10
Torque Specifications 15-12
Adjustments and Settings 15-12

SECTION 16 – FUEL SYSTEM 16-1

General Information 16-1
Carburetor 16-1
Main Jet Elevation/Size Chart 16-3
Changing the Main Jet 16-3
Engine Control Linkage 16-6
General Information 16-6
Governor Cable 16-6
Accelerator Cable 16-7
Closed Throttle or Idle Adjustment 16-8
Engine RPM Adjustment 16-8
Choke and Air Intake System 16-9
General Information 16-9
Choke Button 16-10
Air Intake Components Removal 16-11
Air Intake Components Installation 16-11
Air Filter 16-11
Fuel Filter 16-14
General Information 16-14
Fuel Filter Removal 16-14
Fuel Filter Installation 16-14
Fuel Pump 16-15
General Information 16-15
Fuel Pump Removal 16-15
Fuel Pump Disassembly (Metal Pump Only) 16-15
Fuel Pump Cleaning and Inspection (Metal Pump Only) 16-16
Fuel Pump Assembly (Metal Pump Only) 16-16
Fuel Pump Installation 16-17
Fuel Tank 16-17
General Information 16-17
Fuel Tank Removal 16-18
Fuel Tank Disposal 16-19
Fuel Tank Storage 16-19
Fuel Tank Installation 16-19
Fuel Lines 16-20
Fuel Shut-Off Valve 16-21
Fully Open Position 16-21
Carbon Canister (If Equipped) 16-21
Carbon Canister Removal 16-22

Carbon Canister Installation 16-22

SECTION 17 – EXHAUST SYSTEM 17-1

Muffler 17-1
Muffler Removal 17-1
Muffler Installation 17-1

SECTION 18 – UNITIZED TRANSAXLE 18-1

General Information 18-1
Shifter Lever 18-1
Neutral Lockout 18-1
Governor System 18-2
Unitized Transaxle Service 18-2
Tools Required For This Section 18-3
Lubrication 18-3
Axle Shaft 18-4
Axle Shaft and Oil Seal Removal 18-4
Axle Bearing 18-5
Axle Shaft Installation 18-7
Unitized Transaxle Removal 18-8
Unitized Transaxle Installation 18-16
Forward/Reverse Shifter Cable 18-21
Forward/Reverse Shifter Cable Removal 18-21
Forward/Reverse Shifter Cable Installation 18-21
Forward/Reverse Shifter Cable Adjustment 18-23

SECTION 19 – TORQUE CONVERTER: GASOLINE VEHICLE 19-1

General Information 19-1
Troubleshooting 19-2
Drive Belt 19-3
Drive Belt Removal 19-3
Drive Belt Installation 19-3
Drive Clutch 19-4
Drive Clutch Removal 19-4
Drive Clutch Cleaning and Inspection 19-6
Drive Clutch Disassembly 19-8
Inspection of Drive Clutch Parts 19-10
Drive Clutch Assembly 19-11
Drive Clutch Installation 19-12
Driven Clutch 19-13
Driven Clutch Removal 19-13
Driven Clutch Disassembly 19-14
Driven Clutch Inspection 19-14
Driven Clutch Assembly 19-15
Driven Clutch Installation 19-17

SECTION i – INDEX

To ensure the safety of those servicing Club Car vehicles, and to protect the vehicles from possible damage resulting from improper service or maintenance, the procedures in this manual must be followed.

It is important to note that throughout this manual there are statements labeled DANGER, WARNING, or CAUTION. These special statements relate to specific safety issues, and must be read, understood, and heeded before proceeding with procedures. There are statements labeled NOTE, which provide other essential service or maintenance information.

⚠ DANGER

- **A DANGER indicates an immediate hazard that will result in severe personal injury or death.**

⚠ WARNING

- **A WARNING indicates an immediate hazard that could result in severe personal injury or death.**

⚠ CAUTION

- **A CAUTION with the safety alert symbol indicates a hazard or unsafe practice that could result in minor personal injury.**

CAUTION

- **A CAUTION without the safety alert symbol indicates a potentially hazardous situation that could result in property damage.**

GENERAL WARNINGS

The following safety statements must be heeded whenever the vehicle is being operated, repaired, or serviced. Other specific safety statements appear throughout this manual and on the vehicle.

⚠ DANGER

- **Battery – Explosive gases! Do not smoke. Keep sparks and flames away from the vehicle and service area. Ventilate when charging or operating vehicle in an enclosed area. Wear a full face shield and rubber gloves when working on or near batteries.**
- **Battery – Poison! Contains acid! Causes severe burns. Avoid contact with skin, eyes, or clothing. Antidotes:**
  - **External: Flush with water. Call a physician immediately.**
  - **Internal: Drink large quantities of milk or water. Follow with milk of magnesia or vegetable oil. Call a physician immediately.**
  - **Eyes: Flush with water for 15 minutes. Call a physician immediately.**

⚠ WARNING

- **Gasoline – Flammable! Explosive! Do not smoke. Keep sparks and flames away from the vehicle and service area. Service only in a well-ventilated area.**
- **Do not operate gasoline vehicle in an enclosed area without proper ventilation. The engine produces carbon monoxide, which is an odorless, deadly poison.**
- **Only trained technicians should service or repair the vehicle. Anyone doing even simple repairs or service should have knowledge and experience in electrical and mechanical repair. The appropriate instructions must be used when performing maintenance, service, or accessory installation.**
- **Follow the procedures exactly as stated in this manual, and heed all DANGER, WARNING, and CAUTION statements in this manual as well as those on the vehicle.**
- **Prior to leaving the vehicle unattended or servicing the vehicle, turn the key switch OFF, remove the key, and place the Forward/Reverse handle in the NEUTRAL position. Chock the wheels when servicing the vehicle.**
- **Wear safety glasses or approved eye protection when servicing the vehicle or battery charger. Wear a full face shield and rubber gloves when working on or near batteries.**
- **Do not wear loose clothing or jewelry such as rings, watches, chains, etc., when servicing the vehicle.**
- **Use insulated tools when working near batteries or electrical connections. Use extreme caution to avoid shorting of components or wiring.**
- **Frame ground – Do not allow tools or other metal objects to contact frame when disconnecting battery cables or other electrical wiring. Do not allow a positive wire to touch the vehicle frame, engine, or any other metal component.**
- **Moving parts! Do not attempt to service the vehicle while it is running.**
- **Hot! Do not attempt to service hot engine or exhaust system. Failure to heed this warning could result in severe burns.**
- **Lift only one end of the vehicle at a time. Use a suitable lifting device (chain hoist or hydraulic floor jack) with 1000 lb. (454 kg) minimum lifting capacity. Do not use lifting device to hold vehicle in raised position. Use approved jack stands of proper weight capacity to support the vehicle and chock the wheels that remain on the floor. When not performing a test or service procedure that requires movement of the wheels, lock the brakes.**
- **Improper use of the vehicle or failure to properly maintain it could result in decreased vehicle performance, severe personal injury, or death.**
- **Any modification or change to the vehicle that affects the stability or handling of the vehicle, or increases maximum vehicle speed beyond factory specifications, could result in severe personal injury or death.**
- **Check the vehicle for proper location of all vehicle safety and operation decals and make sure they are in place and are easy to read.**
- **Do not leave children unattended on vehicle.**
- **To avoid unintentionally starting a gasoline vehicle, disconnect the battery and spark plug wire. See Disconnecting the Battery – Gasoline Vehicles on page 1-3.**

DISABLING THE VEHICLE

1. Set the park brake.
2. Turn the key switch OFF and remove the key.
3. Place the Forward/Reverse control in the NEUTRAL position.
4. In addition, chock the wheels if servicing or repairing the vehicle.

DISCONNECTING THE BATTERY – GASOLINE VEHICLES

1. Disable the vehicle. **See Disabling the Vehicle on page 1-3.**
2. Disconnect the battery cables, negative (–) cable first, as shown **(Figure 1-1)**.
3. Disconnect the spark plug wire(s) from the spark plug(s).

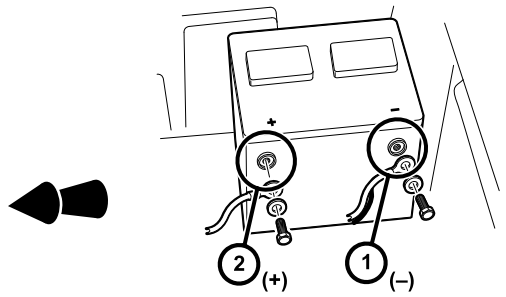

(Viewed from driver side of vehicle)
1. Remove negative battery cable.
2. Remove positive battery cable.

Connect battery cables in reverse order.

50

Figure 1-1 Battery Cable Removal – Gasoline

CONNECTING THE BATTERY – GASOLINE VEHICLES

1. Connect the battery cables, positive (+) cable first.
2. Tighten battery terminals to 80 in-lb (9 N·m).
3. Coat terminals with Battery Terminal Protector Spray (P/N 1014305) to minimize corrosion.
4. Connect the spark plug wire(s) to the spark plug(s).

RECYCLING LEAD-ACID BATTERIES

⚠ WARNING

- **Lead-acid batteries contain lead (Pb), other metals, acids and other compounds. If improperly handled, they can contaminate both water and soil, causing environmental damage and personal injury.**

Lead-acid batteries are identified by the symbol shown below and should be properly recycled **(Figure 1-2)**. They cannot be disposed as municipal waste and must be collected separately. Responsibility for environmental protection must be shared, not only by the manufacturers of the batteries, but by people who use the batteries as well. Please contact your nearest Club Car dealer or distributor for information on how to properly recycle your batteries.

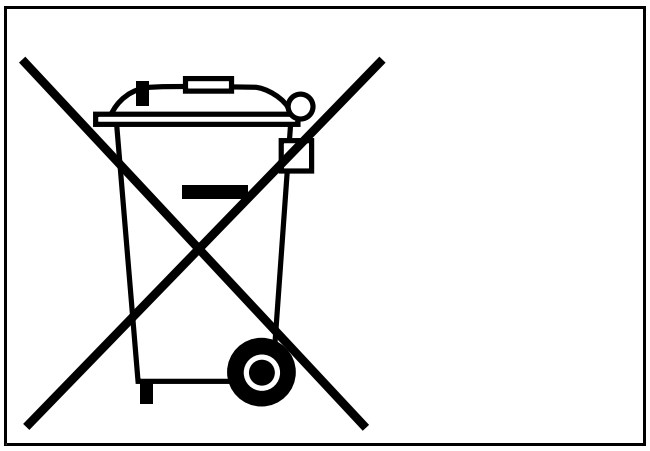

1403
Figure 1-2 Dispose of Lead-acid Batteries Properly

INTERNATIONAL SAFETY SYMBOLS ON BATTERIES

Anyone using, repairing, or servicing the vehicle must understand and heed the safety symbols on the vehicle battery or batteries.

1. Shield eyes.
2. Read and follow operating instructions.
3. No smoking, no open flames, no sparks.
4. Keep away from children.
5. Battery acid hazard.
6. Explosive gas hazard.

Refer to General Warnings for more information.

1642
Figure 1-3 International Safety Symbols on Batteries

SPECIFICATIONS	TWO-PASSENGER GASOLINE VEHICLE	FOUR-PASSENGER GASOLINE VEHICLE
POWER SOURCE		
Engine: 4-cycle OHV, 351 cc, 11.5 maximum HP@3600 RPM (per SAE J 1940/1349), single-cylinder, air-cooled, with pressure lubrication system	•	•
Fuel system: Side-draft carburetor with float bowl, fixed jets, fuel filters, and impulse fuel pump	•	•
Governor: Automatic ground-speed sensing, internally geared in unitized transaxle	•	•
Ignition: Transistor electronic ignition with electronic RPM limiter	•	•
Unitized transaxle: Fully synchronized forward and reverse with neutral and reduced speed reverse (11.8:1 forward, 17.1:1 reverse)	•	•
Torque converter: Automatic, variable-speed, dry type	•	•
Electrical system: 12 volt, 500 cca at 0 °F (-17.8 °C), 650 at 32 °F (0 °C). 105-minute reserve capacity and 35-amp charging capacity	•	•
STEERING/SUSPENSION/BRAKES		
Steering: Self-adjusting rack and pinion	•	•
Suspension: Front and rear tapered mono-leaf springs with dual hydraulic shocks	•	•
Brakes: Dual rear wheel self-adjusting brakes with cast iron drums and single brake pedal with automatic-release park brake	•	•
BODY/CHASSIS		
Frame/Chassis: Aluminum and composite	•	•
Front and rear body: Dupont Surlyn© Reflections	•	•
Body finish: High-gloss molded-in color	•	•
Tires: 18 x 8.5 – 8 tubeless, 4 ply rated	•	•
DIMENSIONS/WEIGHT		
Overall length	91.5 in. (232 cm)	104 in. (264 cm)
Overall width	47.25 in. (120 cm)	47.25 in. (120 cm)
Overall height (with canopy)	68.5 in. (174 cm)	71 in. (180 cm)
Overall height (at steering wheel)	48.0 in. (122 cm)	48.0 in. (122 cm)
Wheelbase	65.5 in. (166 cm)	65.5 in. (166 cm)
Ground clearance	4.5 in. (11 cm)	4.5 in. (11 cm)
Front wheel tread	34.5 (88 cm)	34.5 (88 cm)
Rear wheel tread	38.6 in. (98 cm)	38.6 in. (98 cm)
Weight (standard gasoline vehicle with canopy, with battery, without fuel)	651 lb. (295 kg)	768 lb. (348 kg)
Forward speed		
Curb clearance circle (diameter)	17 ft - 4 in. (528 cm)	17 ft - 4 in. (528 cm)
Standard seating capacity	2	4

TABLE CONTINUED ON NEXT PAGE

SPECIFICATIONS	TWO-PASSENGER GASOLINE VEHICLE	FOUR-PASSENGER GASOLINE VEHICLE
LIQUID CAPACITIES		
Engine crankcase (without filter)	32 oz. (.95 liter)	32 oz. (0.95 liter)
Engine crankcase (with filter)	38 oz. (1.12 liters)	38 oz. (1.12 liters)
Unitized transaxle	27 oz. (0.8 liter)	27 oz. (0.8 liter)
Fuel tank	6.7 gallons (25.4 liters)	6.7 gallons (25.4 liters)
TIRE PRESSURE		
Front and rear	12-14 psi (0.83-0.96 bars)	18-20 psi (1.24-1.38 bars)
NOISE AND VIBRATION		
Drive-by noise level to operator Test method: EN 12053:2001	70.9 dBA Uncertainty: 2 dBA	70.9 dBA Uncertainty: 2 dBA
Vibration at driver's seat Test method:EN 13059:2002	0.8 m/s^2 Uncertainty: 0.096 m/s^2	0.8 m/s^2 Uncertainty: 0.096 m/s^2

⚠ DANGER

- **See General Warnings on page 1-1.**

⚠ WARNING

- **See General Warnings on page 1-1.**

Important features unique to the different models covered in this manual are highlighted. Club Car, LLC recommends the owner/operator read and understand this manual and pay special attention to features specific to their vehicle(s).

Refer to the owner's manual provided with the vehicle for information on the following topics:

- Pre-Operation and Daily Safety Checklist
- Controls and Indicators
- Driving Instructions
- Towing
- Transporting on a Trailer
- Subsequent Owner Registration
- Warranties

SERIAL NUMBER IDENTIFICATION

The serial number of the vehicle is printed on a bar code decal mounted below the passenger side cup holder **(Figure 3-1, Page 3-2)**.

The two letters at the beginning of the serial number indicate the vehicle model. The following four digits indicate the model year and production week during which the vehicle was built. The six digits following the hyphen represent the unique sequential number assigned to each vehicle built within a given model year.

NOTE: *Have the vehicle serial number available when ordering parts or making inquiries.*

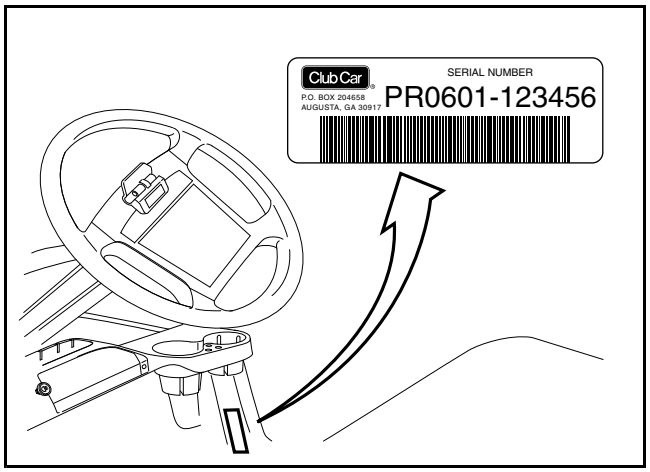

425

Figure 3-1 Serial Number Decal

SAFETY COMMITTEE

If the golf car is to be rented or is part of a fleet, we strongly recommend that a safety committee be appointed. One of the main concerns of this committee should be the safe operation of the golf cars.

This should include at a minimum:

- Where golf cars should be driven.
- Ensuring that proper warnings of driving hazards are displayed and visible. See below for list of signs available from Club Car Service Parts Department.
- Who should and who should not drive golf cars.
- Instructing first time drivers.
- Maintaining golf cars in a safe driving condition
- How various rules are to be enforced.

The safety committee should include all these items and such others as the committee feels necessary or appropriate.

STORAGE – GASOLINE VEHICLE

See General Warnings on page 1-1.

⚠ DANGER

- **Do not attempt to drain fuel when the engine is hot or while it is running.**
- **Be sure to clean up any spilled gasoline before operating the vehicle.**
- **Store fuel in an approved fuel container only. Store in a well-ventilated area away from sparks, open flames, heaters, or heat sources.**

DANGER CONTINUED ON NEXT PAGE

⚠ DANGER

- **Keep fuel out of the reach of children.**
- **Do not siphon fuel from the vehicle.**

⚠ WARNING

- **Turn the key switch to the OFF position, remove the key, and leave the Forward/Reverse handle in the NEUTRAL position during storage. This is to prevent unintentionally starting the vehicle or a fire hazard.**
- **Turn the fuel shut-off valve to closed (OFF) position (Figure 3-2).**

⚠ CAUTION

- **Batteries in a low state of charge will freeze at low temperatures.**

PREPARING THE GASOLINE VEHICLE FOR EXTENDED STORAGE

1. Store vehicle in a cool, dry place. This will minimize battery self-discharge. If the battery appears to be weak, have it charged by a trained technician. Use an automotive-type 12-volt battery charger rated at 10 amps or less.
2. Drain carburetor and seal the fuel tank.
   - 2.1. Place the Forward/Reverse handle in the NEUTRAL position and the neutral lockout cam in the MAINTENANCE position. Turn the fuel shut-off valve to the closed (OFF) position **(Figure 3-2, Page 3-4)** and run the engine until fuel remaining in the carburetor and fuel lines is depleted and the engine stalls. Return the neutral lockout cam to the OPERATE position.
   - 2.2. Loosen, but do not remove, the carburetor drain screw and drain fuel remaining in bowl into a small, clean container, then pour the fuel from the container into vehicle fuel tank. Tighten the carburetor drain screw.
   - 2.3. Disconnect fuel vent line from fuel tank vent nipple.
   - 2.4. Plug the fuel tank vent nipple so that it is air tight. We recommend using a slip-on vinyl cap.
3. Disconnect battery and spark plug wire(s). **See Disconnecting the Battery – Gasoline Vehicles on page 1-3.**
4. Battery should be clean and free of corrosion. Wash top and terminals of battery with a solution of baking soda and water (1 cup (237 mL) baking soda per 1 gallon (3.8 L) of water). Rinse solution off battery. Do not allow this solution to enter the battery. Let the terminals dry and then coat them with Battery Terminal Protector Spray (P/N 1014305).
5. To protect the engine, remove spark plug and pour 1/2 ounce (14.2 mL) of SAE 10 weight oil into the engine through the spark plug hole. Rotate engine crankshaft by hand several times and then install the spark plug.
6. Adjust tires to recommended tire pressure. **See Vehicle Specifications, Section 2, Page 2-1.**
7. Perform semiannual periodic lubrication. **See Periodic Lubrication Schedules on page 10-3.**
8. Thoroughly clean front body, rear body, seats, engine compartment, and underside of vehicle.
9. Do not engage the park brake. Chock the wheels to prevent the vehicle from rolling.

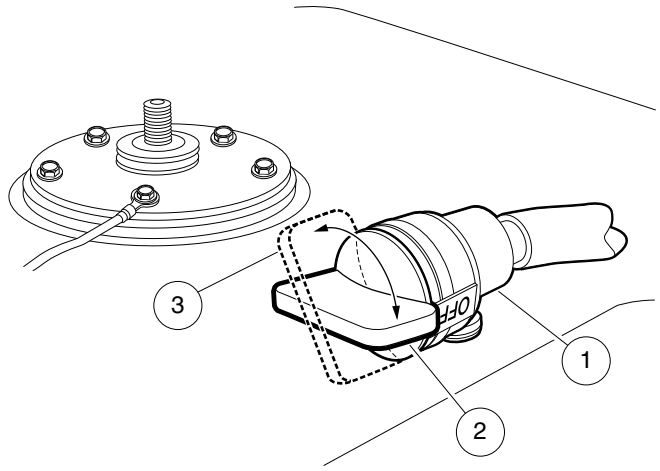

1. Fuel Shut-off Valve 2. Closed (OFF) 3. Open (ON) NOTE: When selecting valve position, ensure that it is fully opened or fully closed.

614

Figure 3-2 Fuel Shut-off Valve

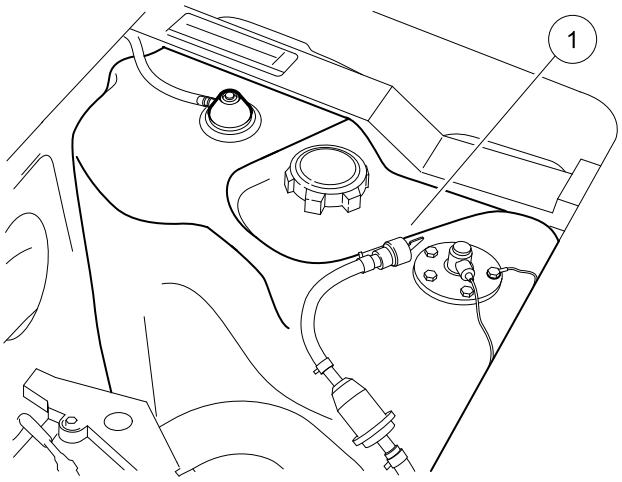

1. Fuel Shut-off Valve

63A

Figure 3-3 Fuel Tank

RETURNING THE STORED GASOLINE VEHICLE TO SERVICE

1. Restore the fuel systems to operation **(Figure 3-3)**.
   1.1. Remove the plug from the fuel tank vent.
   1.2. Connect the vent tube to the fuel tank vent.
2. Connect battery and spark plug wire(s). **See Connecting the Battery – Gasoline Vehicles on page 1-3.**
3. Completely open the fuel shut-off valve (1) **(Figure 3-2)**. Make sure the valve is fully open. A partially closed fuel shut-off valve combined with the use of the choke can result in a fouled spark plug and engine failure.
4. Place the Forward/Reverse handle in the NEUTRAL position and the neutral lockout cam in the MAINTENANCE position. Crank the engine until fuel is pumped into the carburetor and fuel lines and the engine starts. Turn the engine off and return the neutral lockout cam to the OPERATE position. **See following NOTE.**

NOTE: *Due to the oil added to the engine in preparation for storage, engine may smoke excessively for a short time when it is run for the first time after storage.*

5. Adjust tires to recommended tire pressure. See Section 2 – Vehicle Specifications.
6. Perform the **Pre-Operation and Daily Safety Checklist in the appropriate Owner's Manual**.

⚠ DANGER

- **See General Warnings on page 1-1.**

⚠ WARNING

- **See General Warnings on page 1-1.**

CLEANING THE VEHICLE

See General Warnings on page 1-1.

CAUTION

- **Do not use detergents or cleaning solvents that contain ammonia, aromatic solvents, or alkali materials on body panels or seats.**
- **Do not allow battery acid to drip on body panels. Battery acid will cause permanent damage. Wash spilled battery acid from body panels immediately.**

Club Car Precedent vehicles are equipped with Surlyn® front and rear bodies. Use only commercially available automotive cleaners with a sponge or soft cloth for normal cleaning. A garden hose at normal residential water pressure is adequate.

Club Car does not recommend any type of pressure washing or steam cleaning. Such a process (especially if the vehicle has a Surlyn rear body that is removed) will expose electrical components to moisture. Moisture entering electrical components can result in water damage and subsequent component failure.

Use non-abrasive wax products. Do not use abrasive leveling or rubbing compounds; these will permanently dull the gloss. Battery acid, fertilizers, tars, asphalt, creosote, paint, or chewing gum should be removed immediately to prevent possible stains. **See following CAUTION and NOTE.**

CAUTION

- **Use of leveling or rubbing compounds will permanently dull finish of vehicle.**
- **Do not apply wax products to the black plastic material of the front and rear underbody, the front bumper, or the textured area of the rear beauty panel marked "NO STEP." Wax will cause these surfaces to become discolored.**

NOTE: *Dispose of waste water properly.*

SEAT

To preserve seat appearance, clean regularly with mild soap or detergent applied with a sponge or soft cloth. Use a soft bristle brush to clean areas that are especially soiled. Use the following guidelines:

Light Soiling: A solution of 10% liquid dish soap and warm water applied with a soft, damp cloth is recommended. A soft bristle brush may be used if necessary. Wipe off any residue with a water dampened cloth.

Difficult Stains: Dampen a soft, white cloth with a solution of 10% household bleach (sodium hypochlorite) and 90% water. Rub gently to remove stain, then rinse with a water dampened cloth to remove bleach concentration.

More Difficult Stains: Perform previous procedure using full-strength bleach, or allow bleach to puddle on affected area for approximately 30 minutes. Rinse with a water dampened cloth to remove any remaining bleach concentration.

CAUTION

- **To prevent damage to the vehicle when removing difficult stains or heavy soiling, remove the seat bottom from the vehicle first.**

FRONT AND REAR BODY REPAIR

See General Warnings on page 1-1.

STRESS LINES OR STREAKS

Repeatedly flexing the Surlyn body can cause white stress lines or streaks in the finish. To remove them:

1. Hold a heat gun 12 inches (30 cm) away from the affected area, with the gun on its lowest heat setting.
2. Slowly wave the heat gun back and forth over the affected area until the streak fades.
3. It may be necessary to move the gun closer to the body to fade the streak, but under no circumstance should the gun be held closer than 6 inches (15 cm) to the body. **See following CAUTION.**

CAUTION

- **Holding the heat gun too close to the body could melt the body or damage the finish.**

MINOR IMPACT DAMAGE/DEFORMATIONS

Minor impact damage to a Surlyn body can be repaired using a procedure similar to the one used to remove stress lines. To remove deformations resulting from minor impact damage:

1. Hold a heat gun 12 inches (30 cm) away from the affected area, with the gun on its lowest heat setting.
2. Periodically remove the heat gun and bend the body, using a push block, in the opposite direction of the deformation.
3. Continue heating and bending the body until the original shape returns. Under no circumstance should the gun be held closer than 6 inches (15 cm) to the body. **See preceding CAUTION.**

MINOR SCRATCHES AND SURFACE BLEMISHES

For minor scratches or blemishes in the Surlyn body that do not penetrate the finish:

1. Thoroughly clean the affected area using a strong, non-abrasive detergent and hot water, then clean with Ultra-Kleen® Solvent Cleaner to remove any oil-based contaminants.
2. Lightly buff imperfection with a clean soft cloth or buff pad. Do not use any kind of rubbing (abrasive) compound on body assemblies.
3. Wax the entire body part to restore luster and weather protection.

GOUGES, PUNCTURES, TEARS, LARGE SCRATCHES, AND ABRASIONS

Touch-up is not recommended. Replace the entire body part or have it repaired by a professional paint and body repair shop with experience repairing Surlyn bodies.

FRONT BODY

See General Warnings on page 1-1.

FRONT BODY REMOVAL

1. Remove the four screws (2) and pull the brow cap (1) from the brow and fascia assembly (4) **(Figure 4-1, Page 4-4)**.
2. Pull the front beauty panel (3) up and away from the brow and fascia assembly (4), disengaging the snap tabs.
3. If the vehicle is equipped with a canopy, loosen the canopy support cover then loosen, but do not remove, the front canopy support bolts. If there is no canopy, remove the non-canopy cover.
4. Remove the five screws (8) and lift the brow and fascia assembly (4) from the front underbody.
5. Remove the five screws (7) to separate the front fascia (6) from the brow (5).

FRONT BODY INSTALLATION

1. Install fascia (6) to brow (5) with five screws (7). Tighten screws to 3.3 ft-lb (4.5 N·m) **(Figure 4-1, Page 4-4)**.
2. Install brow and fascia assembly (4) to front underbody with five screws (8). Tighten screws to 1.8 ft-lb (2.5 N·m).
3. Install front beauty panel (3) over brow (5). Tabs on the forward edge of the front beauty panel should fit into slots between the fascia and the brow.
4. Position brow cap (1) to cover the edge of both the brow (5) and the front beauty panel (3). Secure brow cap (1) with four screws (2). Tighten screws to 25 in-lb (2.8 N·m).

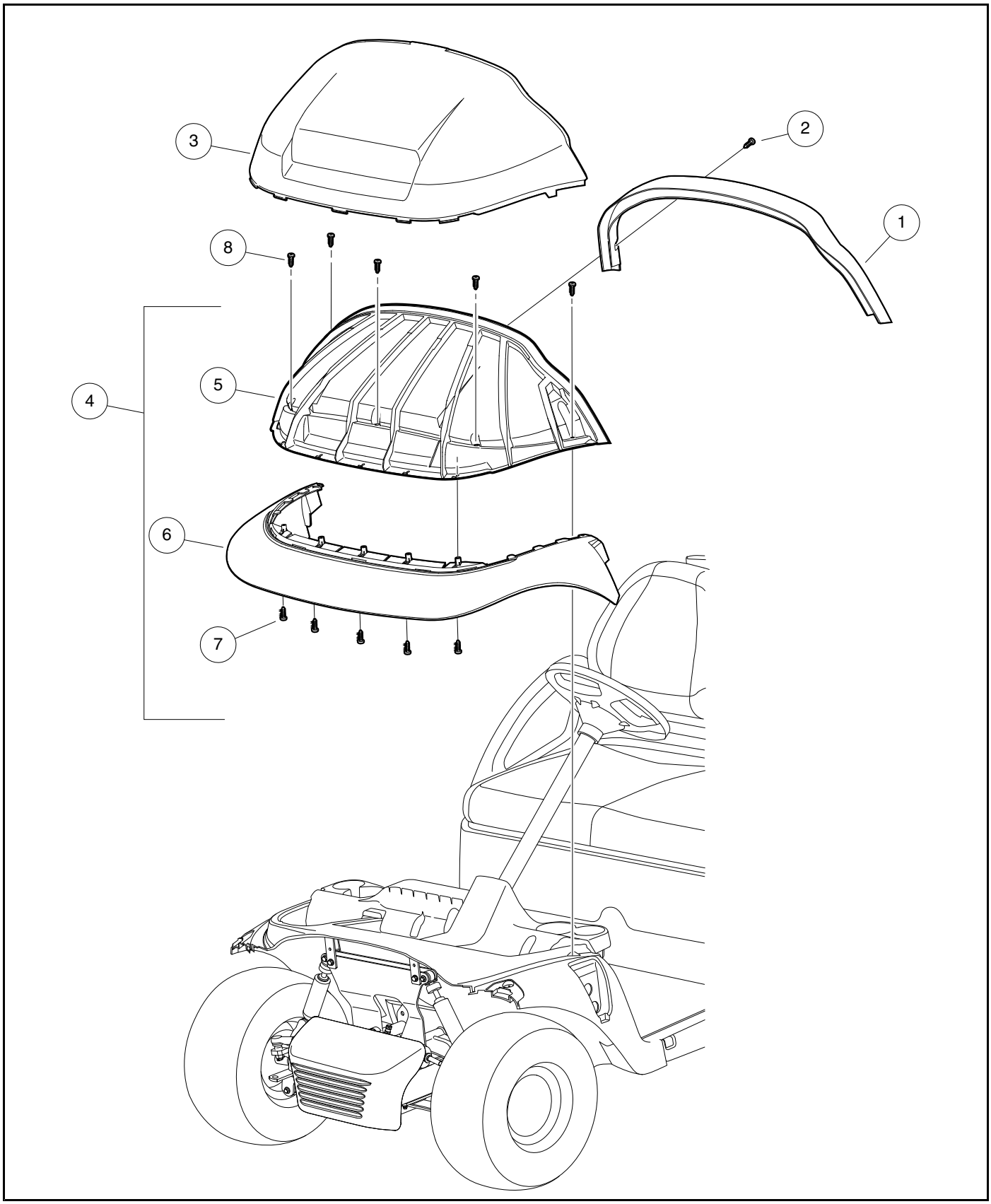

616

Figure 4-1 Front Body

FRONT BUMPER

The underbody bracket (1) connects the front suspension to the front underbody **(Figure 4-2, Page 4-5)**. Each bracket is secured in place by two taptite screws (2) tightened to 13 ft-lb (17.6 N·m).

The front bumper (3) is attached to the vehicle frame rails by nuts (5) and bolts (4). The nuts (5) need to go on top of the bumper attaching brackets, always insert the bolts (4) through the bottom. The nuts are tightened to 13.3 ft-lb (18 N·m).

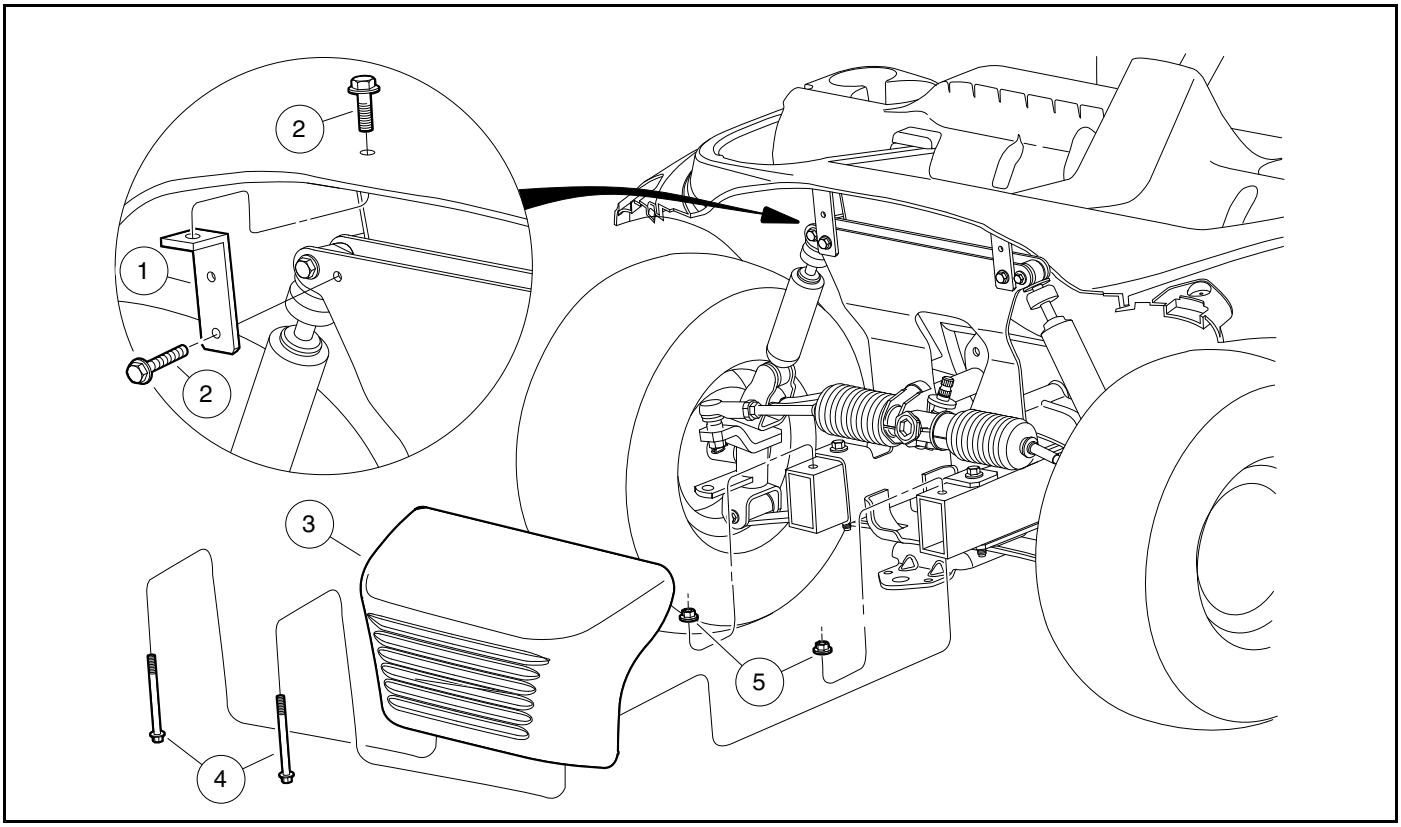

617

Figure 4-2 Bracket and Front Bumper

INSTRUMENT PANEL

See General Warnings on page 1-1.

INSTRUMENT PANEL REMOVAL

1. Remove two screws (1) at sides and one screw (2) on top of instrument panel (3) **(Figure 4-3, Page 4-6)**.
2. Tilt instrument panel up to release it from the dash assembly (4).
3. Disconnect the electrical connector on the passenger side of the instrument panel (3) and remove the panel.
4. Remove two screws (5) and plastic rivet (6) and remove dash assembly (4) from vehicle.

INSTRUMENT PANEL INSTALLATION

1. Position dash assembly (4) on vehicle. Make sure tabs on the forward edge engage to front underbody. Secure assembly in place with two screws (5) and plastic rivet (6) **(Figure 4-3, Page 4-6)**. Tighten screws to 8.8 ft-lb (12 N·m).
2. Install the instrument panel.
   - 2.1. Connect the electrical connector on the instrument panel to the harness connector.
   - 2.2. Position the instrument panel (3) on the dash assembly. Make sure tabs on upper edge properly engage with the corresponding slots on the dash assembly. Ensure that there are no wires exposed or pinched during positioning.
   - 2.3. Secure instrument panel to the dash assembly with screws (1 and 2). Tighten screws to 1.8 ft-lb (2.5 N·m).

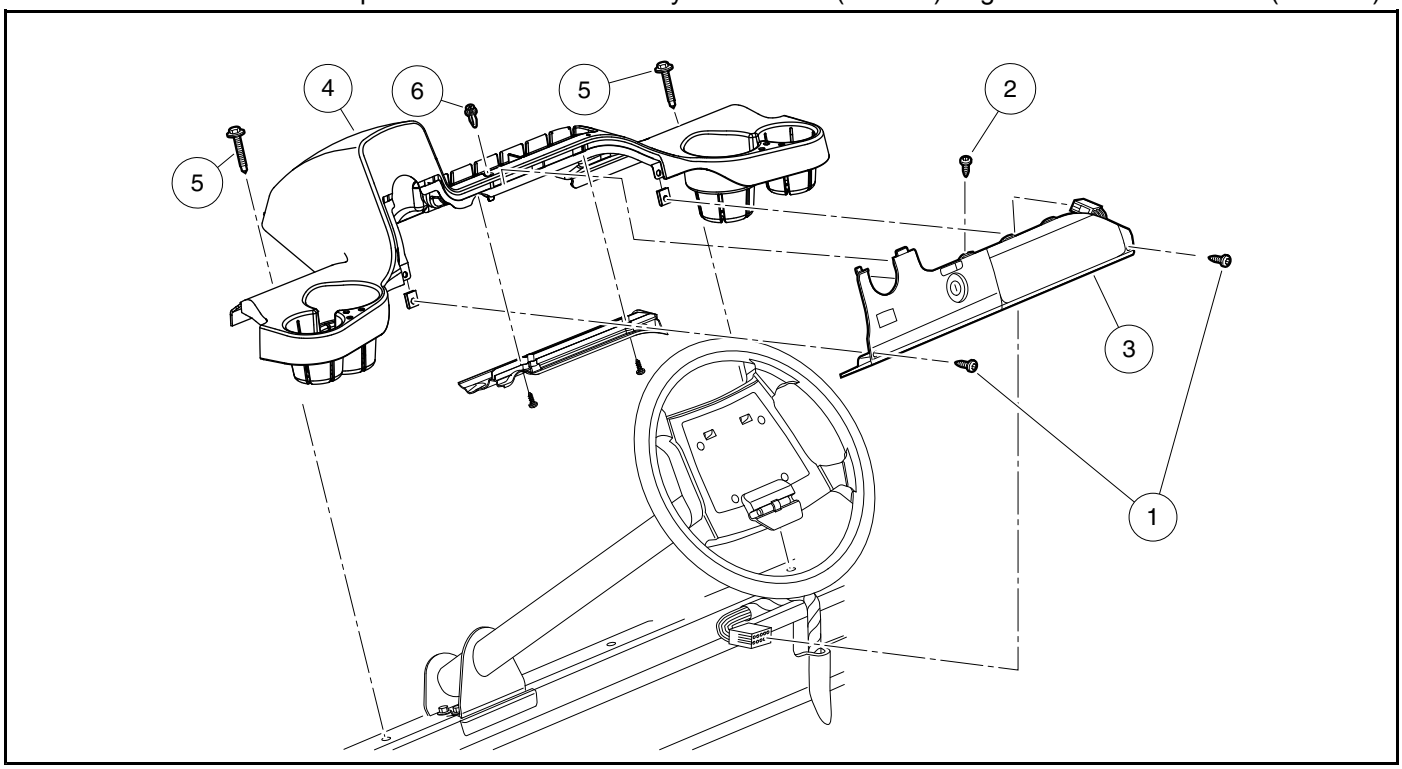

654

Figure 4-3 Instrument Panel

FLOOR MAT AND RETAINERS

See General Warnings on page 1-1.

The floor mat retainers secure the floor mat to the vehicle and also provide a clean appearance to the side of the vehicle. Normally, if only the floor mat (3) needs to be removed, the screws (2) must be removed to allow the floor mat to be slid from beneath the retainers (1) **(Figure 4-4, Page 4-7)**.

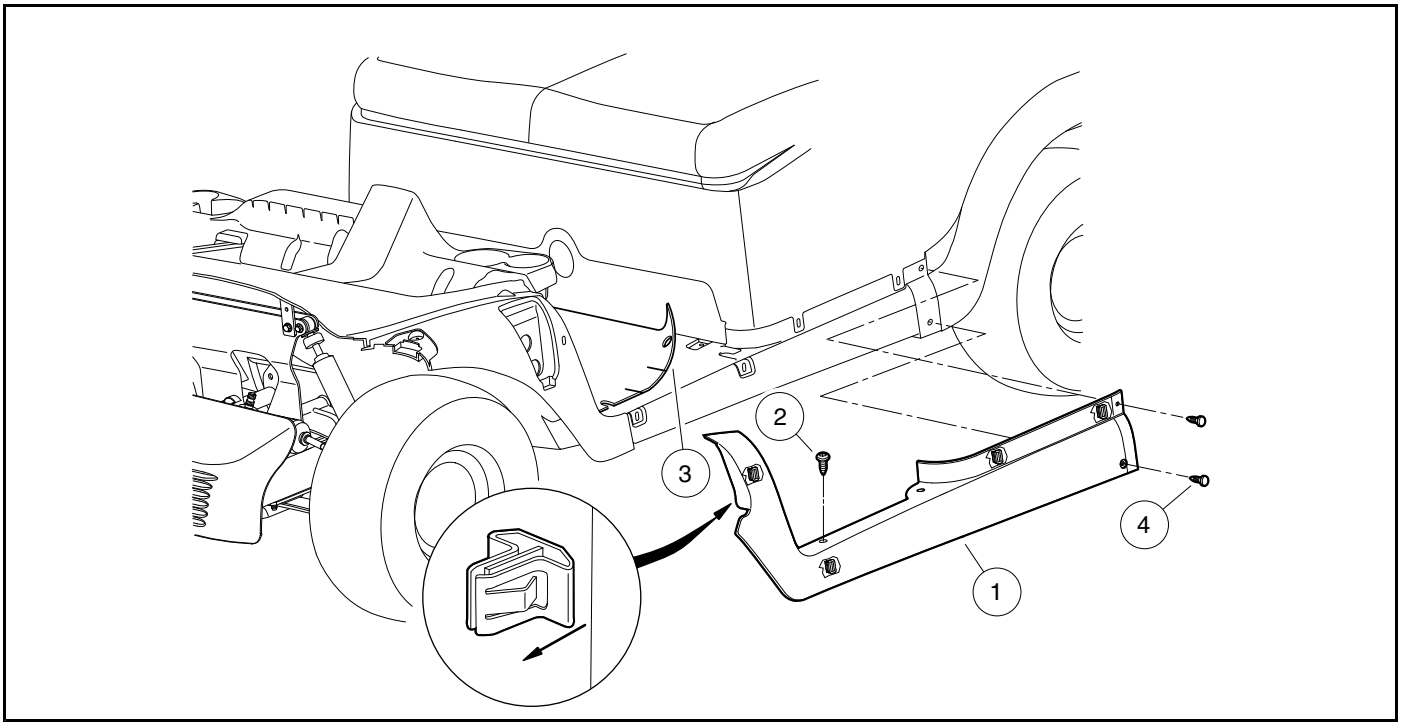

1382

Figure 4-4 Floor Mat Retainer

FLOOR MAT RETAINER REMOVAL

1. Remove screws (2) from top of retainer (1) **(Figure 4-4, Page 4-7)**.
2. Remove push rivets (4) from rear corners of retainer.
3. Carefully pull on retainer to separate the trim clips from their respective slots. Trim clips do not normally need to be removed from the retainer.

FLOOR MAT RETAINER INSTALLATION

1. Position the retainer on the vehicle and press firmly to engage the trim clips to the vehicle **(Figure 4-4, Page 4-7)**.
2. Ensure the floor mat is properly positioned beneath the top flange of the retainer and loosely install two screws (2).
3. Install two push rivets (4) at the rear corners of the retainer.
4. Tighten screws (2) to 4.4 ft-lb (6.0 N·m).

KICK PLATE AND CHOKE BUTTON BEZEL

See General Warnings on page 1-1.

KICK PLATE AND CHOKE BUTTON REMOVAL

1. Access the inside of the fuel bucket and disconnect hair spring cotter pin (2) from choke rod (3). Remove rod from the choke **(Figure 4-5, Page 4-9)**.
2. Remove floor mat. **See Floor Mat and Retainers on page 4-7.**
3. Remove three screws (1) that hold the kick plate (4) to the vehicle.
4. Remove the two front screws (7) that hold the beauty panel to the vehicle. Raise the forward portion of the rear beauty panel to disengage it from the tabs on the upper portion of the kick plate.
5. Remove kick plate from vehicle.
6. Disengage the choke rod (3) from the button (5).
7. Press in on the tabs on the top and bottom of button (5) to free the button from the kick plate. Remove button (5) and spring (6).

KICK PLATE AND CHOKE BUTTON INSTALLATION

1. Place spring (6) in kick plate (4) and orient the tabs on the button (5) with the slots in the kick plate. Press in the button until it snaps in place in the kick plate **(Figure 4-5, Page 4-9)**.
2. Insert the tabbed end of the choke rod (3) into the rear slot on the button (5).
3. Position the kick plate (4) on the vehicle and secure with three screws (1). Ensure front lower edge of rear beauty panel mates with the kick plate. Tighten screws to 3.3 ft-lb (4.5 N·m).
4. Insert choke rod (3) through the choke actuator. Secure the rod with hair spring cotter pin (2),
5. Install two front screws to secure the rear beauty panel. Tighten screws to 3.7 ft-lb (5 N·m).
6. Install floor mat. **See Floor Mat and Retainers on page 4-7.**

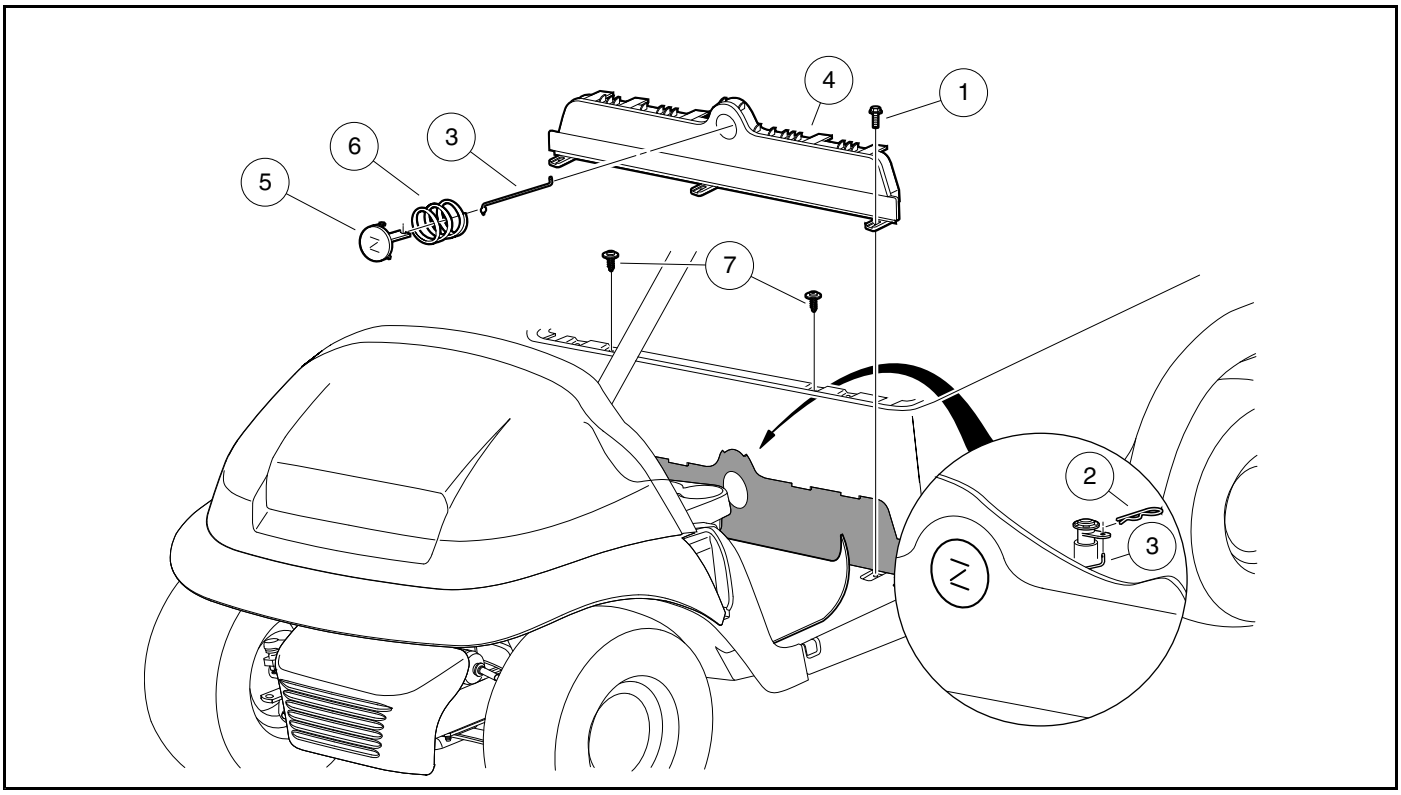

620

Figure 4-5 Kick Plate and Choke Button

REAR BODY – TWO-PASSENGER VEHICLES

See General Warnings on page 1-1.

UNIVERSAL ACCESSORY MOUNTING

The Structural Accessory Module (SAM) includes two threaded inserts on both the driver side and the passenger side **(Figure 4-6, Page 4-10)**. These inserts serve as common attachment points (1) for various accessories. Accessories that can be mounted to the SAM include single or dual sand bottles, sand bucket, and the club cleaner.

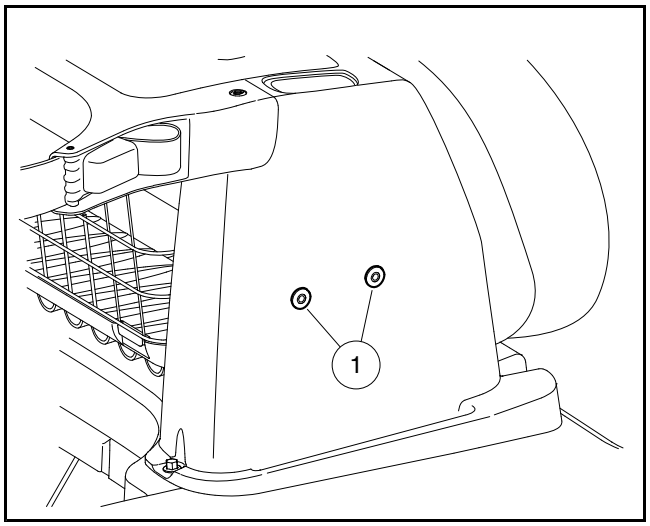

621

Figure 4-6 Universal Accessory Mounting

BACKREST AND STRUCTURAL ACCESSORY MODULE (SAM)

SAM Removal

1. If the vehicle has a canopy, the rear upright supports must be removed from the SAM.
2. Remove four bolts (4) to release the SAM (3) from the vehicle **(Figure 4-7, Page 4-11)**.

SAM Installation

Position the SAM (3) over its mounting holes and secure with four screws (4). Tighten screws to 53 in-lb (6 N·m).

Backrest

The backrest (1) is secured to the SAM (3) with two screws (2) **(Figure 4-7, Page 4-11)**. When replacing the backrest, tighten screws (2) to 5.9 ft-lb (8 N·m).

Bag Rack Removal

1. Remove two screws (10) to release the bag hoop (6) and related components from the SAM (3) **(Figure 4-7, Page 4-11)**.
2. Bag strap (8) may be released by removing two plastic barrel connectors (9) and one screw (12).
3. Bag strap buckles (7) may be snapped out of bag hoop (6).

Bag Rack Installation

Installation is the reverse of removal. Tighten screw (12) to 4.8 ft-lb (6.5 N·m) and screws (10) to 44 in-lb (5 N·m).

Sweater Basket

The sweater basket (11) is secured to the bag hoop assembly by three screws (12). Tabs on the upper edge of the basket align with holes in the bag hoop (6) for installation purposes. Tighten screws (12) to 44 in-lb (5 N·m) for steel wire sweater basket or 31 in-lb (3.5 N·m) for molded-plastic sweater basket **(Figure 4-7, Page 4-11)**.

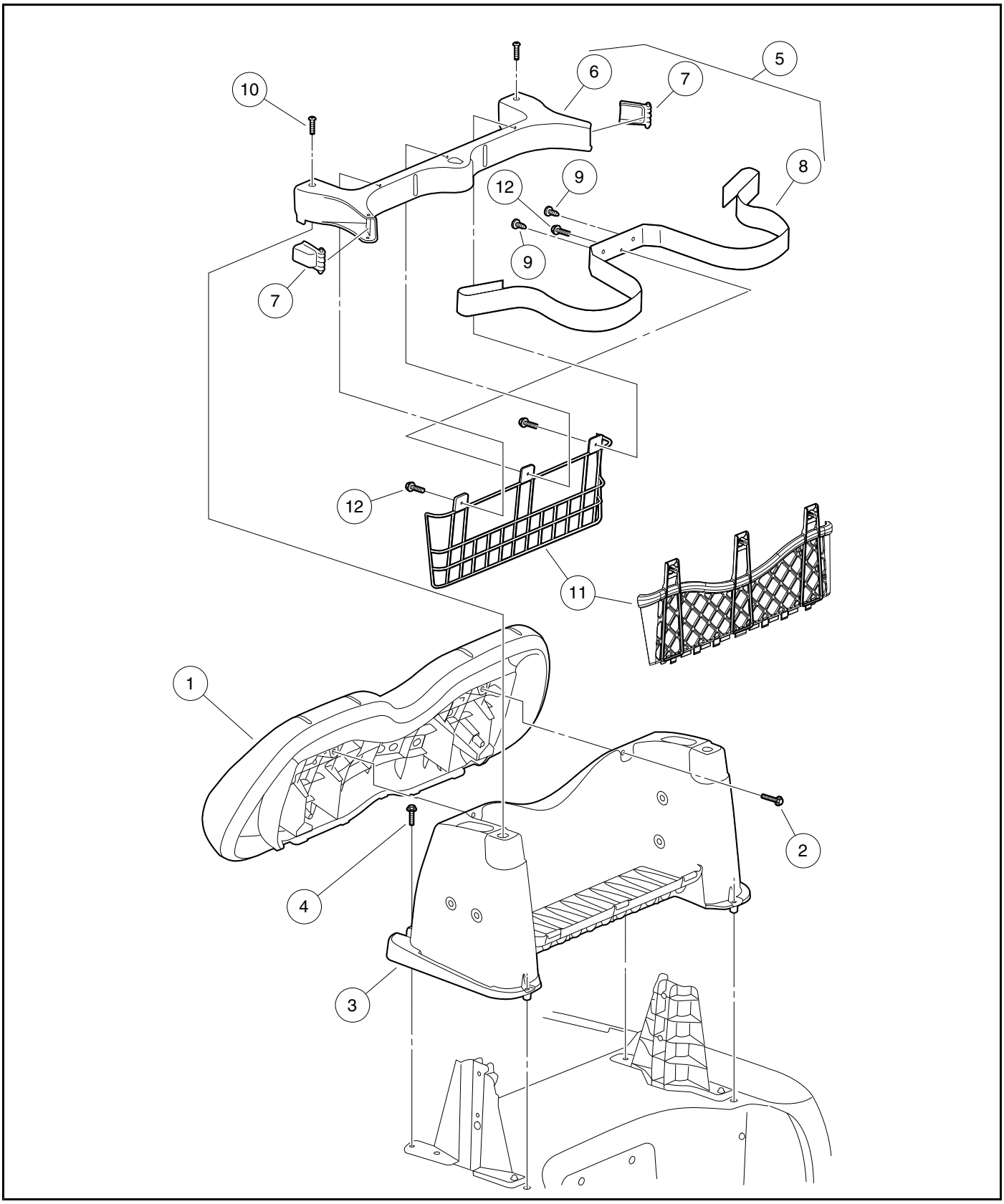

622

Figure 4-7 Backrest and SAM

REAR BODY COMPONENTS (TWO-PASSENGER)

Rear Beauty Panel Removal

1. Remove SAM. **See SAM Removal on page 4-10.**
2. Remove one screw (3) from each canopy support bracket (1 and 2) **(Figure 4-8, Page 4-13)**. Remove canopy supports.
3. Remove four screws (13) attaching the rear beauty panel (12) to the fuel bucket.
4. Remove screw (15) and remove shift handle (14) from vehicle.
5. Remove two screws (17) to remove shift cover (16) from rear beauty panel (12).
6. Lift rear beauty panel from vehicle.

Rear Beauty Panel Installation

1. Install rear beauty panel (12) on vehicle. Make sure body clips on the rear of the beauty panel engage the mating slot in the rear underbody (4). Secure beauty panel in place with four screws (13). Tighten screws to 3.7 ft-lb (5 N·m) **(Figure 4-8, Page 4-13)**.
2. Position the shift cover (16) on the front of beauty panel (12) and secure with two screws (17). Tighten screws to 22 in-lb (2.5 N·m).
3. Position handle (14) on shift mechanism. Secure handle in place with screw (15). Tighten screw to 14 in-lb (1.6 N·m).
4. Position canopy support brackets (1 and 2) on vehicle and secure each with one screw (3). Tighten screws to 53 in-lb (6 N·m).

Access Panel

Access panel (6) is secured to the rear underbody (4) with two push rivets (7) **(Figure 4-8, Page 4-13)**. When replacing the panel, insert push rivets (7) to hold the panel in place.

Rear Underbody Removal

1. Remove four screws (5) attaching the rear underbody (4) to vehicle **(Figure 4-8, Page 4-13)**.
2. Remove two screws (18) and washers (23) that attach the underbody to the two liners (8 and 9).
3. Lift the rear edge of the rear underbody (4) until the front portion slides out from beneath the front underbody. Remove the rear underbody from the vehicle.

Rear Underbody Installation

Install rear underbody (4) on the vehicle **(Figure 4-8, Page 4-13)**. Install two washers (23) and screws (18) to secure the underbody to the two wheel liners (8 and 9) and install four screws (5) to secure the underbody to the vehicle. Tighten screws (5 and 18) to 3.7 ft-lb (5 N·m).

Wheel Liner Removal

NOTE: *The wheel liners changed from molded-plastic to steel in late 2009 model year.*

Remove bolts (10) to release liners (8 and 9) from vehicle **(Figure 4-8, Page 4-13)**.

Wheel Liner Installation

Position liners (8 and 9) on vehicle and secure with bolts (10). Bolts (10) thread into J-clips (11) attached to the inner-frame rail. Tighten bolts to 53 in-lb (6 N·m) for molded-plastic liners or 123 in-lb (14 N·m) for steel liners.

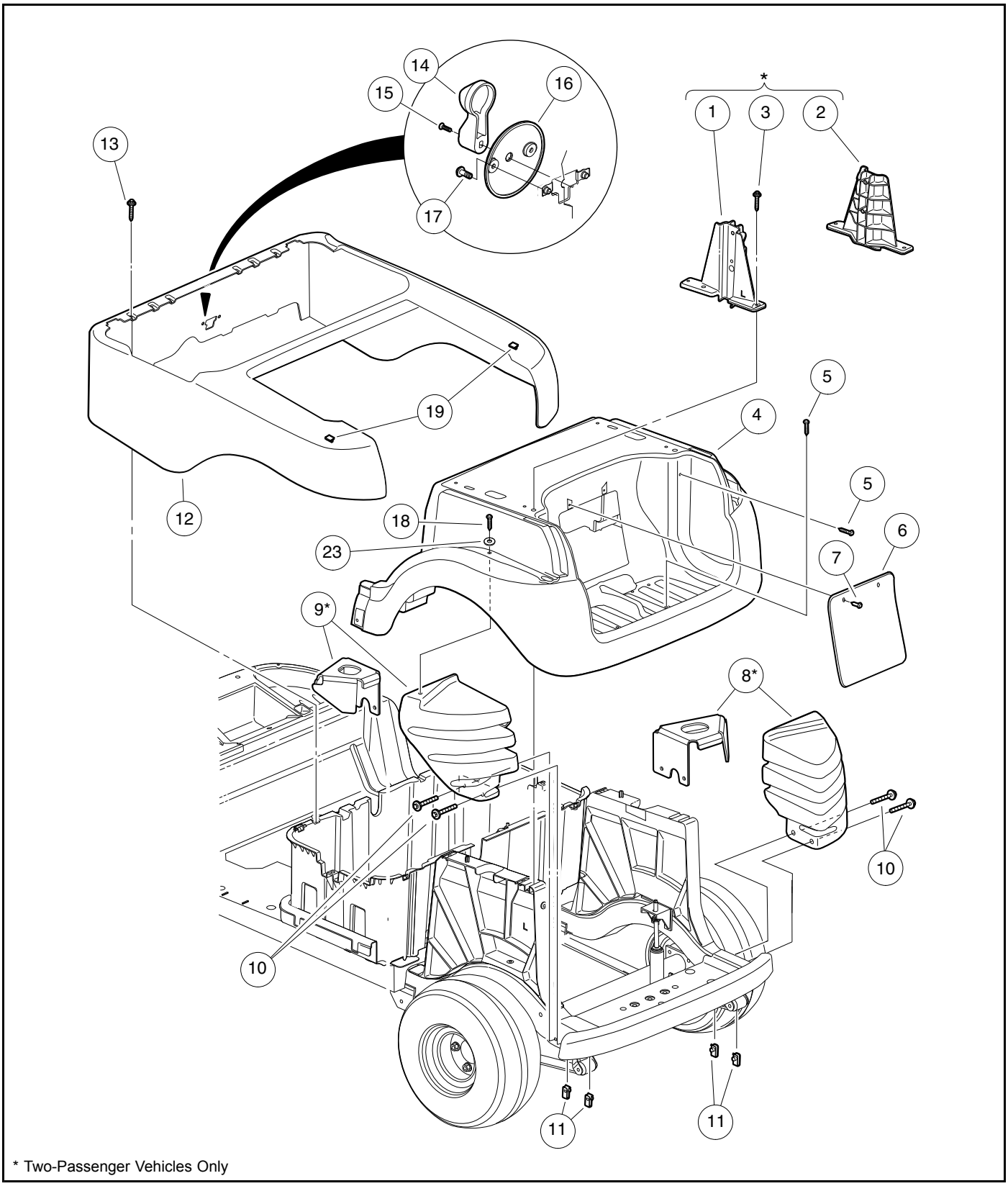

623

Figure 4-8 Rear Body Components

REAR BODY – FOUR-PASSENGER VEHICLES

See General Warnings on page 1-1.

SEAT BACKS

Seat Back Removal

Remove screws (9 or 13) securing seat back (8 or 11) to seat support and remove the seat back **(Figure 4-9, Page 4-14)**.

Seat Back Installation

Secure seat back (8 or 11) to seat support with screws (9 or 13). Tighten screws to 71 in-lb (8 N·m) **(Figure 4-9, Page 4-14)**.

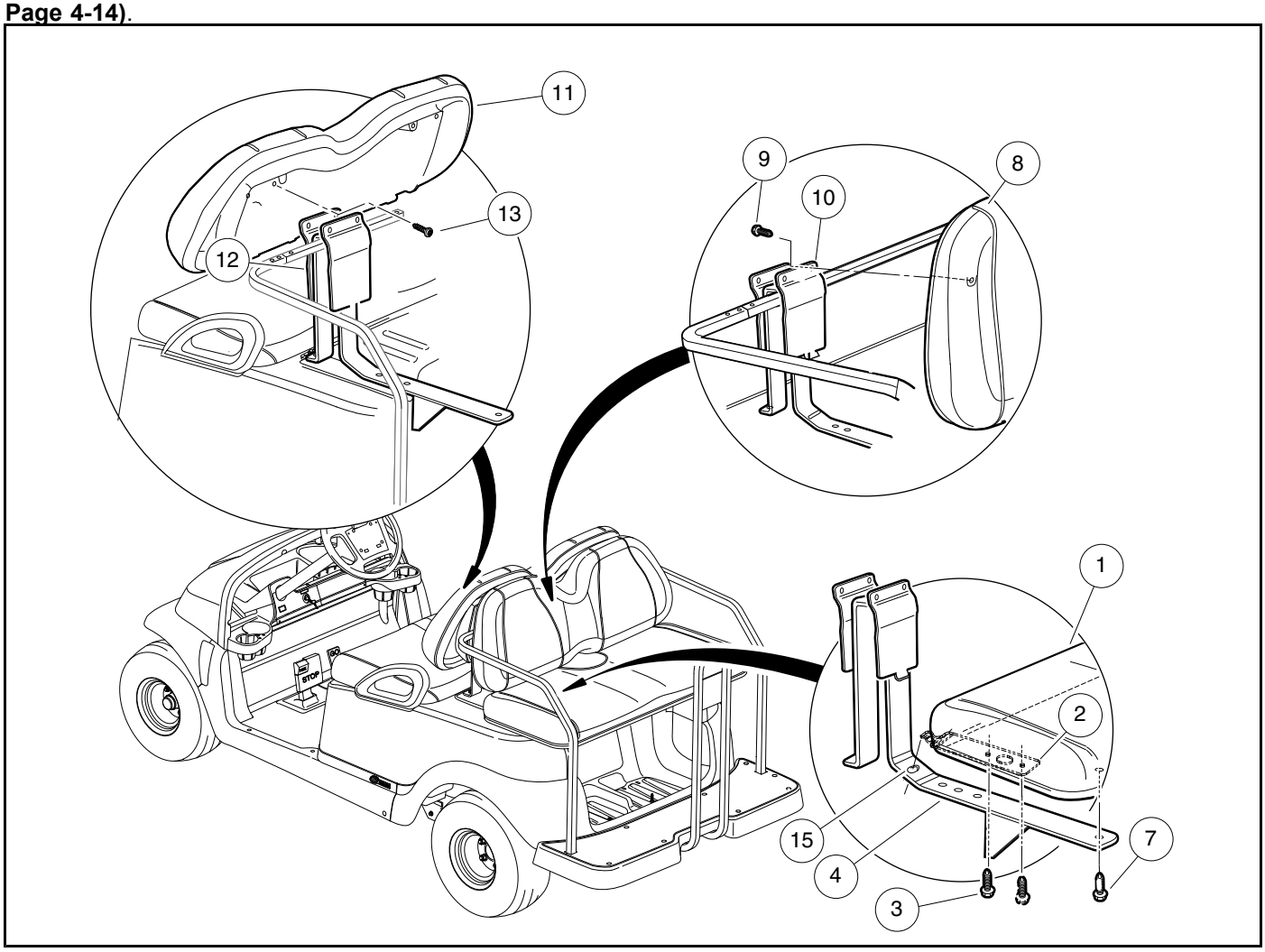

626

Figure 4-9 Seats (Four-Passenger Vehicles)

SEAT SUPPORT

Seat Support Removal

1. Remove screws (8 and 11) securing the rear hip restraints (6) and remove the hip restraints from the vehicle **(Figure 4-10, Page 4-15)**.
2. Remove the screws (5) and bolts (4) from the seat support (3) and remove the seat support from the vehicle.

Seat Support Installation

1. Install in the reverse order of removal.
2. Tighten bolts (4) to 53 in-lb (6 N·m). Tighten screws (5) to 44 in-lb (5 N·m). Tighten bolts (8 and 11) to 124 in-lb (14 N·m) **(Figure 4-10, Page 4-15)**.

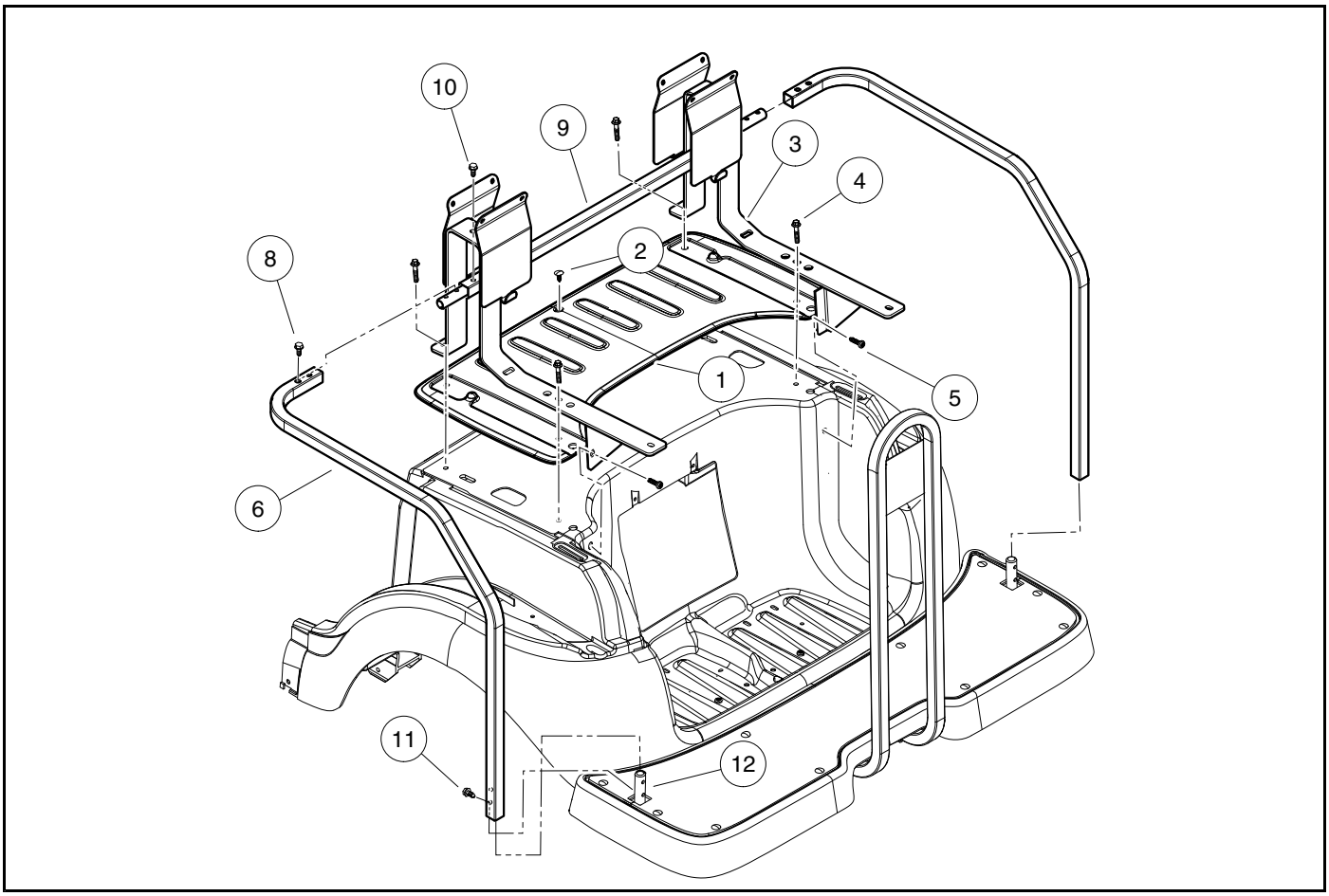

624

Figure 4-10 Seat Supports (Four-Passenger Vehicles)

FOOT DECK

Foot Deck Removal

1. Remove screws (8 and 11) securing the rear hip restraints (6) and remove the hip restraints from the vehicle **(Figure 4-10, Page 4-15)**.
2. Remove the four bolts (2) securing the foot deck (1) to the vehicle frame **(Figure 4-11, Page 4-16)**.

Foot Deck Installation

1. Install foot rest in reverse order of removal.
2. Tighten bolts (2) to 123 in-lb (14 N·m) **(Figure 4-11, Page 4-16)**.

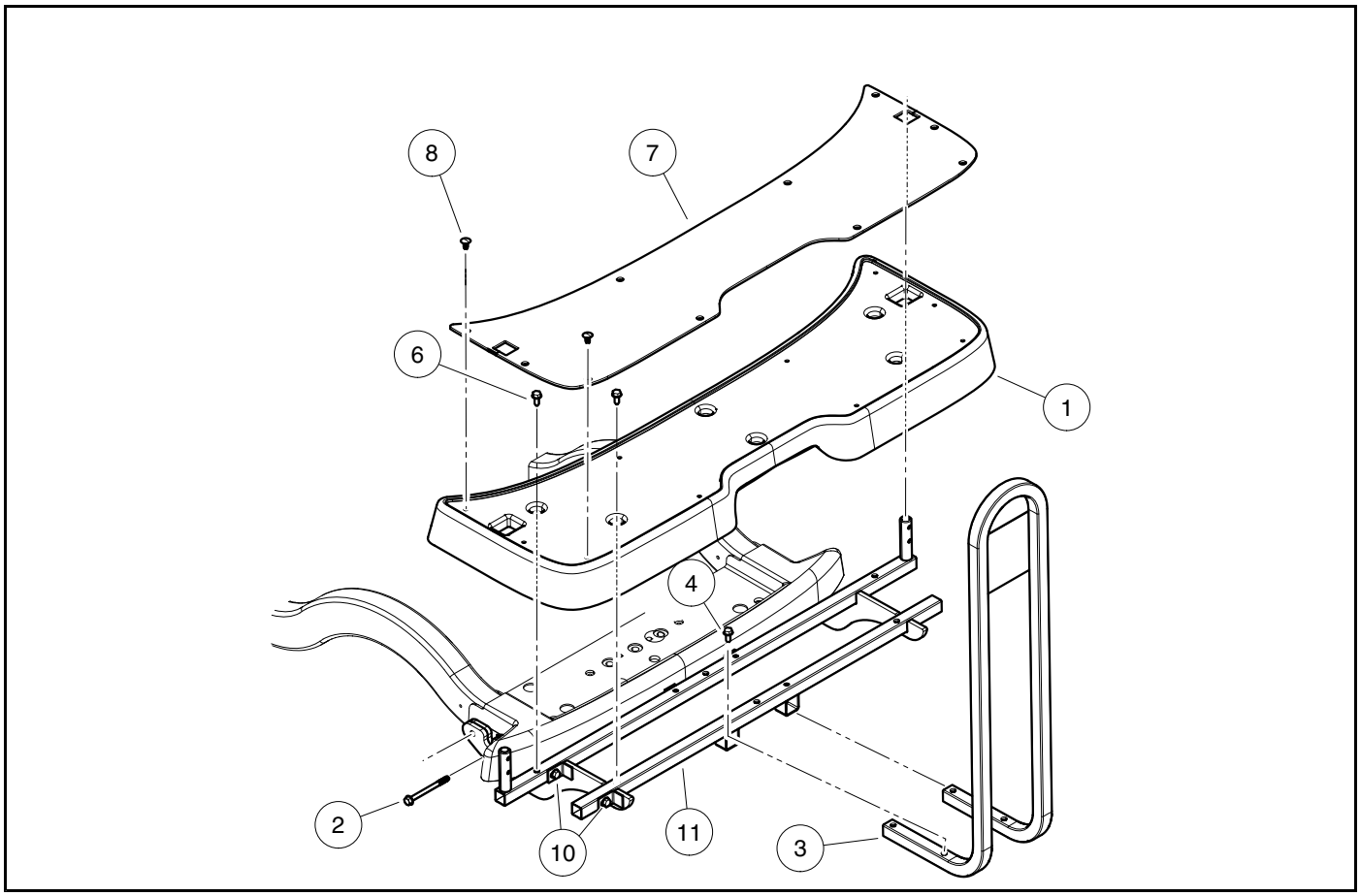

625

Figure 4-11 Foot Deck (Four-Passenger Vehicles)

REAR BODY COMPONENTS (FOUR-PASSENGER)

Rear Beauty Panel Removal

1. Remove seat support. **See Seat Support Removal on page 4-14.**
2. Remove four screws (13) attaching the rear beauty panel (12) to the fuel bucket **(Figure 4-8, Page 4-13)**.
3. Remove screw (15) and remove shift handle (14) from vehicle.
4. Remove two screws (17) to remove shift cover (16) from rear beauty panel (12).
5. Lift rear beauty panel from vehicle.

Rear Beauty Panel Installation

1. Install rear beauty panel (12) on vehicle. Make sure body clips (17) on the rear of the beauty panel engage the mating slot in the rear underbody. Secure beauty panel in place with four screws (13). Tighten screws to 3.7 ft-lb (5 N·m) **(Figure 4-8, Page 4-13)**.
2. Position the shift cover (16) on the front of beauty panel (12) and secure with two screws (17). Tighten screws to 22 in-lb (2.5 N·m).
3. Position handle (14) on shift mechanism. Secure handle in place with screw (15). Tighten screw to 14 in-lb (1.6 N·m).
4. Install seat support. **See Seat Support Installation on page 4-15.**

Access Panel

Access panel (6) is secured to the rear underbody (4) with two push rivets (7) **(Figure 4-8, Page 4-13)**. When replacing the panel, insert push rivets (7) to hold the panel in place.

Rear Underbody Removal

1. Remove four screws (5) attaching the rear underbody (4) to vehicle **(Figure 4-8, Page 4-13)**.
2. Lift the rear edge of the rear underbody (4) until the front portion slides out from beneath the front underbody. Remove the rear underbody from the vehicle.

Rear Underbody Installation

Install rear underbody (4) on the vehicle **(Figure 4-8, Page 4-13)**. Install four screws (5) to secure the underbody to its vehicle. Tighten screws (5 and 18) to 3.7 ft-lb (5 N·m).

CANOPY – TWO-PASSENGER

See General Warnings on page 1-1.

CAUTION

- **To prevent damage to the canopy, do not remove the canopy supports (3, 7, and 10) from the vehicle without first removing the canopy (1) (Figure 4-12, Page 4-18).**

TWO-PASSENGER CANOPY REMOVAL

1. Remove the two nuts (9) and two bolts (8) from the canopy (1) and each front canopy support (7 and 10) **(Figure 4-12, Page 4-18)**.
2. Remove the nuts (5) and bolts (4) from the canopy (1) and each rear support (3).
3. Lift canopy (1) away from front canopy supports (7 and 10) and rear supports (3).
4. Remove screws (14) securing front canopy support covers to front body.
5. Slide canopy support covers (12 and 13) up front canopy supports (7 and 10) to gain access to bolts (11).
6. Remove two bolts (11) from each front canopy support (7 and 10) and remove canopy supports from the vehicle.
7. Remove bolt (6) from each rear support (3) and pull rear supports from vehicle.

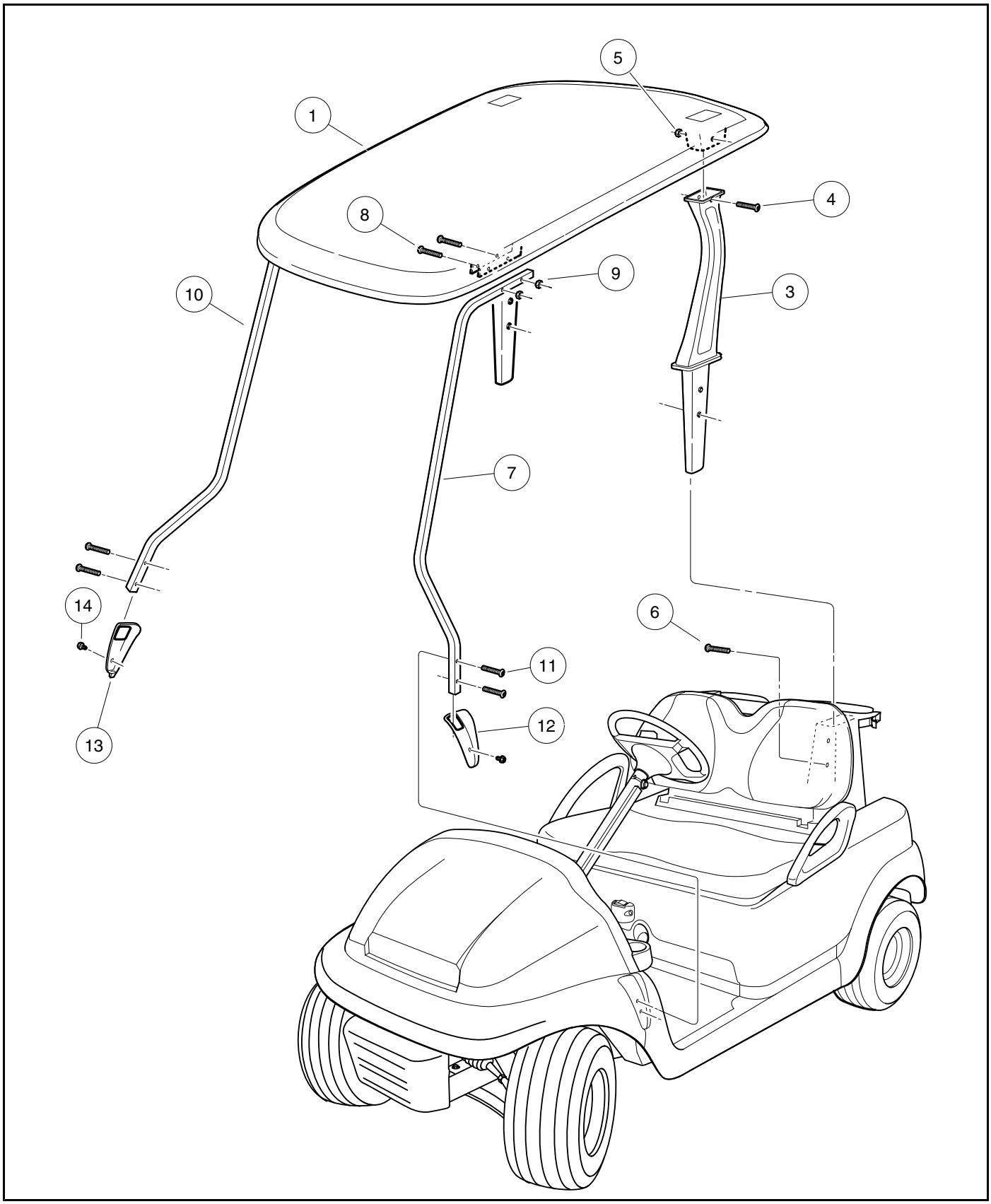

2378

Figure 4-12 Precedent Two-Passenger Canopy

TWO-PASSENGER CANOPY INSTALLATION

1. Install the front canopy supports.
   1.1. Ensure the front supports are properly oriented to the correct side of the vehicle as shown **(Figure 4-12, Page 4-18)**. The lower profile of each support follows the profile of the vehicle. If the supports are placed on the wrong side of the vehicle, they will not follow the vehicle's profile.
   1.2. Align the holes in the lower portion of each front support (7 and 10) with the corresponding holes in the vehicle. Insert two bolts (11) through each front support into the threaded holes in the vehicle. The bolts are color-coded with gold thread lock. Only finger-tighten the bolts at this time.
   1.3. Slide the covers (12 and 13) over the front supports. The covers are marked DRIVER and PASS to identify them as going on the driver side or passenger side respectively. Do not install the screws (14) yet.
2. Insert the two rear canopy supports (3) into the openings on the top of the Structural Accessory Module (SAM).
3. From the inside of the basket, insert bolt (6) through the basket wall and into each support. The bolts are color-coded with blue thread-lock. Finger-tighten the bolts to avoid cross-threading the threads in the supports. **See following CAUTION.**

CAUTION

- **Using tools to thread the bolts could prevent proper feel of the bolt as it captures the female threads in the support. This could result in damage to the components.**

4. Position the canopy on top of the front and rear supports. Ensure that the front supports are properly positioned between the molded tabs on the underside of the canopy and that the molded protrusions at the rear of the canopy extend into the top of the rear supports.
5. Secure the canopy to the front supports with four bolts (8) and lock nuts (9). Use two bolts on each support, inserting the bolts from the inside. Tighten the lock nuts to 50 in-lb (5.6 N·m).
6. Secure the canopy to the rear supports with two bolts (4) and locknuts (5).Tighten the lock nuts to 50 in-lb (5.6 N·m).
7. At the rear supports (3), tighten the two bolts (6) to 88 in-lb (10 N·m).
8. At the front supports (7 and 10), tighten the four bolts (11) to 18.4 ft-lb (25 N·m).
9. Position each cover (12 and 13) over its respective support. A hole in each cover should be aligned with a corresponding hole in the support. Secure the cover to the support with a screw (14). Tighten the screws (14) to 31 in-lb (4.6 N·m).

CANOPY – FOUR-PASSENGER

See General Warnings on page 1-1.

CAUTION

- **To prevent damage to the canopy, do not remove the canopy supports (1 and 6) from the vehicle without first removing the canopy (9) (Figure 4-13, Page 4-21).**

FOUR-PASSENGER CANOPY REMOVAL

1. Remove the two nuts (12), two bolts (11), and spacers (10) from the canopy (9), and each front canopy support (1) **(Figure 4-13, Page 4-21)**.

2. Remove the nuts (14) and bolts (13) from the canopy (9) and the rear support (6).
3. Lift canopy (9) away from front canopy supports (1) and rear support (6).
4. Remove screws (5) securing front canopy support covers to front body.
5. Slide canopy support covers (4) up front canopy supports (1) to gain access to bolts (2).
6. Remove two bolts (2) from each front canopy support (1) and remove the canopy supports from the vehicle.
7. Remove two bolts (8) from the rear support (3) and remove rear support from vehicle.

FOUR-PASSENGER CANOPY INSTALLATION

1. Install the front canopy supports.
   1.1. Ensure the front supports are properly oriented to the correct side of the vehicle as shown **(Figure 4-13, Page 4-21)**. The lower profile of each support follows the profile of the vehicle. If the supports are placed on the wrong side of the vehicle, they will not follow the vehicle's profile.
   1.2. Align the holes in the lower portion of each front support (1) with the corresponding holes in the vehicle. Insert two bolts (2) through each front support into the threaded holes in the vehicle. The bolts are color-coded with gold thread lock. Only finger-tighten the bolts at this time.
   1.3. Slide the front support covers (4) over the front supports (1). The covers are marked DRIVER and PASS to identify them as going on the driver side or passenger side respectively. Do not install the screws (5) yet.
2. Remove the two bolts that secure the hip restraint (15) to the seat supports (7).
3. Align the rear canopy support (6) with the top of the seat supports (7) and secure with two bolts (8) as shown. Tighten the hardware to 124 in-lb (14 N·m).
4. Secure the front of the canopy (9) to the front supports (1) with four spacers (10), bolts (11), and cap-nuts (12). Tighten the hardware to 10 ft-lb (13.6 N·m).
5. Secure the rear of the canopy (9) to the rear canopy support (6) with four bolts (13) and cap-nuts (14). Tighten the hardware to 10 ft-lb (13.6 N·m).
6. Tighten the four bolts (2) installed in step 1.2 to 18 ft-lb (25 N·m).
7. Secure each front support cover (4) with one screw (5). Tighten the hardware to 31 in-lb (4.6 N·m).

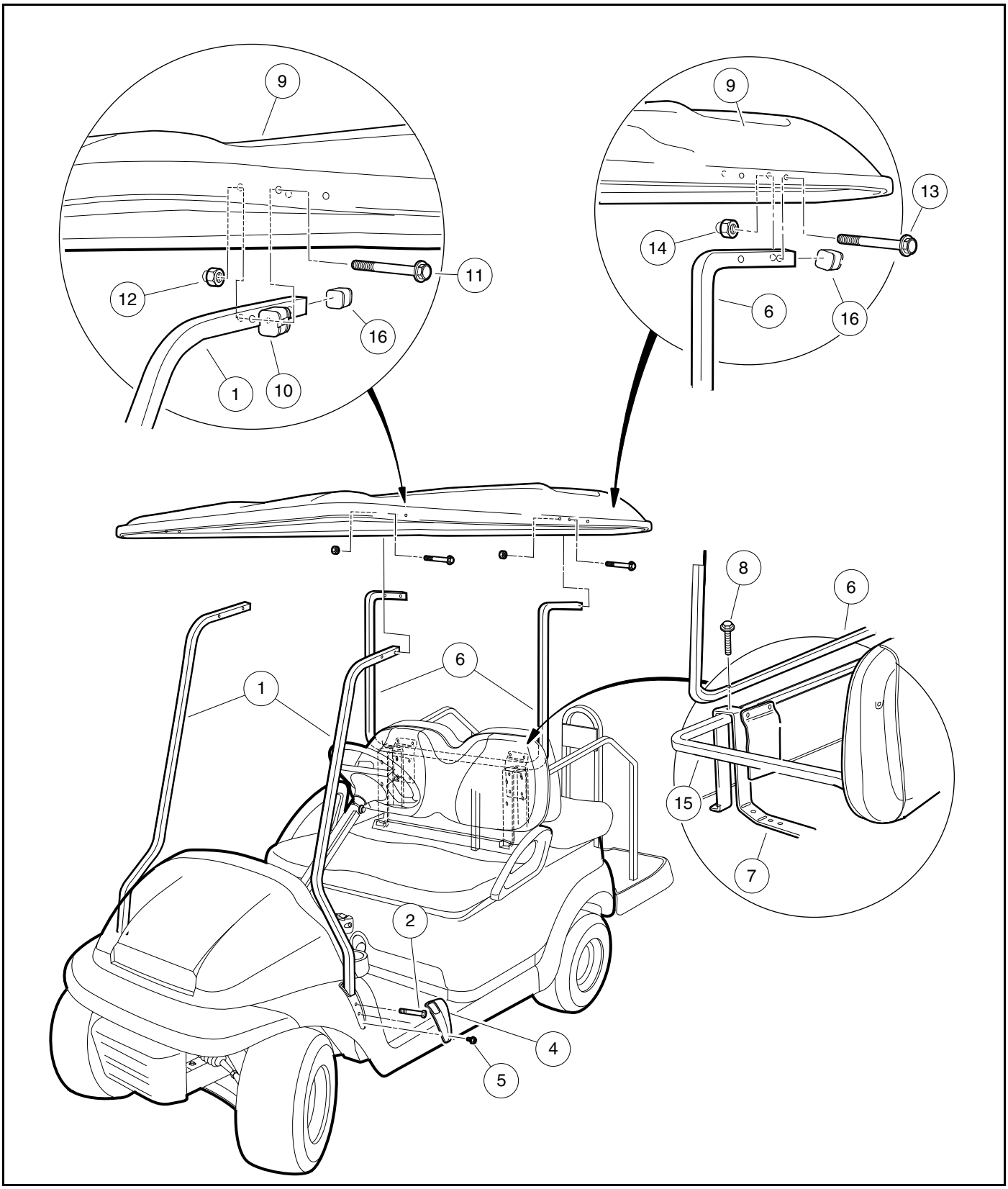

628

Figure 4-13 Precedent Four-Passenger Canopy

CANOPY (MONSOON VERSION) – FOUR-PASSENGER

See General Warnings on page 1-1.

CAUTION

- **To prevent damage to the canopy, do not remove the canopy supports (1, 2, 8 and 9) from the vehicle without first removing the canopy (13) (Figure 4-16, Page 4-25).**

MONSOON CANOPY REMOVAL

1. Remove the two nuts (17), two washers (16), and two bolts (15) from the canopy (13) at each front canopy support (8 and 9) **(Figure 4-16, Page 4-25)**.
2. Remove the four bolts (18) from the canopy (13) at each rear support (1 and 2).
3. Lift canopy (13) off the canopy supports.
4. Remove screws (12) securing front canopy support covers (11) to front body.
5. Slide canopy support covers (11) up front canopy supports (8 and 9) to gain access to bolts (10).
6. Remove two bolts (10) from each front canopy support (8 and 9) and remove the canopy supports from the vehicle.
7. Remove the four nuts (7), eight washers (6), and four bolts (5) securing each rear canopy support (1 and 2) and remove the canopy supports from the vehicle **(Figure 4-14, Page 4-23)**.

MONSOON CANOPY INSTALLATION

1. Secure the rear canopy supports.
   1.1. Position each rear canopy support (1 and 2) to the side of the seat support assembly (3) as shown **(Figure 4-14)**. Make sure the bottom of the strut is in the hole (4) in the rear body to allow for water drainage.
   1.2. Secure each rear canopy support (1 and 2) to the seat support assembly with four 1/4-20 x 1- hex head bolts (5), eight 1/4-inch flat washers (6) and four 1/4-20 nylon lock nuts (7). Tighten hardware to 80 in-lb (9 N·m).

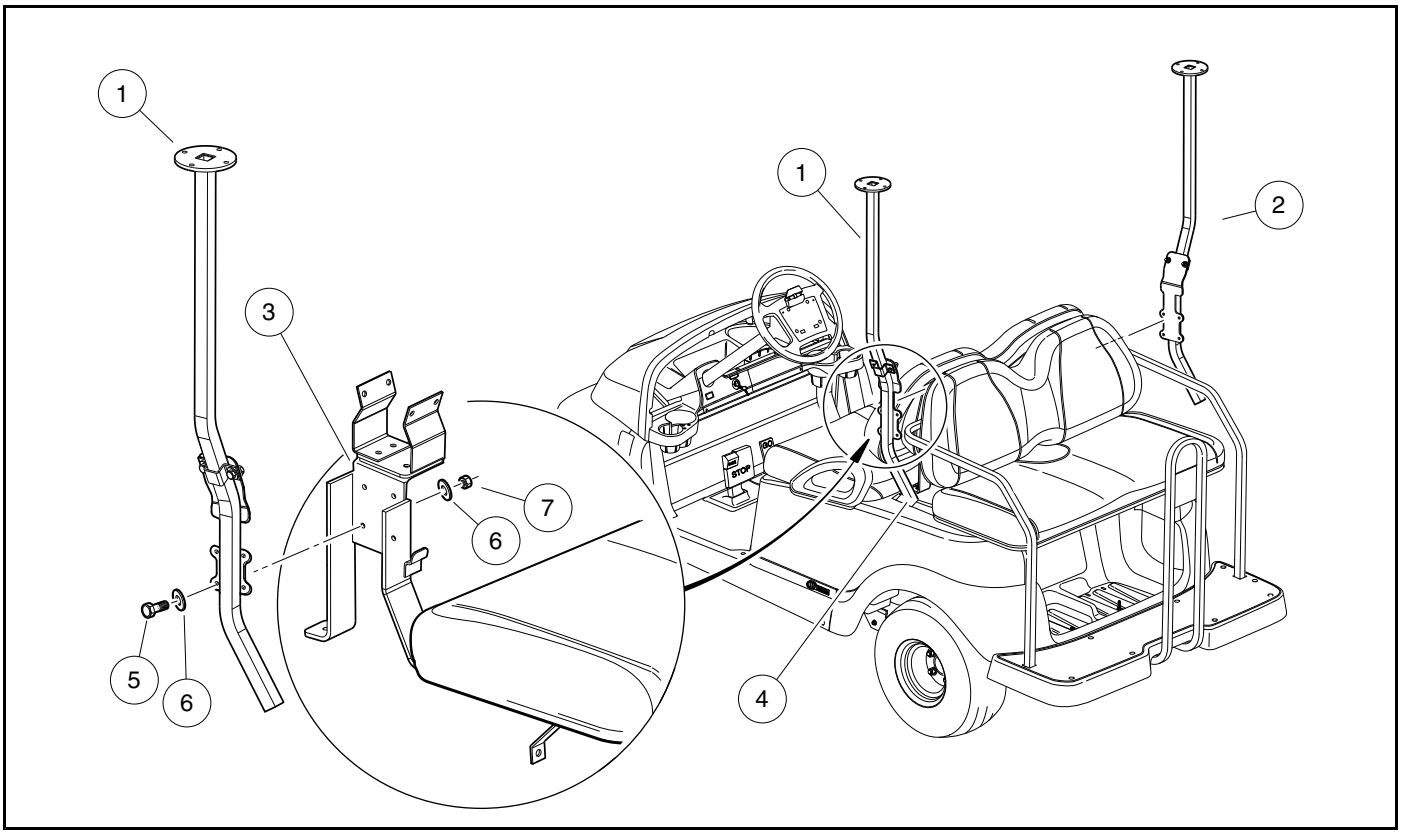

K-00538.eps

Figure 4-14 Secure Rear Supports to Seat Support Bracket

2. Attach the front canopy supports.
   2.1. Ensure the front supports are properly oriented to the correct side of the vehicle as shown **(Figure 4-15)**. The lower profile of each support follows the profile of the vehicle. If the supports are placed on the wrong side of the vehicle, they will not follow the vehicle's profile.
   2.2. Align the holes in the lower portion of each front support (8 and 9) with the corresponding holes in the vehicle **(Figure 4-16)**. Insert two M8-1.25 x 65 torx button-head bolts (10) through each front support into the threaded holes in the vehicle. The bolts are color-coded with gold thread lock. Only finger-tighten the bolts at this time.
   2.3. Slide the front support covers (11) over the front supports (8 and 9). The covers are marked DRIVER and PASS to identify them as going on the driver side or passenger side respectively **(Figure 4-16)**. Do not install the M6 hex-head screws (12) yet.

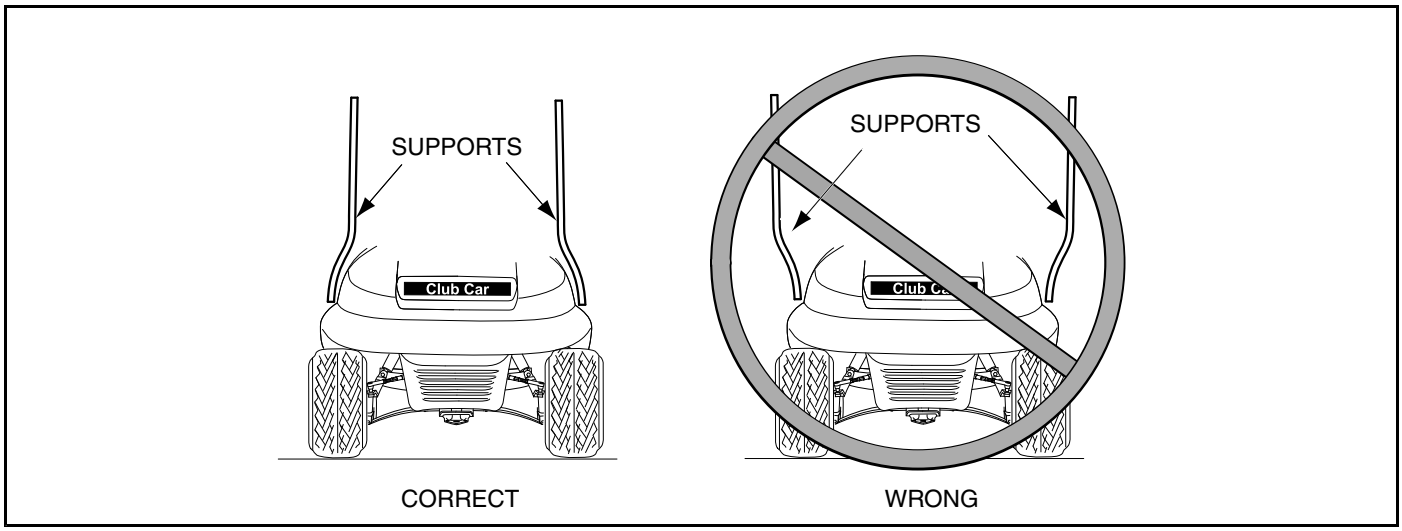

K-00504.eps

Figure 4-15 Properly Orient the Front Supports

3. With the aid of an assistant, position the canopy (13) to the top of the front supports (8 and 9) and rear supports (1 and 2).
4. Secure the front canopy brackets (under the canopy) (14) to the front supports (8 and 9) with four 1/4-20 x 1-1/2 hex head bolts (15), eight 1/4-inch flat washers (16) and four 1/4-20 nylon lock nuts (17). Tighten the hardware to 80 in-lb (9 N·m).
5. Secure the rear of the canopy (13) to each rear canopy support (1 and 2) with four M6-1.0 x 25 flanged head bolts (18). Tighten the hardware to 80 in-lb (9 N·m).
6. At the bottom of the front supports (8 and 9), tighten the four M8-1.25 x 65 torx button-head bolts (10) to 18 ft-lb (25 N·m).
7. Secure each front support cover (11) with one M6 hex-head screw (12). Tighten the hardware to 31 in-lb (4.6 N·m).
8. Secure the tube plugs (19) into the end of each canopy support (1 and 14).

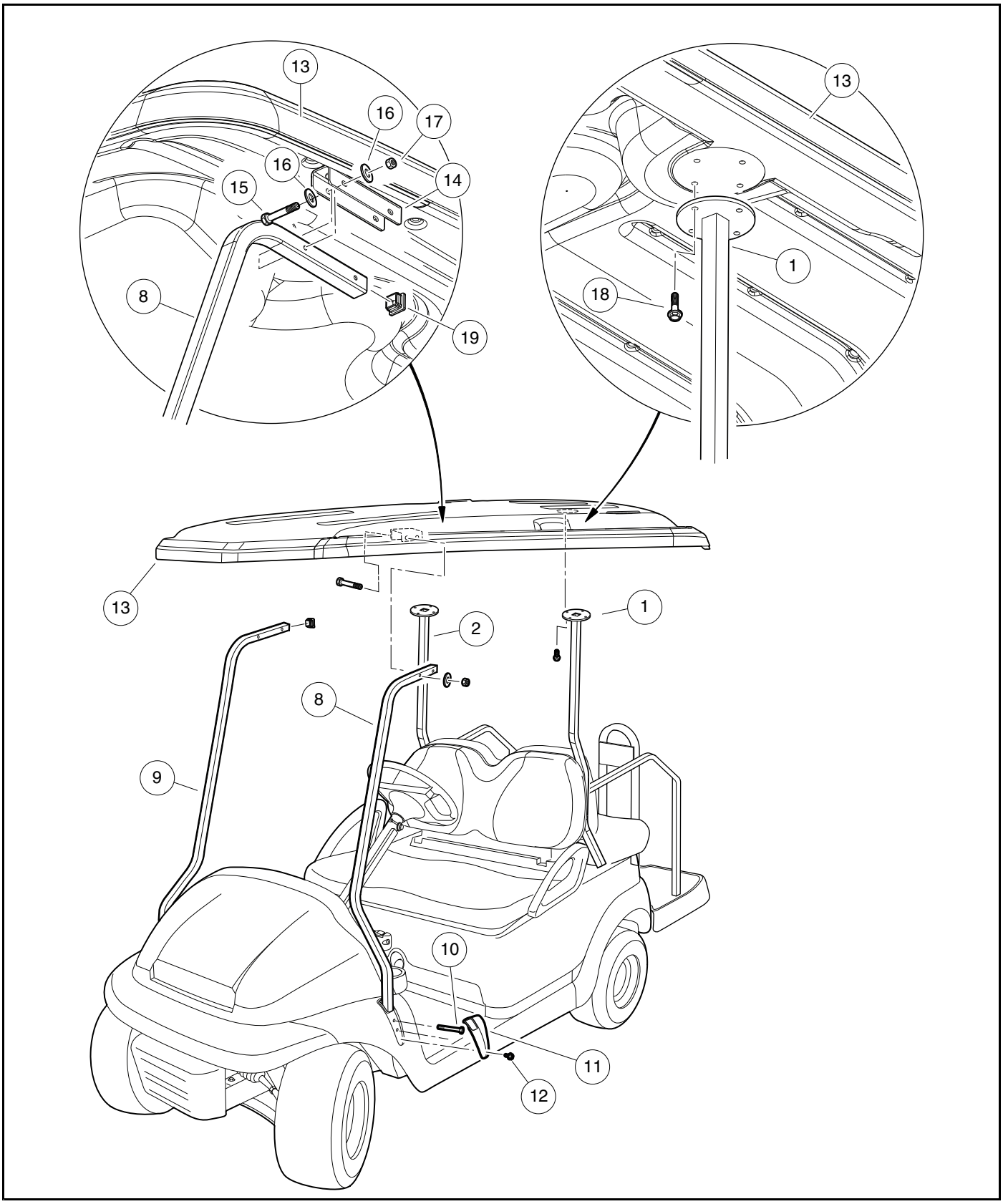

K-00537.eps

Figure 4-16 Secure Canopy

⚠ DANGER

- **See General Warnings on page 1-1.**

⚠ WARNING

- **See General Warnings on page 1-1.**

PEDAL GROUP – GEN. I

See General Warnings on page 1-1.

PEDAL GROUP REMOVAL

1. Disconnect battery and spark plug wire(s). **See Disconnecting the Battery – Gasoline Vehicles on page 1-3.**
2. Remove screws (1). Pull floor mat retainer (3) away from the vehicle **(Figure 5-1, Page 5-1)**.
3. Pull floor mat (2) over the pedal group to gain access to the pedal group hardware.
4. Lift off cover plate (7) **(Figure 5-2, Page 5-2)**.
5. Loosen jam nuts (4 and 5) on each side of turnbuckle (6).

NOTE: *Nut (4) has a left-hand thread.*

6. Loosen turnbuckle (6) until the threaded rod (13) from the pedal group is free of the turnbuckle **(Figure 5-2, Page 5-2)**.

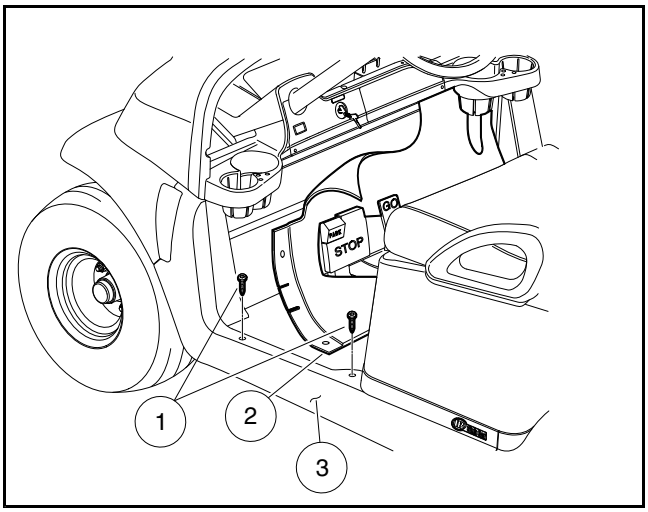

629

Figure 5-1 Pedal Group Access

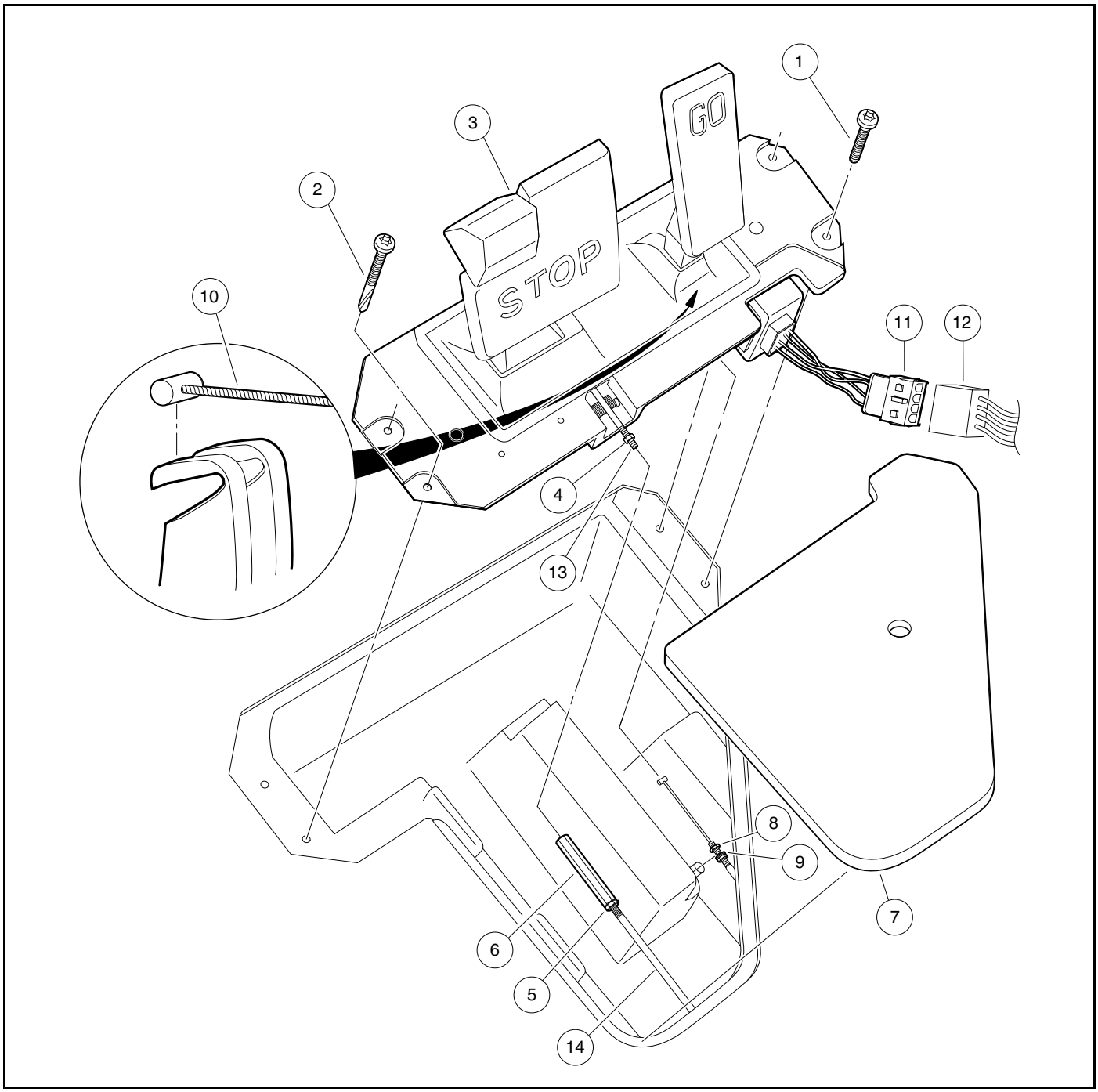

630

Figure 5-2 Pedal Group – Gen. I

7. Loosen two nuts (8 and 9) on the accelerator cable and lift the cable from its mounting bracket.
8. Remove two screws (2) on the driver side of the pedal group and two screws (1) on the passenger side of the pedal group.
9. Slightly lift pedal group from the vehicle to gain access to the connections (11 and 12) to the GCOR on the passenger side of the pedal group.
10. Disconnect the electrical connector at the GCOR.
11. Release the end of the accelerator cable (10) from the pedal group.

12. Remove two screws (1) to separate the GCOR from the pedal group **(Figure 5-3, Page 5-3)**.

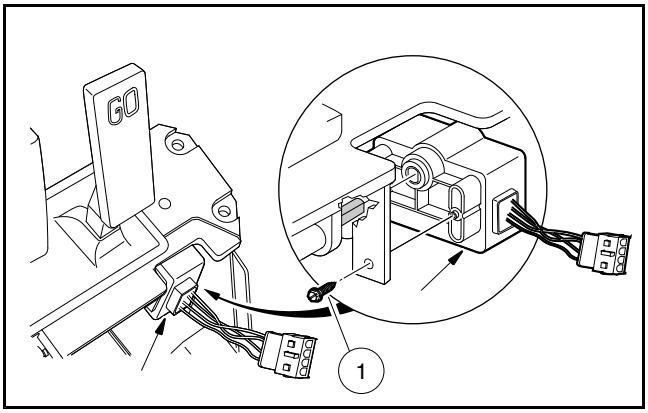

631

Figure 5-3 GCOR Removal

GCOR

The pedal group for the Precedent gasoline vehicle includes a Gasoline Controller Output Regulator (GCOR) mounted on the side of the pedal group. The GCOR houses two limit switches: the kill limit switch and the accelerator pedal limit switch. The two switches are actuated by motion of the GO pedal.

DEBRIS SHIELDS

Debris shields on the top face of the pedal group prevent excessive debris from contacting the moving parts of the pedal group. Both shields (3 and 4) are held in place with screws (1) and washers (2) **(Figure 5-4, Page 5-5)**. When shields are replaced, tighten screws (1) to 53 in-lb (6 N·m).

BRAKE RETURN SPRING

CAUTION

- **Spring is under tension. Use caution when working with springs.**

The brake return spring (5) provides the pressure needed to return the brake pedal to its upright position **(Figure 5-4, Page 5-5)**. One end of the spring attaches to a hook on pedal (11) and the other end attaches to pedal base (12).

PAWL ASSEMBLY

The pawl assembly (6) serves to lock the brakes when the PARK pedal is pressed. The pawl assembly also releases the brakes when either the STOP or GO pedal is pressed **(Figure 5-4, Page 5-5)**. The pawl assembly is serviced as a unit. The replacement unit includes two snap rings (7), pin (8), spring (9), and pawl unit (6). When replacing the unit, ensure spring (9) is properly positioned to be held in place when the pin (8) is installed. Secure the pin with two snap rings (7).

ACCELERATOR RETURN SPRING

The accelerator return spring assembly (10) consists of a spring and a T-shaped bar secured by a crosspin **(Figure 5-4, Page 5-5)**. The assembly is replaced as a unit. The replacement unit includes a pin that keeps the spring compressed so it can be installed in the pedal group. Replace the assembly as follows:

CAUTION

- **Spring is under tension. Use caution when working with springs.**

1. With the pedal group removed from the vehicle, remove the debris shield, the clip (13), and then the accelerator return spring assembly.
2. Grasp the new accelerator return spring assembly and squeeze the two wire ties to the middle of the assembly, then cut the rubber band.
3. Insert the crosspin (3) through the rod on top of the accelerator return spring assembly **(Figure 5-5, Page 5-6)**.
4. Position the accelerator return spring assembly in the pedal group with the lower crosspin of the assembly position in the pedal group **(Figure 5-5, Page 5-6)**.
5. Position the upper corsspin in the tab on the pedal group **(Figure 5-6, Page 5-6)**.
6. Press the accelerator pedal forward to relieve the spring tension of the assembly, then cut the two wire ties **(Figure 5-7, Page 5-6)**.
7. Secure the clip (13) onto the bottom crosspin by gently tapping it with the head of a screwdriver until securely in position **(Figure 5-5, Page 5-6)**.
8. Secure the debris shield. **See following NOTE.**

NOTE: *Make sure the screw closest to the brake pedal is installed with two flat washers. The remaining two screws get one flat washer a piece.*

9. Tighten the screws to 23 in-lb (2.6 Nm).
10. Lubricate the springs and all moving parts of the pedal group with TEFLON spray lubricant.

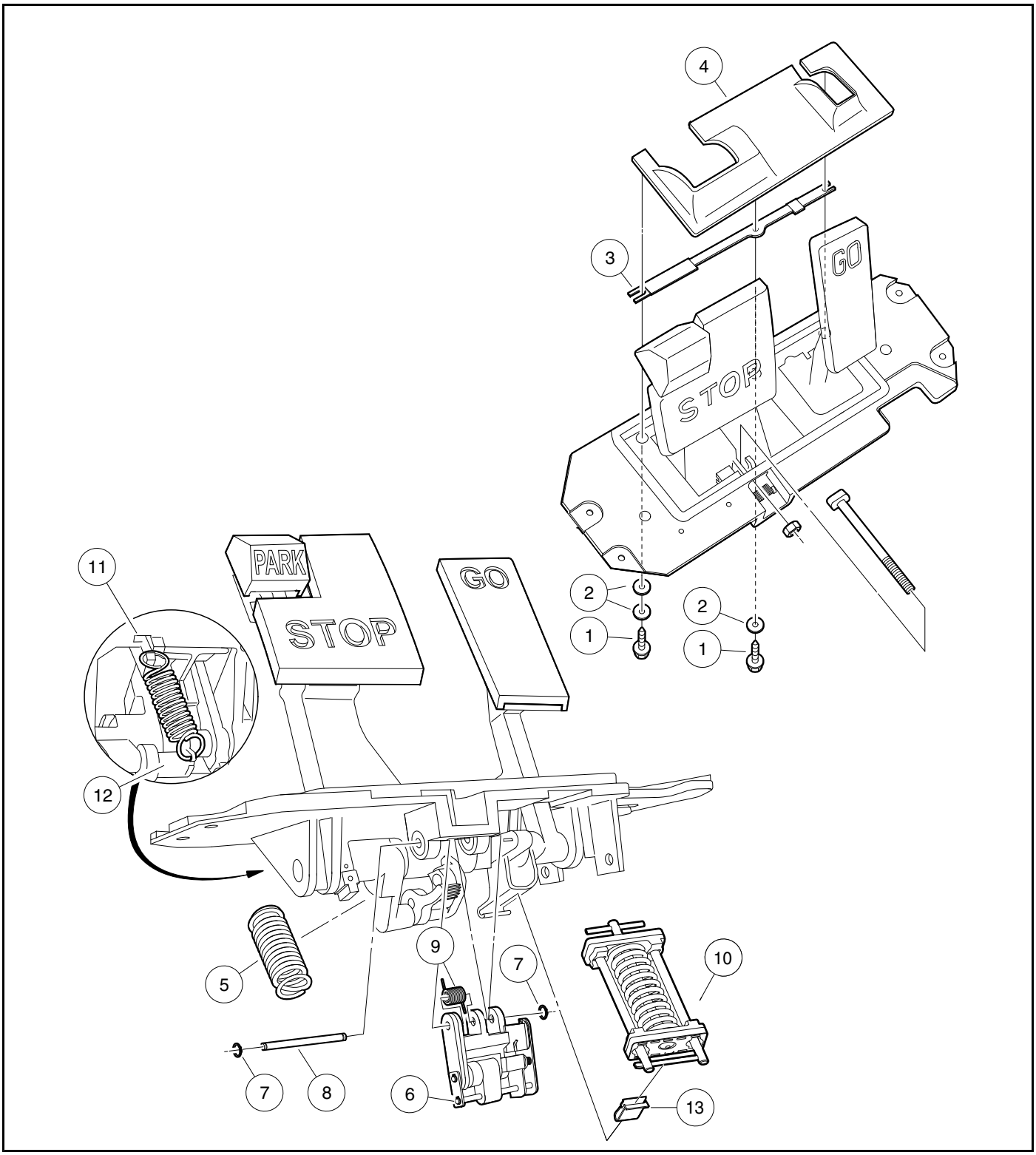

632

Figure 5-4 Pedal Group

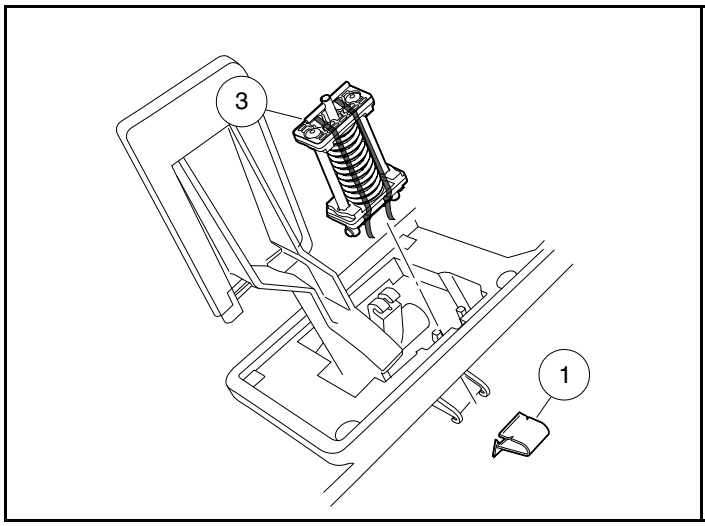

633
Figure 5-5 Accelerator Spring Clip

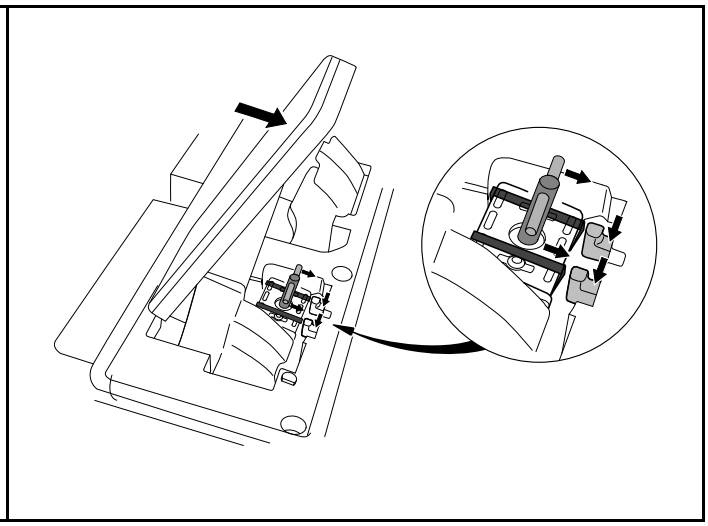

634
Figure 5-6 Accelerator Spring Upper Crosspin

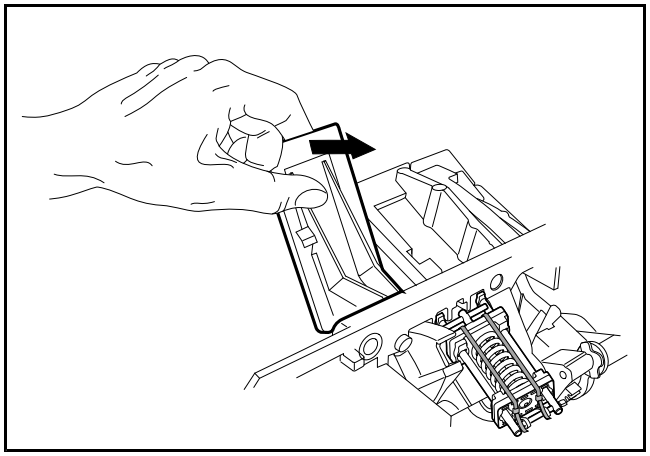

635
Figure 5-7 Accelerator Spring Pin Removal

PEDAL GROUP INSTALLATION

1. Connect the end of the accelerator cable to the pedal group **(Figure 5-2, Page 5-2)**. **See following CAUTION.**

CAUTION

- **Make sure the accelerator cable is properly seated to the pedal group.**

2. Connect the GCOR connector (11) to the wire harness (12). It will only fit together in one orientation.
3. **For vehicles with brake lights:** Connect the wire harness to the brake switch.
4. Position the pedal group in the vehicle and secure it with two screws (2) on the driver side and then two screws (1) on the passenger side. Tighten the driver side screws (2) to 12 ft-lb (16.3 Nm). Tighten the passenger side screws to 5 ft-lb (6.8 (Nm).
5. Remove the turnbuckle (6) and apply Loctite 242 to the threaded ends of both the rod from the pedal group (13) and the brake actuator rod (14). Connect the rods using the turnbuckle (6). Ensure the ends of the brake cables do not slip out of the brake equalizer during this procedure.
6. Adjust brake cable equalizer. **See Brake Cable Equalizer Adjustment on page 6-10.**
7. Place floor cover plate (7) over the floor opening.

8. Reinstall the floor mat (2) over the pedal group. Make sure tabs on floor mat sides are beneath the sill (3). Tighten screws (1) to 53 in-lb (6 N·m) **(Figure 5-1, Page 5-1)**.
9. Connect battery and spark plug wire(s). **See Connecting the Battery – Gasoline Vehicles on page 1-3.**

PEDAL GROUP – GEN. II

See General Warnings on page 1-1.

PEDAL GROUP REMOVAL

1. Disconnect battery and spark plug wire(s). **See Disconnecting the Battery – Gasoline Vehicles on page 1-3.**
2. Remove screws (1). Pull floor mat retainer (3) away from the vehicle **(Figure 5-8, Page 5-7)**.
3. Pull floor mat (2) over the pedal group to gain access to the pedal group hardware.
4. Remove fastener (10) and lift off cover plate (7) **(Figure 5-9, Page 5-8)**.
5. Loosen jam nuts (4 and 5) on each side of turnbuckle (6).

NOTE: *Nut (4) has a left-hand thread.*

6. Loosen turnbuckle (6) until the threaded rod (8) from the pedal group (11) is free of the turnbuckle **(Figure 5-9, Page 5-8)**.

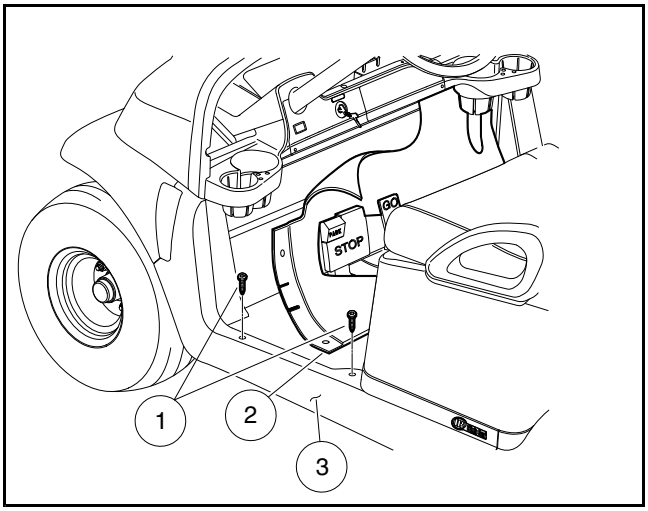

629

Figure 5-8 Pedal Group Access

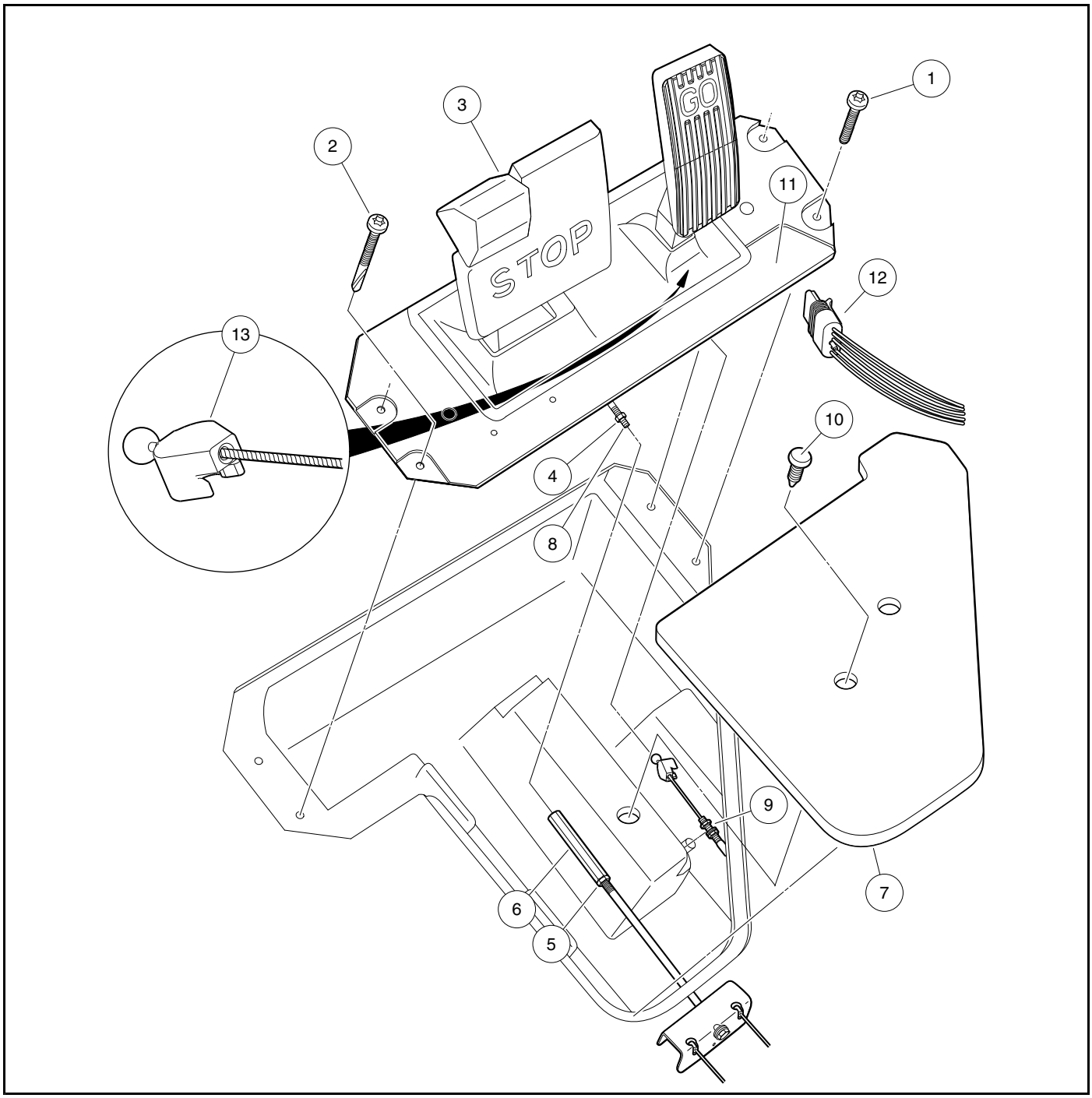

Figure 5-9 Pedal Group – Gen. II

7. Loosen two nuts (9) on the accelerator cable and lift the cable from its mounting bracket.
8. Remove two screws (2) on the driver side of the pedal group and two screws (1) on the passenger side of the pedal group.
9. Disconnect six-pin connector (12) from throttle position sensor.
10. Release the end of the accelerator cable (13) from the pedal group.
11. Lift pedal group from vehicle.

THROTTLE POSITION SENSOR

The pedal group for the Precedent vehicle includes a throttle position sensor mounted on the side of the accelerator pedal assembly. The throttle position sensor detects the position of the accelerator pedal and sends a voltage to the solenoid and forward/reverse limit switches. The throttle position sensor itself is not intended to be replaced. If sensor is determined to need replacing through test procedures found in this manual, the accelerator pedal assembly must be replaced. **See Accelerator Pedal Removal on page 5-9.**

DEBRIS SHIELDS

Debris shields on the top face of the pedal group prevent excessive debris from contacting the moving parts of the pedal group. Both shields (4 and 5) are held in place by tabs that snap into the pedal group mounting plate **(Figure 5-10, Page 5-10)**.

ACCELERATOR PEDAL REMOVAL

1. Remove pedal group from vehicle. **See Pedal Group Removal on page 5-7.**
2. Remove debris shields (4 and 5) **(Figure 5-10, Page 5-10)**.
3. Remove four screws (13) securing accelerator pedal assembly (9) to pedal group mounting plate and pull accelerator pedal assembly through bottom of pedal group mounting plate.

ACCELERATOR PEDAL INSTALLATION

1. Insert accelerator pedal assembly (9) through bottom of pedal group mounting plate and secure with four screws (13) **(Figure 5-10, Page 5-10)**.
2. Tighten screws (13) to 38 in-lb (4.3 N·m)
3. Install debris shields (4 and 5).
4. Install pedal group in vehicle. **See Pedal Group Installation on page 5-11.**

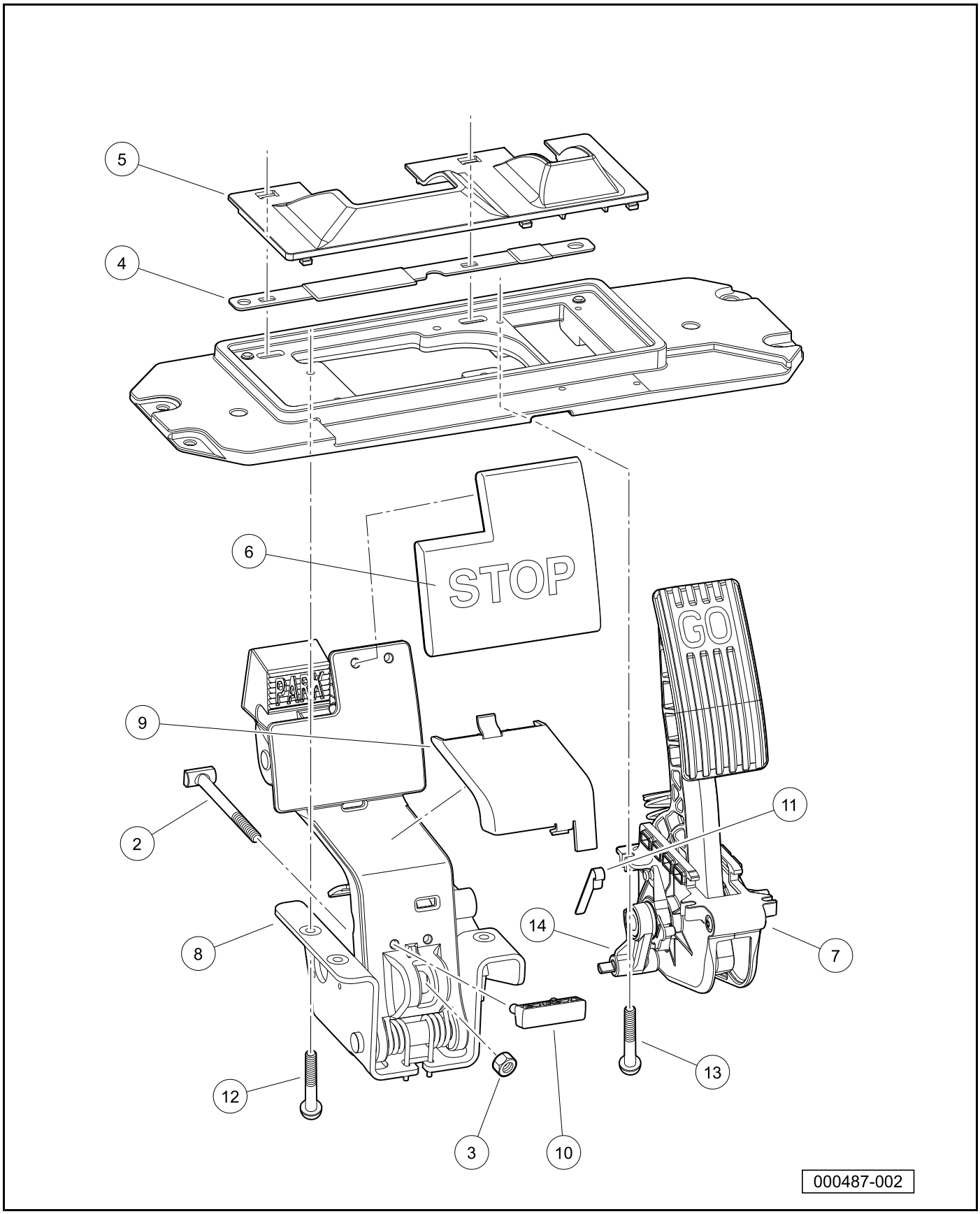

Figure 5-10 Accelerator Pedal Assembly and Brake Pedal Assembly

BRAKE PEDAL REMOVAL

1. Remove pedal group from vehicle. **See Pedal Group Removal on page 5-7.**
2. Remove debris shields (4 and 5) **(Figure 5-10, Page 5-10)**.
3. Remove four screws (12) securing brake pedal assembly (10) to pedal group mounting plate and pull brake pedal assembly through bottom of pedal group mounting plate.

BRAKE PEDAL INSTALLATION

1. Insert brake pedal assembly (10) through bottom of pedal group mounting plate and secure with four screws (12) **(Figure 5-10, Page 5-10)**.
2. Tighten screws (12) to 100 in-lb (11.3 N·m)
3. Install debris shields (4 and 5).
4. Install pedal group in vehicle. **See Pedal Group Installation on page 5-11.**

PEDAL GROUP INSTALLATION

1. Connect the end of the accelerator cable to the pedal group **(Figure 5-9, Page 5-8)**. **See following CAUTION.**

CAUTION

- **Make sure the accelerator cable is properly seated to the pedal group.**

2. Connect the wire harness (12) to the throttle position sensor **(Figure 5-9, Page 5-8)**.
3. Position the pedal group in vehicle and secure with two screws (2) on the driver side and two screws (1) on the passenger side. Tighten driver side screws (2) to 97 in-lb (11 N·m). Tighten passenger side screws (1) to 18 in-lb (2 N·m).
4. Remove the turnbuckle (6) and apply Loctite 242 to the threaded ends of both the rod from the pedal group (8) and the brake actuator rod (9). Connect the rods using the turnbuckle (6). Ensure the ends of the brake cables do not slip out of the brake equalizer during this procedure.
5. Adjust the brake cable equalizer tension. **See Brake Cable Equalizer Adjustment on page 6-10.**
6. Place floor cover plate (7) over the floor opening and secure with fastener (10) **(Figure 5-9, Page 5-8)**.
7. Install the floor mat (2) over the pedal group. Make sure tabs on floor mat sides are beneath the sill (3). Tighten screws (1) to 53 in-lb (6 N·m) **(Figure 5-8, Page 5-7)**.
8. Connect battery and spark plug wire(s). **See Connecting the Battery – Gasoline Vehicles on page 1-3.**

⚠ DANGER

- **See General Warnings on page 1-1.**

⚠ WARNING

- **See General Warnings on page 1-1.**

Asbestos Dust Warning

- **Some aftermarket brake shoes contain asbestos fiber, and asbestos dust is created when these brake mechanisms are handled. Wear approved eye and respiratory protection when disassembling and cleaning brake mechanisms. Inhalation of asbestos could result in severe personal injury or death. Do not use compressed air or aerosol sprays to clean the brake mechanism. Clean brake mechanism using the negative pressure enclosure/hepa vacuum system or low pressure/wet cleaning method per OSHA/29 CFR - 1910.1001.**

GENERAL INFORMATION

Precedent Golf Cars are equipped with self-adjusting, mechanically-expanding shoe drum brakes on each rear wheel.

BRAKE SHOE REMOVAL

See General Warnings on page 1-1. See also Asbestos Dust Warning on page 6-1.

1. Disconnect the battery cables and discharge the controller as instructed. **See WARNINGS "To avoid unintentionally starting..." and "After disconnecting the batteries, wait 90 seconds..." in General Warnings on page 1-1.**
2. Place chocks at the front wheels. Loosen, but do not remove, lug nuts on rear wheels and lift the rear of the vehicle with a chain hoist or floor jack. Place jack stands under the axle tubes to support the vehicle. **See WARNING "Lift only one end..." in General Warnings on page 1-1.**
3. Gain access to the pedal group by removing the floor mat and access panel. **See Pedal Group Removal on page 5-7.**
4. Loosen the two jam nuts (1 and 3) on either side of turnbuckle (2) **(Figure 6-1, Page 6-2)**. Note that the forward jam nut (1) is a left-hand thread. Thread each nut approximately 1/2 inch (12.7 mm) away from the turnbuckle.
5. Loosen turnbuckle (2) to release tension on the equalizer bracket (4) that pulls on the heads of the brake cables.
6. Remove the rear wheels and then the brake drums. If the brake drums were easily removed, proceed to step 8.

⚠ CAUTION

- **Worn or damaged brake drums cannot be machined to refinish them. Replace as necessary.**

NOTE: *When servicing vehicles with severely worn brake shoes and when the drums cannot be removed by normal methods, proceed to step 7 to minimize damage to the brake cluster and brake components.*

7. Remove brake drums and badly worn brake shoes.
   7.1. On the back of each brake cluster assembly, locate the heads of two brake shoe retainer pins. It may be necessary to remove sealant material around the head of each pin.

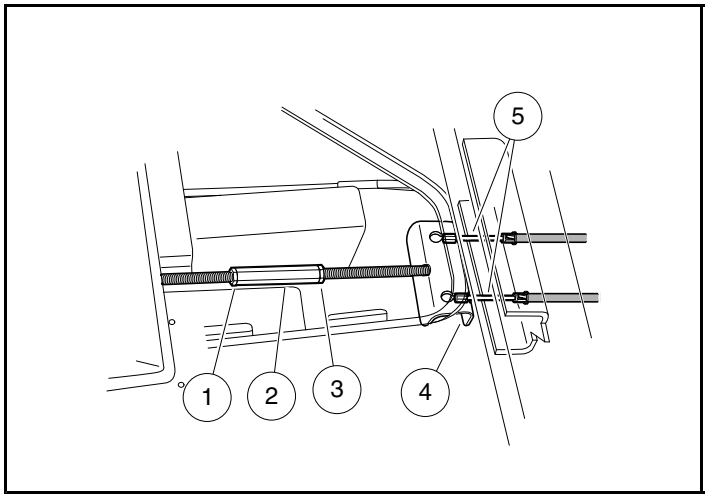

636
Figure 6-1 Loosen Turnbuckle

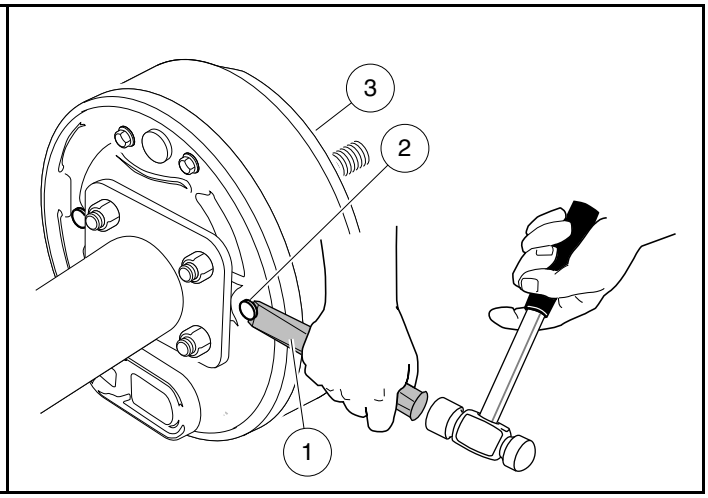

1400-18100-10220
Figure 6-2 Shoe Retainer Pins

   7.2. Insert a 1/2 inch x 5/8 inch cold chisel (1) under the head (2) of each pin and shear them off as illustrated **(Figure 6-2, Page 6-2)**. This will release the shoes from the backing plate, allowing them to pivot away from the inside of the brake drum (3), which should then allow the brake drum to be pulled free. After completing step 8, skip step 9.

NOTE: *Although step 8 allows easier access to the brake shoes, it is not imperative to do so in order to remove the brake shoes.*

8. Remove the axle.
   8.1. Using 90° snap ring pliers (P/N 1012560), remove the axle retaining ring (1) **(Figure 6-3, Page 6-2)**.
   8.2. Pull the axle shaft (2) from the axle tube **(Figure 6-3, Page 6-2)**.

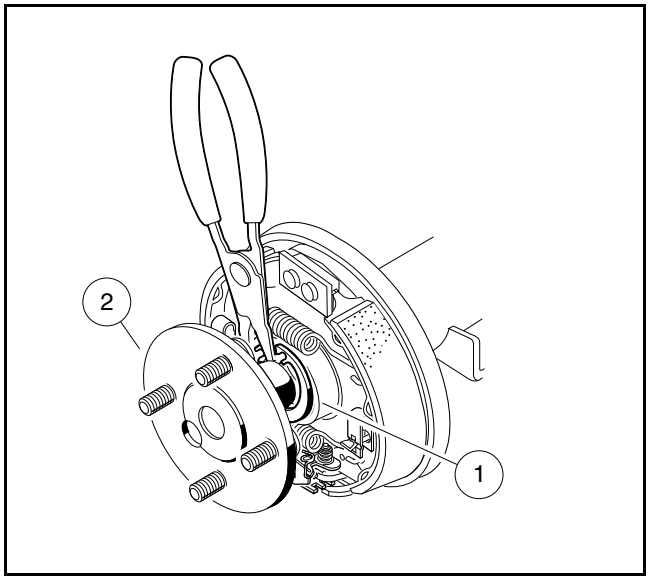

2400-23600-10221
Figure 6-3 Remove Axle Retaining Ring

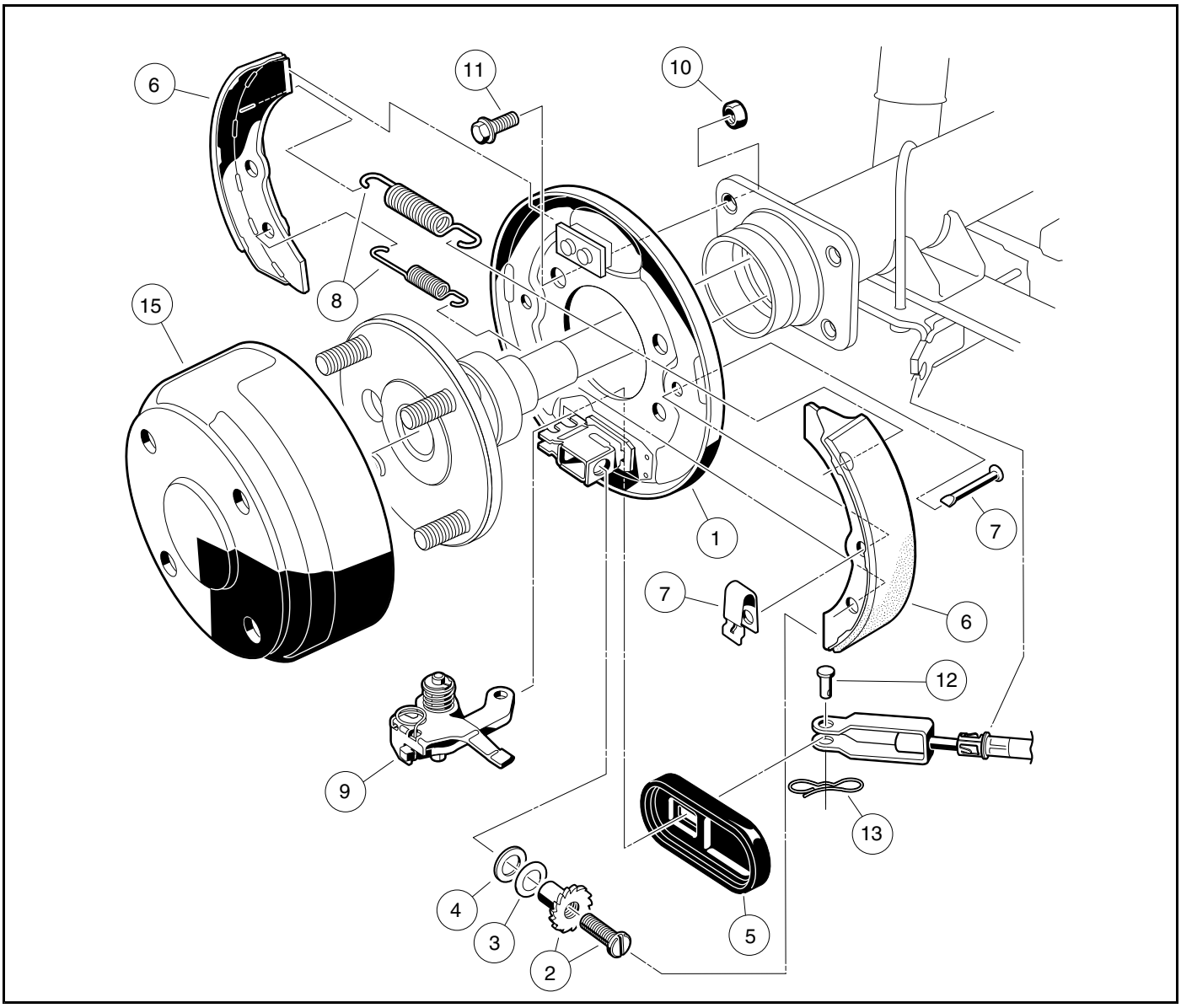

637

Figure 6-4 Self-adjusting Wheel Brake Assembly

9. Using needle nose pliers, turn the clip retainer pin (1) 90° to remove the shoe retainer clip (2) **(Figure 6-5, Page 6-4)**.

⚠ CAUTION

- **The brake shoes are under pressure and can release suddenly when brake shoe retainers are removed.**

10. Grasp both brake shoes and pull them, together with the springs, out of the brake assembly as shown **(Figure 6-6, Page 6-4)**.
11. Remove adjuster wheel (1) with two washers (2 and 3) from the backing plate **(Figure 6-7, Page 6-4)**.

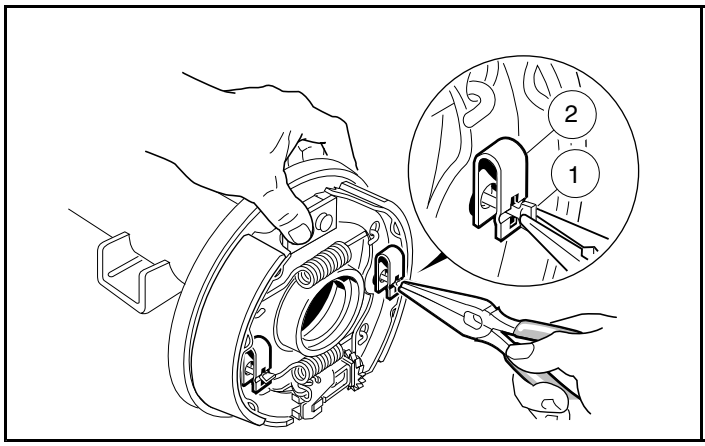

1400-18100-10222
Figure 6-5 Remove Shoe Retainer Clip

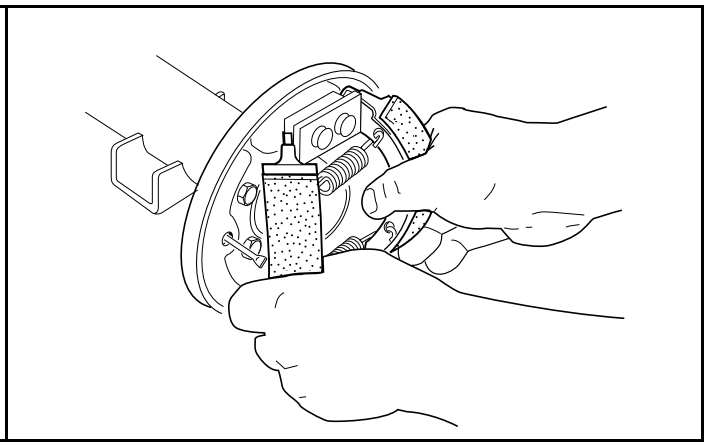

1400-17700-10225
Figure 6-6 Remove Brake Shoes

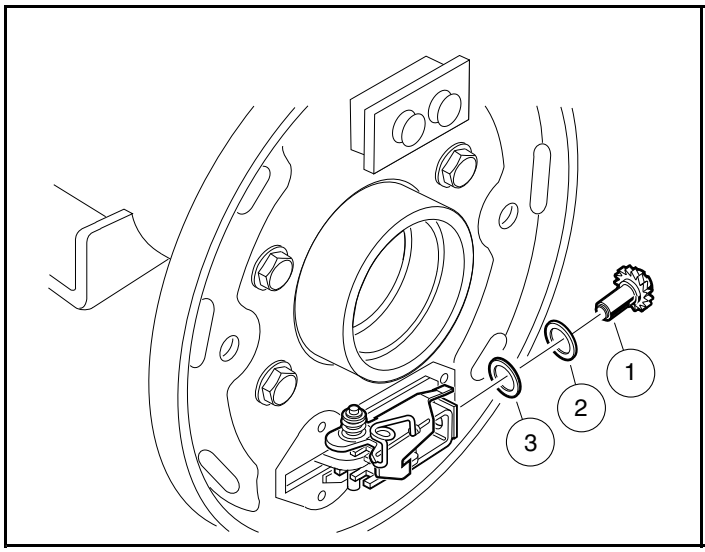

638
Figure 6-7 Remove Adjuster Wheel

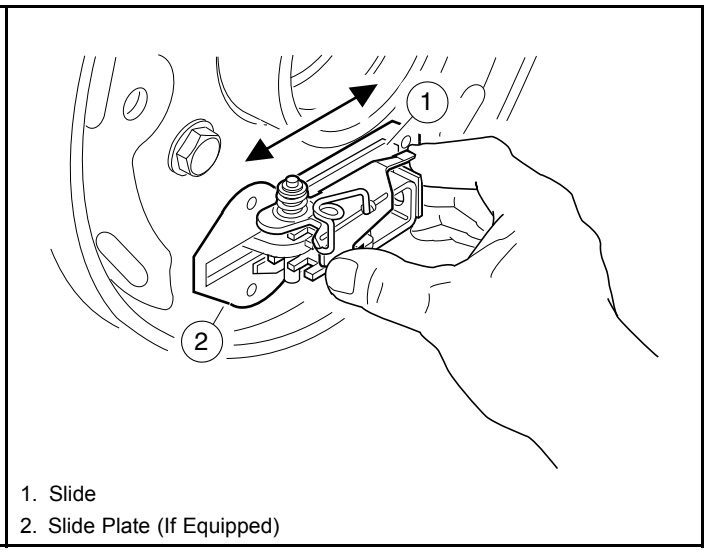

639
Figure 6-8 Lubricate Slide

BRAKE ASSEMBLY CLEANING

See General Warnings on page 1-1. See also Asbestos Dust Warning on page 6-1.

NOTE: *Later model vehicles are no longer equipped with the slide plate.*

1. Carefully clean the brake backing plate and all of its mechanical components.
2. Remove the rubber boot from backing plate and wipe with a clean damp cloth.
3. For vehicles equipped **with** a slide plate (2) **(Figure 6-8, Page 6-4)**, lubricate the slide plate with dry moly lubricant (P/N 1012151). For vehicles equipped **without** a slide plate (2), lubricate the backing plate, where the slide operates, with dry moly lubricant (P/N 1012151).
4. Lubricate the slide (1) with dry moly lubricant (P/N 1012151). After lubricating, work slide back and forth against backing plate to ensure that it slides smoothly and easily. Install rubber boot onto backing plate.

⚠ WARNING

- **Apply grease carefully when performing the following steps. Do not allow any grease to get onto the friction surfaces of the brake shoe pads or the brake drum. Failure to heed this warning could cause diminished brake performance, possibly resulting in property damage or severe personal injury.**

5. Use a small brush to carefully apply a light coat of white lithium NLGI #2 grease (Dow Corning® BR2-Plus or equivalent) on each of the six raised bosses on the brake backing plate **(Figure 6-9, Page 6-5)**. **See preceding WARNING.**
6. Use a small brush to carefully apply a light coat of white lithium NLGI #2 grease (Dow Corning BR2-Plus or equivalent) to each end of both brake shoes and into the slots in the brake shoe mounting block as shown **(Figure 6-10, Page 6-5)**. **See preceding WARNING.**

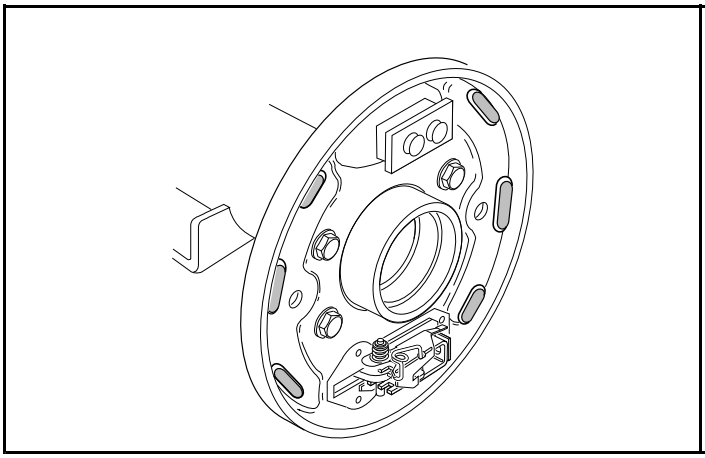

640
Figure 6-9 Apply Grease On Bosses

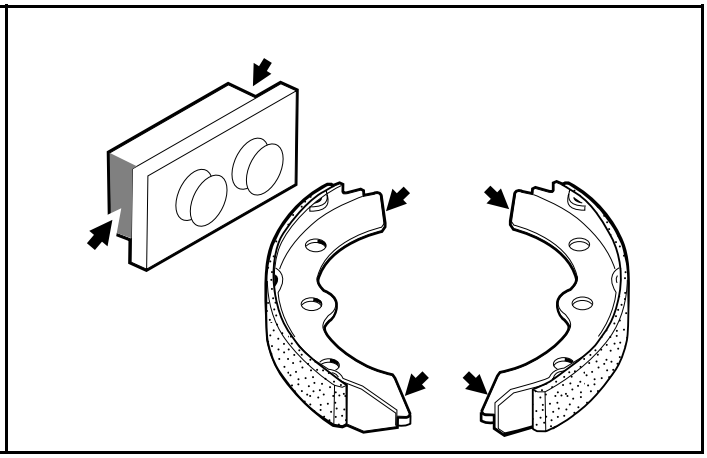

641
Figure 6-10 Apply Grease To Brake Shoes and Slots

7. Use a small brush to carefully apply a light coat of white lithium NLGI #2 grease (Dow Corning BR2-Plus or equivalent) to the brake adjuster assembly, adjuster wheel shoe slots, and the shaft of the adjuster wheel as shown **(Figure 6-11, Page 6-6)**. **See preceding WARNING.**
8. Install the adjuster wheel (1) and two washers (2 and 3) into the adjuster assembly **(Figure 6-7, Page 6-4)**.

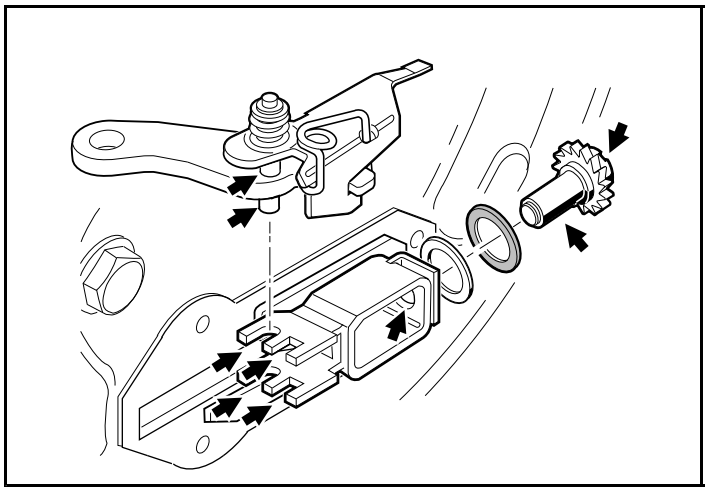

642

Figure 6-11 Apply Grease To Brake Adjuster

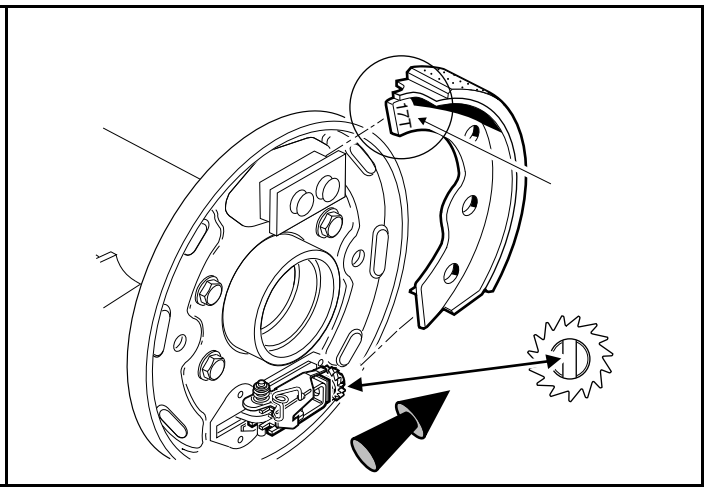

643

Figure 6-12 Install Adjuster Wheel, Trailing Shoe

BRAKE SHOE INSTALLATION

See General Warnings on page 1-1. See also Asbestos Dust Warning on page 6-1.

1. Turn the adjusting wheel screw so that the shoe slot is vertical, then position the trailing shoe in the slots in the shoe mounting block and adjuster assembly **(Figure 6-12, Page 6-6)**. **See following NOTE.**

NOTE: *The trailing shoe has 17T stamped into the tip of the shoe flange* ***(Figure 6-12, Page 6-6)****. The leading shoe is stamped 17L. When installing the shoes, the stamping on both shoes should be oriented to the top of the brake assembly. When installing the shoes on the passenger side of the vehicle, the side of the trailing shoe flange marked 17T should be facing out and be visible. On the driver side, the 17L on the leading shoe should be facing out and be visible.*

When installed on the backing plate, the ***leading*** *shoe (stamped 17L) is* ***always*** *oriented toward the* ***rear*** *of the vehicle.*

2. Install the shoe retainer clip, using pliers to compress the clip (1) while turning the retainer pin (2) into position **(Figure 6-13, Page 6-7)**.
3. Attach the springs onto the trailing shoe already installed. Then hold the leading shoe next to the trailing shoe, correctly oriented, and attach the springs to it **(Figure 6-14, Page 6-7)**.

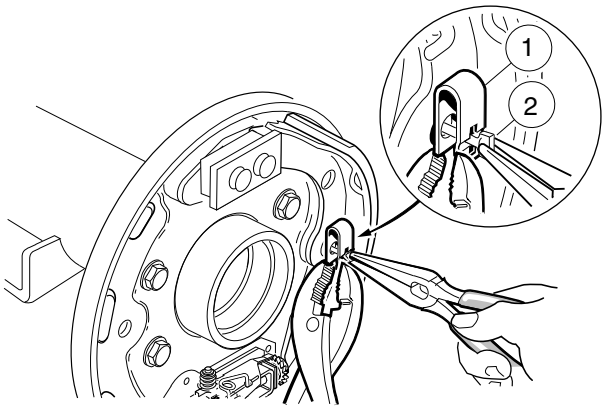

644

Figure 6-13 Install Trailing Shoe Retainer Clip

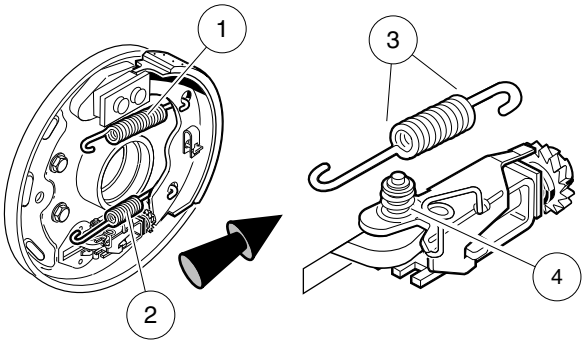

1. Bronze Spring 2. Silver Spring 3. Coils of Silver Spring 4. Adjustment Lever Spring

NOTE: The silver spring (2) is mounted with the coils (3) to the side of the adjustment lever spring (4).

645

Figure 6-14 Attach Springs

4. While maintaining spring attachment on both shoes, position tips of leading shoe (1) in the mounting slots and then push shoe into place. Hold shoe in position and install retaining clip **(Figure 6-15, Page 6-8)**.
5. After the shoes are installed, move them together up and down and side to side to make sure that they will easily slide approximately 1/4 to 3/8 inch (6.3 to 9.5 mm) without binding **(Figure 6-16, Page 6-8)**.

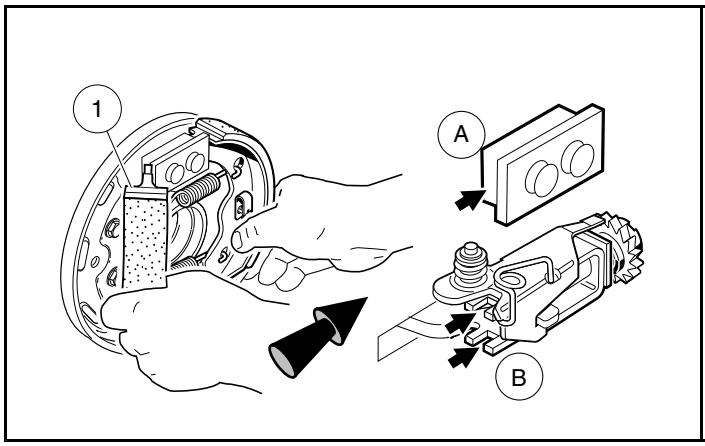

646

Figure 6-15 Install Leading Shoe

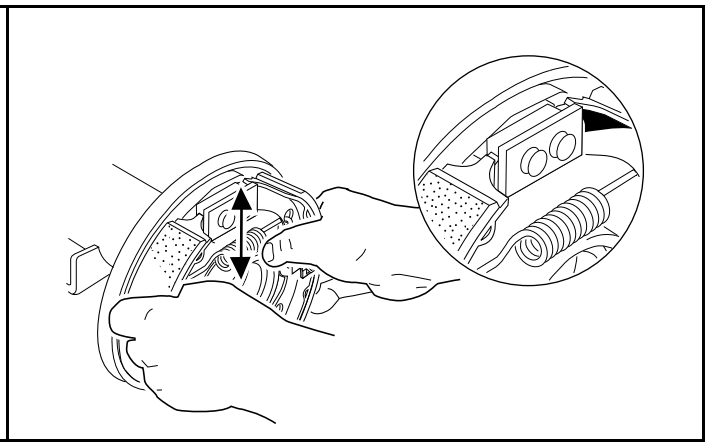

647

Figure 6-16 Check Shoe Positions

6. Place a flatblade screwdriver under the adjusting arm (1) and raise the arm off of the adjusting wheel (2). While holding the arm (1) up, turn the wheel (2) upward until it stops **(Figure 6-17, Page 6-8)**. Remove the screwdriver.

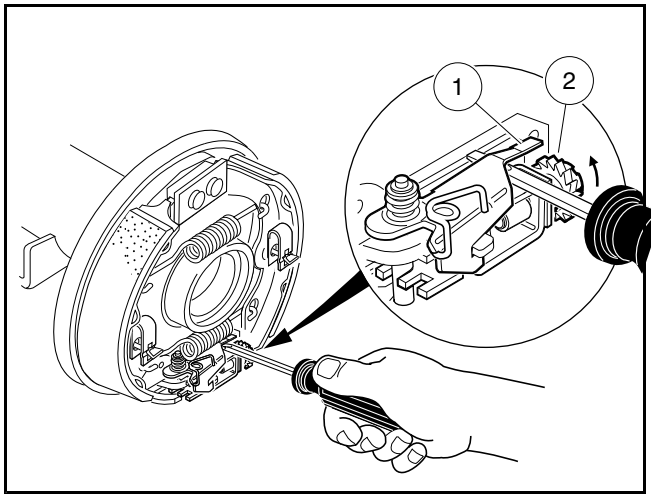

648

Figure 6-17 Set Adjusting Wheel

7. Install the rear axle onto the transaxle. **See following NOTE.**

NOTE: *There is a LEFT and RIGHT side axle. The splined portions on the axles that insert into the transaxle case are two different lengths. The longest length spline is the LEFT, or driver side axle.*

7.1. Insert the splined end of the axle shaft into the axle tube. Be careful not to damage the seal on the inside of the axle tube hub. Advance the shaft through to the bearing on the shaft, and rotate it to align the shaft splines with the splined bore of the differential gear. Continue advancing the shaft until the bearing on the axle is firmly seated within the axle tube hub seat.

7.2. Using 90° internal snap ring pliers (0.090 tip) (P/N 1012560), attach the internal retaining ring into the axle tube hub so that it seats against the axle bearing assembly and into the machined slot in the inside wall of the axle tube hub **(Figure 6-3, Page 6-2)**.

7.3. Place a 1/4 to 3/8 - inch (6 - 10 mm) diameter rod against the retaining ring and tap lightly at four or five locations to ensure it is properly seated. **See following WARNING and CAUTION.**

⚠ WARNING

- **Be sure retaining ring is properly seated in groove. If ring is not properly installed, the axle assembly will separate from the transaxle and damage the axle assembly and other components. Loss of vehicle control could result in severe personal injury or death.**

⚠ CAUTION

- **Before installing axle shaft, clean any residual oil from the exposed end of the axle tube and from the oil seal area.**

8. Install the brake drum, and make sure that it is properly seated. **See following NOTE.**

NOTE: *If drum installation is difficult, the brake shoes may need to be adjusted vertically in the mounting slots.*

9. After the drum is installed, make sure the axle and drum turn freely and then install the wheel. **See Wheel Installation on page 8-1.**
10. Remove the turnbuckle (2) and apply Loctite 242 to the threaded ends of both the rod from the pedal group (6) and the brake actuator rod (5) **(Figure 6-20, Page 6-14)**. Connect the rods using the turnbuckle. Ensure the ends of the brake cables do not slip out of the brake equalizer during this procedure.
11. Adjust brake cable equalizer. **See Brake Cable Equalizer Adjustment on page 6-10.**

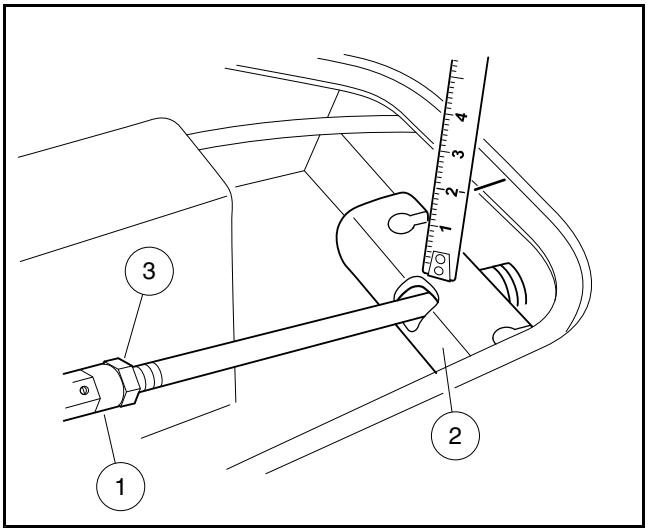

649

Figure 6-18 Equalizer Adjustment

BRAKE CABLE EQUALIZER ADJUSTMENT

See General Warnings on page 1-1. See also Asbestos Dust Warning on page 6-1.

1. After maintenance on the brake system is complete, lower the vehicle onto the floor. With the brake pedal in the full up or at rest position, adjust the turnbuckle (1) until the proper brake tension is achieved **(Figure 6-18, Page 6-9)**. The turnbuckle is properly adjusted when the distance from the top of the equalizer (2) to the upper flange surface is 2 inches ± 1/16 inch (51 mm ± 1.6 mm).
2. Ensure that both threaded rods are visible in the witness holes of the turnbuckle (1) before the jam nuts (3) are tightened.
3. Snug the front and rear jam nuts to their respective surfaces, then back the nuts off 1/4 - 3/8 inch (6.4 - 9.5 mm) and apply Loctite 242 on the threads for both front and rear jam nuts.
4. Tighten the rear jam nut first (labeled 1 of 2) to 156 in-lb (17.5 N·m) **(Figure 6-18, Page 6-9)**, then tighten the front jam nut to 156 in-lb (17.5 N·m). **See following WARNING.** For optimal performance, drive the vehicle and apply the brakes approximately 20 times to burnish the shoes, center the clusters, and adjust the brake mechanism.

⚠ WARNING

- **Reduced braking force could result if the jam nuts are not tightened in the proper sequence.**

5. Once steps 2 and 4 are complete, recheck the 2-inch specification listed in step 1. If the measurement has not changed, the adjustment is complete. If the measurement has changed, perform steps 1 through 4 again.
6. Replace access panel and floor mat.
   6.1. Place floor cover plate (7) over the floor opening and secure with fastener (10) **(Figure 5-9, Page 5-8)**.
   6.2. Install the floor mat (2) over the pedal group. Make sure tabs on floor mat sides are beneath the sill (3). Tighten screws (1) to 53 in-lb (6 N·m) **(Figure 5-8, Page 5-7)**.

BRAKE CLUSTER REMOVAL AND INSTALLATION

See General Warnings on page 1-1. See also Asbestos Dust Warning on page 6-1.

BRAKE CLUSTER REMOVAL

1. Disconnect the battery cables and discharge the controller as instructed. **See WARNINGS "To avoid unintentionally starting..." and "After disconnecting the batteries, wait 90 seconds..." in General Warnings on page 1-1.**
2. Place chocks at the front wheels and loosen the lug nuts on the rear wheels. Lift the rear of the vehicle with a chain hoist or floor jack. Place jack stands under the axle tubes to support the vehicle. **See WARNING "Lift only one end..." in General Warnings on page 1-1.**
3. Gain access to the pedal group by removing the floor mat and access panel. **See Pedal Group Removal on page 5-7.**
4. Loosen the two jam nuts (1 and 3) on either side of turnbuckle (2) **(Figure 6-1, Page 6-2)**. Note that the forward jam nut (1) is a left-hand thread. Thread each nut approximately 1/2 inch (12.7 mm) away from the turnbuckle.
5. Loosen turnbuckle (2) to release tension on the equalizer bracket (4) that pulls on the heads of the brake cables.
6. Remove lug nuts and rear wheels and then the brake drums.

NOTE: *When servicing vehicles with self-adjusting brakes with badly worn brake shoes and when the drums cannot be removed by normal methods, perform Step 7 of* ***Brake Shoe Removal on page 6-1****, then continue with this procedure.*

Although step 7 below allows easier access to the brake shoes, it is not imperative to do so in order to remove the brake shoes.

7. Remove the axle.
   7.1. Using 90° snap ring pliers (P/N 1012560), remove the axle retaining ring (1) **(Figure 6-3, Page 6-2)**.
   7.2. Pull the axle shaft (2) from the axle tube **(Figure 6-3, Page 6-2)**.
8. Remove bow tie locking pin (13) and clevis pin (12) from brake cable **(Figure 6-4, Page 6-3)**.
9. Remove four bolts (11) and lock nuts (10) that mount the brake assembly to the transaxle **(Figure 6-4, Page 6-3)**.
10. Remove brake assembly from transaxle.

BRAKE CLUSTER INSTALLATION

1. Install in reverse order of disassembly. Use new bow tie locking pins when installing brake cables.

⚠ CAUTION

- **Before installing axle shaft, clean any residual oil from the exposed end of the axle tube and from the oil seal area.**

2. Be sure bolts (11) (P/N 1014153) and new lock nuts (10) (P/N 1013924) are used to mount the brake assembly **(Figure 6-4, Page 6-3)**.
3. Tighten nuts to 17 ft-lb (23.0 N·m). If torquing the bolt heads, torque to 30 ft-lb (40.6 N·m).
4. Install the rear axle onto the transaxle. **See following NOTE.**

NOTE: *There is a LEFT and RIGHT side axle. The splined portions on the axles that insert into the transaxle case are two different lengths. The longest length spline is the LEFT, or driver side axle.*

4.1. Insert the splined end of the axle shaft into the axle tube. Be careful not to damage the seal on the inside of the axle tube hub. Advance the shaft through to the bearing on the shaft, and rotate it to align the shaft splines with the splined bore of the differential gear. Continue advancing the shaft until the bearing on the axle is firmly seated within the axle tube hub seat.

4.2. Using 90° internal snap ring pliers (0.090 tip) (P/N 1012560), attach the internal retaining ring into the axle tube hub so that it seats against the axle bearing assembly and into the machined slot in the inside wall of the axle tube hub.

4.3. Place a 1/4 to 3/8 - inch (6 - 10 mm) diameter rod against the retaining ring and tap lightly at four or five locations to ensure it is properly seated. **See following WARNING.**

⚠ WARNING

- **Be sure retaining ring is properly seated in groove. If ring is not properly installed, the axle assembly will separate from the transaxle and damage the axle assembly and other components. Loss of vehicle control could result in severe personal injury or death.**

5. Tighten lug nuts on rear wheels, using a crisscross pattern, to 55 ft-lb (74.6 N·m). **See Wheel Installation on page 8-1.**
6. Adjust the brakes. **See Brake Cable Equalizer Adjustment on page 6-10.**

BRAKE CABLE REMOVAL AND INSTALLATION

See General Warnings on page 1-1. See also Asbestos Dust Warning on page 6-1.

NOTE: *Beginning with Precedent vehicle serial number PD0918-020874, a new brake cable design* ***(Figure 6-19, Page 6-13)*** *and equalizer bracket design are used. The previous brake cable design for Precedent vehicles is no longer available through Service Parts. If a brake cable replacement becomes necessary for a Precedent built prior to the serial number listed above, then both brake cables and equalizer bracket must be replaced. Brake cable designs and/or equalizer bracket designs must not be mixed. Individual component parts from this kit will be available from Service Parts should replacement of either cable or the equalizer bracket become necessary on vehicles manufactured after the vehicle incorporation serial number listed above, or on earlier vehicles that have already been retrofitted with this kit.*

Installation of the new brake cables and brake equalizer will not replace nor eliminate the need for scheduled preventive maintenance. Brake systems require preventive maintenance and should not be neglected. Brake cleaning, lubrication and adjustments remain the same and should be performed as shown to optimize brake performance and service life. ***See Periodic Service Schedules on page 10-1.***

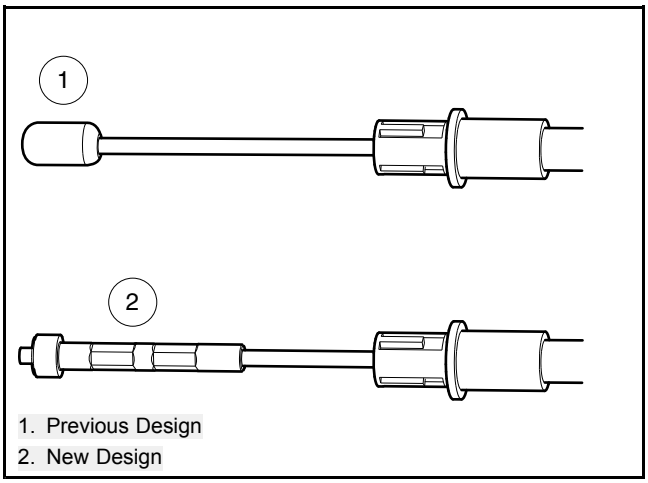

1380

Figure 6-19 Brake Cable Redesign

BRAKE CABLE REMOVAL

1. Disconnect the battery cables and discharge the controller as instructed. **See WARNINGS "To avoid unintentionally starting..." and "After disconnecting the batteries, wait 90 seconds..." in General Warnings on page 1-1.**
2. Place chocks at the front wheels.
3. Gain access to the pedal group by removing the floor mat and access panel. **See Pedal Group Removal on page 5-7.**
4. Loosen the two jam nuts (1 and 3) on either side of turnbuckle (2) **(Figure 6-20, Page 6-14)**. Note that the forward jam nut (1) is a left-hand thread. Thread each nut approximately 1/2 inch (12.7 mm) away from the turnbuckle.
5. Loosen turnbuckle (2) until the bolt (5) is free of the turnbuckle.

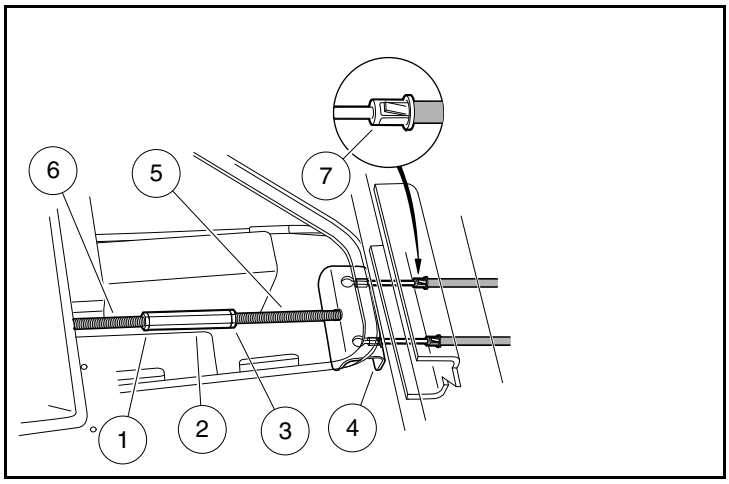

650

Figure 6-20 Loosen Brake Cables

6. Rotate the bolt (5) and equalizer bracket (4) to the upright position then slip the cable heads out of the bracket.
7. Remove nut (1) from the bolt (2) that secures front of the leaf spring **(Figure 6-22, Page 6-14)**. Do not remove bolt (2).
8. Remove the mounting tab (3) of the brake cable from the bolt.
9. Using brake cable release tool (P/N 102555501), compress the retaining clips (7) on the end of the cable housing enough to slide the cable end out of the hole in the frame **(Figure 6-20, Page 6-14)**.
10. Remove bow tie locking pin (1) and the clevis pin (2) from the brake lever on each wheel and pull the clevis (3) away from the lever. **(Figure 6-21, Page 6-14)**.
11. Using brake cable release tool (P/N 102555501), compress the retaining clips on the end of the cable housing enough to slip the cable end out of the bracket (4) and remove the brake cable from the vehicle.

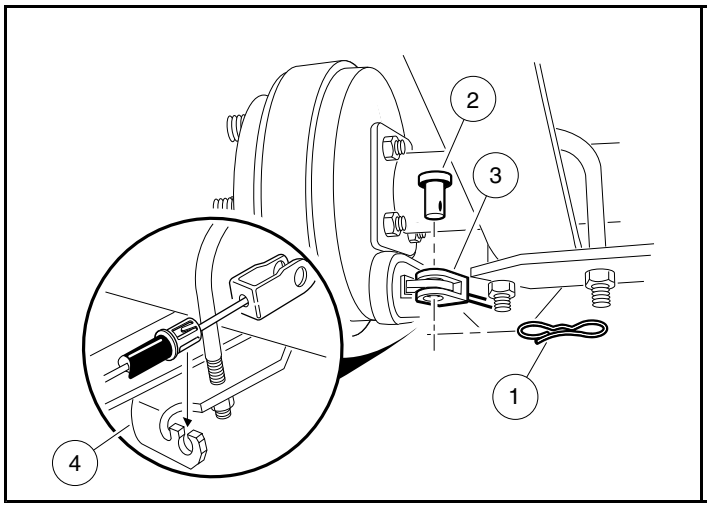

651

Figure 6-21 Disconnect Cables at Rear Brakes

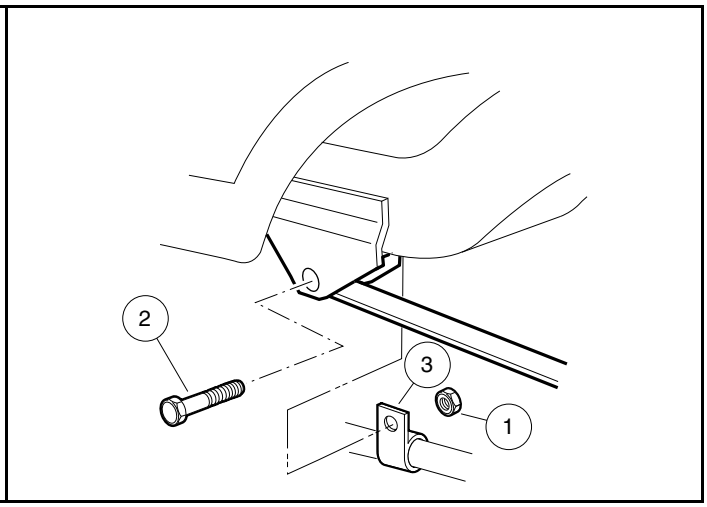

652

Figure 6-22 Brake Cable Mounting Tab

BRAKE CABLE INSTALLATION

⚠ WARNING

- **2009 model year Precedent vehicles had a running change in brake cable design (Figure 6-19, Page 6-13). Never mix components of the different designs. See NOTE at beginning of this section.**

NOTE: *The driver-side and passenger-side brake cables are not interchangeable. The driver-side cable is shorter than the passenger-side cable. Make sure the correct cable is used on the correct side.*

Be sure to orient the cable so that the clevis end goes to the wheel rather than to the equalizer bracket.

1. Insert the end of the new brake cable through the hole in the frame **(Figure 6-20, Page 6-14)**. Push on the cable housing so the clips on the housing ends secure the housing in the hole.
2. Hold the bolt (5) and the equalizer bracket (4) in the upright position and slip the cable head through the hole on top of the bracket. Pivot the equalizer to the horizontal position to capture the cable heads in the equalizer.
3. Insert the rear cable housing into the shock mount bracket (4) **(Figure 6-21, Page 6-14)**. Push the cable housing end into the bracket to ensure the clips on the housing end secure the cable in position.
4. At the rear wheel brake, connect the cable to the brake actuator arm using new clevis pin (2) and new bow tie locking pin (1) **(Figure 6-21, Page 6-14)**.
5. Place tab (3) on cable housing over the forward leaf spring mounting bolt (2) **(Figure 6-22, Page 6-14)**. Install nut (1). Tighten nut to 18.4 ft-lb (25 N·m).
6. Adjust the brakes. **See Brake Cable Equalizer Adjustment on page 6-10.**

⚠ DANGER

- **See General Warnings on page 1-1.**

⚠ WARNING

- **See General Warnings on page 1-1.**

GENERAL INFORMATION

Steering is controlled through a rack and pinion steering assembly that is connected by a steering column to a steering wheel. No manual adjustment to the rack and pinion gear assembly is required. A spring loaded self-adjusting mechanism is incorporated into the assembly.

STEERING WHEEL

See General Warnings on page 1-1.

STEERING WHEEL REMOVAL

1. Disconnect battery and spark plug wire(s). **See Disconnecting the Battery – Gasoline Vehicles on page 1-3.**
2. If scorecard holder is secured to steering wheel with screws, remove the two mounting screws (8) **(Figure 7-3, Page 7-3)**.
3. Remove the scorecard holder plate (1).
4. Match mark the steering wheel (7) and steering column shaft (9) so when the steering wheel is removed it can be placed back in exactly the same position on steering column shaft.
5. Loosen the steering wheel bolt (6) and back it off approximately 1/4 inch (6 mm). Do not remove the bolt.
6. If it is difficult to remove the steering wheel, use the steering wheel puller (P/N 102061201) to remove steering wheel.
   - 6.1. Place the puller anvil (4) through the top opening of the steering wheel **(Figure 7-1, Page 7-2)**.
   - 6.2. Insert the anvil feet through the two slots in the base plate (marked “B”) (5) as shown **(Figure 7-1, Page 7-2)**.
   - 6.3. Rotate the anvil screw (6) clockwise until the base plate contacts the bottom of the steering wheel where it attaches to the steering column **(Figure 7-2, Page 7-2)**.
   - 6.4. Using a 1/2 inch drive air impact wrench, tighten the anvil screw (6) until the steering wheel breaks free from the steering shaft.
   - 6.5. Remove the steering wheel puller.
   - 6.6. Remove the steering wheel bolt (6) and the steering wheel (7) from the steering column (9) **(Figure 7-3, Page 7-3)**.

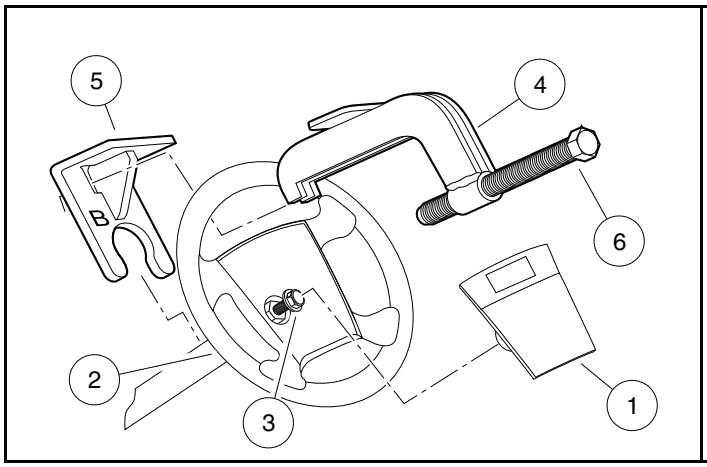

659
Figure 7-1 Steering Wheel Removal

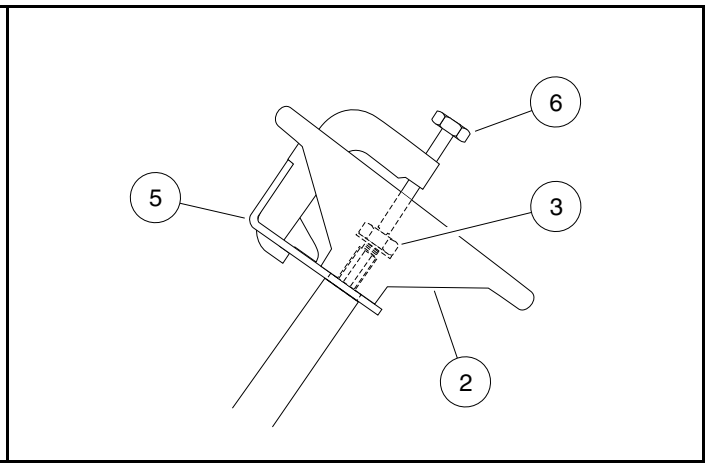

660
Figure 7-2 Steering Wheel Puller

STEERING WHEEL INSTALLATION

NOTE: *To minimize corrosion and to make future removal of the steering wheel easier, apply a small amount of oil or anti-seize compound to steering shaft before installing the steering wheel.*

1. Install the steering wheel (7) on the steering column shaft (9). Be sure to align the match marks placed on the wheel and steering column in step 4 above **(Figure 7-3, Page 7-3)**.
2. Install the steering wheel bolt (6) and tighten to 40.6 ft-lb (55 N·m).
3. Install the scorecard plate (1).
4. If required, install the plate mounting screws (8). Tighten screws to 16 in-lb (1.8 N·m).

STEERING COLUMN

See General Warnings on page 1-1.

STEERING COLUMN REMOVAL

1. Disconnect battery and spark plug wire(s). **See Disconnecting the Battery – Gasoline Vehicles on page 1-3.**
2. Remove the steering wheel as previously instructed.
3. Remove the dash insert, instrument panel, dash assembly, and front bumper. See Section 4 – Body and Trim.
4. Remove the bolt (11) that secures the steering column universal joint to the pinion shaft of the steering gear **(Figure 7-3, Page 7-3)**.
5. Remove the four bolts (10) that secure the steering column to the frame.
6. Remove the steering column from the vehicle.

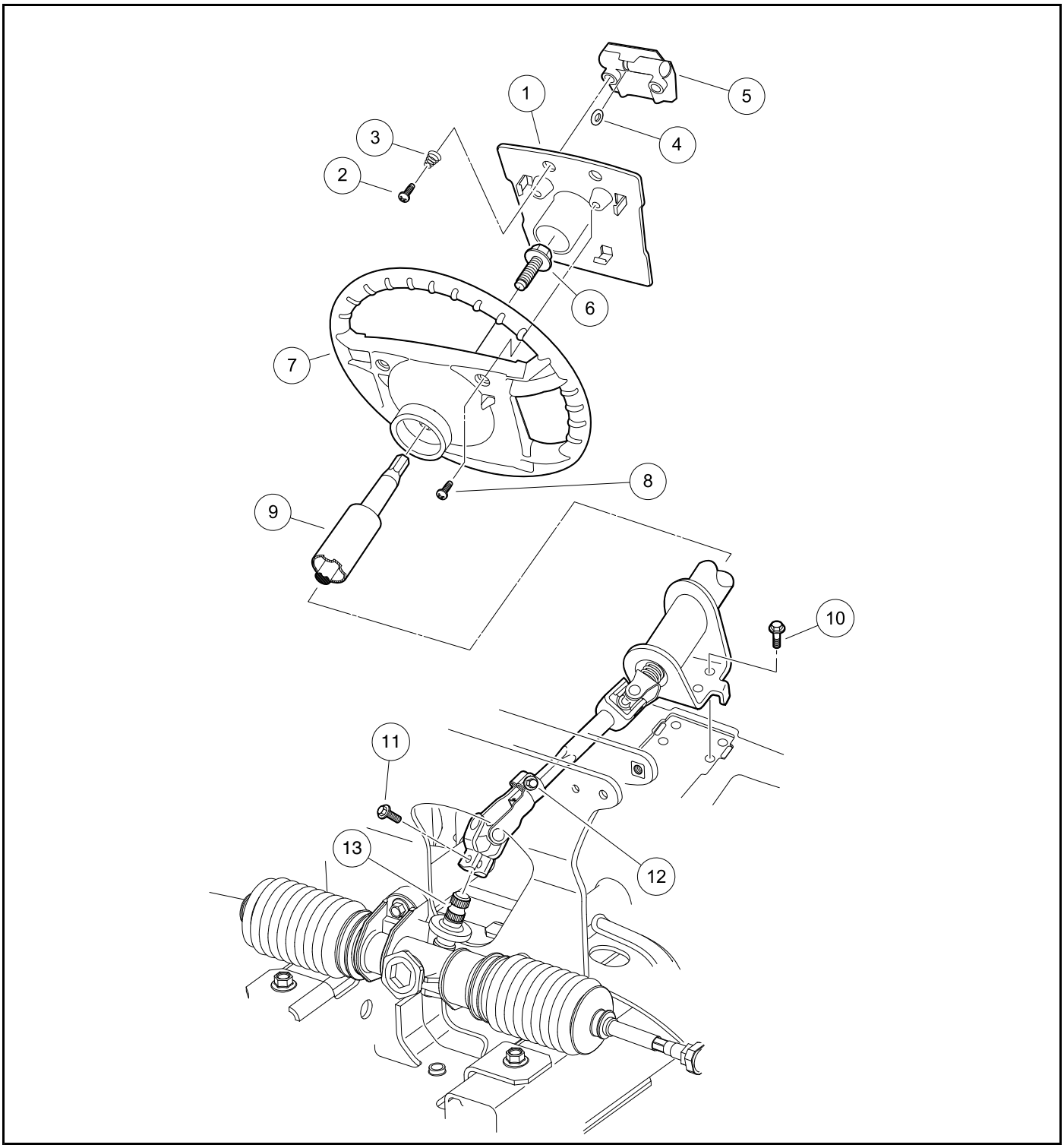

661

Figure 7-3 Steering Column

STEERING COLUMN INSTALLATION

1. For ease of assembly and to prevent corrosion, apply a light coat of anti-seize or lubricating compound to the splined stud extending from the steering gear.
2. Insert the end of the steering column with the universal joint through the front underbody. Install universal joint onto pinion shaft of steering gear. Loosely install bolt (11). Do not tighten until steering column is mounted to frame in step 3 **(Figure 7-3, Page 7-3)**.
3. Align the holes in the steering column mounting bracket with holes in the vehicle frame. Secure column to frame with four bolts (10). Tighten bolts to 18.4 ft-lb (25 N·m).
4. Tighten universal joint bolt (11) to 18.4 ft-lb (25 N·m). Verify the upper universal joint bolt (12) torque is 18.4 ft-lb (25 N·m).
5. Install front bumper, dash assembly, dash insert, and instrument panel. See Section 4 – Body and Trim.

RACK AND PINION

See General Warnings on page 1-1.

CAUTION

- **Front impacts that bend tie rods and/or drag links can possibly damage internal steering gear components. See Rack and Pinion Inspection on page 7-4. The manufacturer recommends inspecting the rack and pinion and replacing if damaged.**

RACK AND PINION INSPECTION

Look for obvious damage to the chassis, where the rack and pinion is mounted, and the rack and pinion housing. Particularly check the housing for broken mounting points.
Compare the toe-in against the specification. **See Toe-in Adjustment on page 7-12.**
If obvious visible damage is found, such as a bent tie rod, check the steering gear for abnormal free-play, noise, binding or clunking while it is under a load. With the steering system fully assembled and all four tires on the ground/floor, turn the steering wheel from stop to stop. While turning, feel for any binding, clunking or tight/loose spots. Listen for unusual noises. Replace the rack and pinion as an assembly if any is found.
In the event of an known impact and obvious visible damage is not found in the method described above, disconnect the tie rods and/or drag links from the spindles. Turn the steering wheel from stop to stop. While turning, feel for any binding or tight/loose spots. Listen for unusual noises. Replace the rack and pinion as an assembly if any is found.

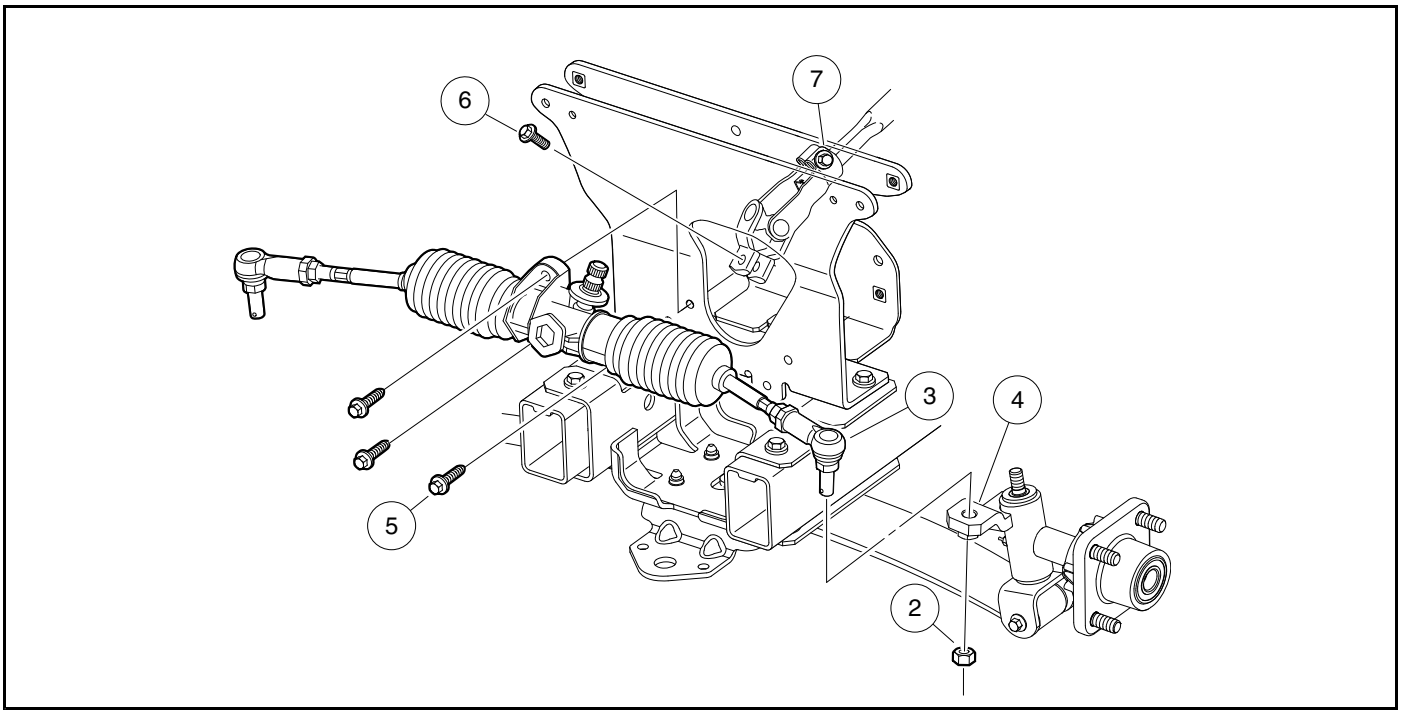

1383

Figure 7-4 Rack and Pinion Removal

RACK AND PINION REMOVAL

1. Disconnect battery and spark plug wire(s). **See Disconnecting the Battery – Gasoline Vehicles on page 1-3.**
2. Remove the front bumper as instructed. See Section 4 – Body and Trim.
3. Remove the tie rod end retaining nuts (2) **(Figure 7-4, Page 7-5)**.
4. Remove the tie rod ends (3) from the spindle assemblies.
5. Remove the three bolts (5) from the steering rack and pinion assembly mounting bracket.
6. Remove the upper bolt (7) from the universal joint, then remove the rack and pinion assembly and universal joint from the vehicle.

RACK AND PINION DISASSEMBLY

NOTE: *Only the rack and pinion manufactured by Mando can be disassembled for repair. A rack and pinion manufactured by Sona is not serviceable and must be replaced as an assembly. They can be identified by the following characteristics:*

- **Bellows:** Mando has their name on bellows; Sona does not
- **Tie Rod Drag Link Color:** Mando is yellow dichromate; Sona is grey dichromate

1. Remove the two tie rod ends (12) and inspect for excessive wear **(Figure 7-5, Page 7-7)**.
2. Remove clamps (10 and 21) from bellows (9) **(Figure 7-5, Page 7-7)**.

NOTE: *If the dust seal bellows are secured with a metal clamp, remove the clamp. Do not reuse the clamp when the rack and pinion is reassembled. Use a plastic wire tie to secure the dust seal bellows.*

3. Remove the two hex nuts (11) and slide off both of the dust seal bellows (9) from ball joints (8).
4. Remove rack screw nut (14), rack guide screw (13), rack guide pressure spring (15) and the rack guide (16).
5. Remove bolt (6) and slide universal joint off the pinion shaft **(Figure 7-4, Page 7-5)**.
6. Remove the dust seal **(Figure 7-6, Page 7-8)**.
7. Remove the large snap ring (4) **(Figure 7-7, Page 7-8)**.
8. Remove pinion (5) from the housing (17) **(Figure 7-8, Page 7-8)**. If removal is difficult, install the universal joint onto the pinion and place a fork or a large open-end wrench under the universal joint **(Figure 7-8, Page 7-8)**. Gently pry the pinion from the housing and then remove the universal joint.
9. If the ball bearing (4) **(Figure 7-5, Page 7-7)** has been damaged, remove the C-type stop ring (16) **(Figure 7-7, Page 7-8)** and press the bearing off **(Figure 7-9, Page 7-8)**.
10. Inspect the bushing (7) and needle bearing (6) for excessive wear. If wear is excessive, replace the entire assembly **(Figure 7-5, Page 7-7)**.
11. Inspect the ball joints (8) for wear. If one or both of the ball joints (8) are excessively worn, remove and replace the ball joint from the rack (18).
12. Remove the rack (18) from housing (17).

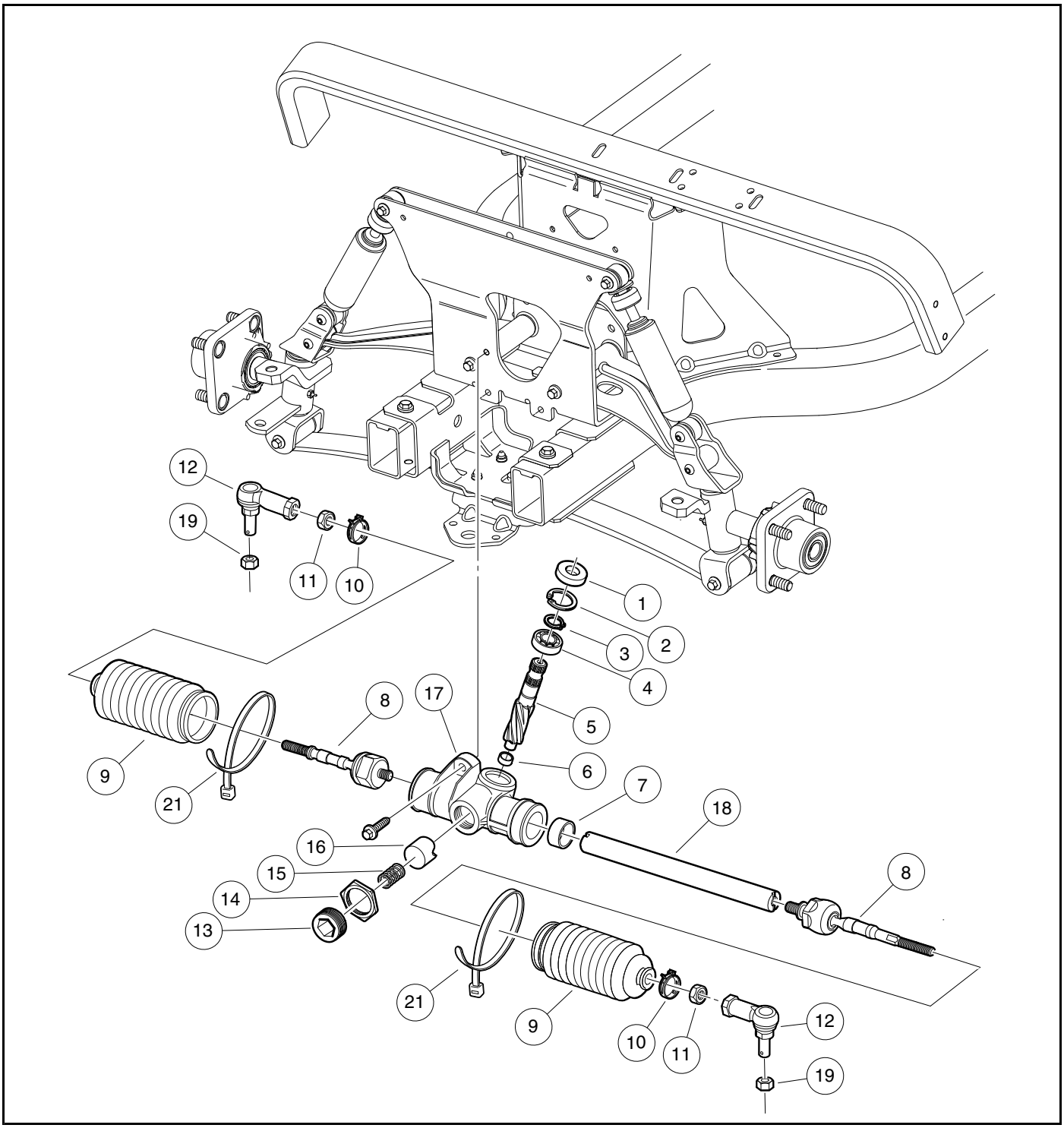

1384

Figure 7-5 Steering Gear

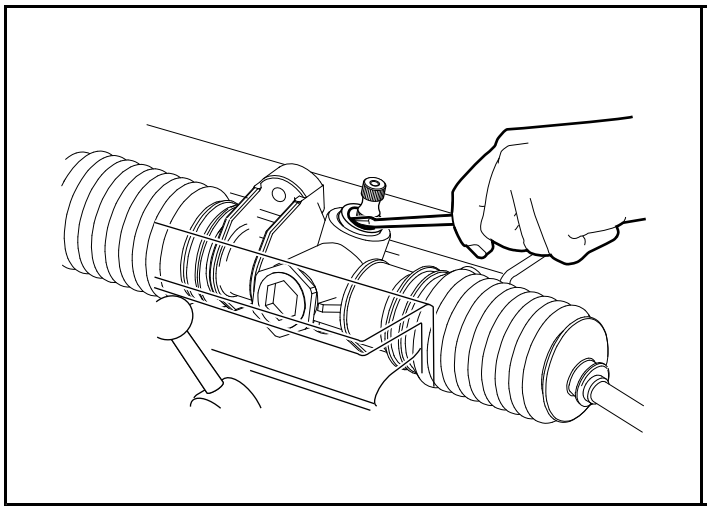

664

Figure 7-6 Remove Dust Seal

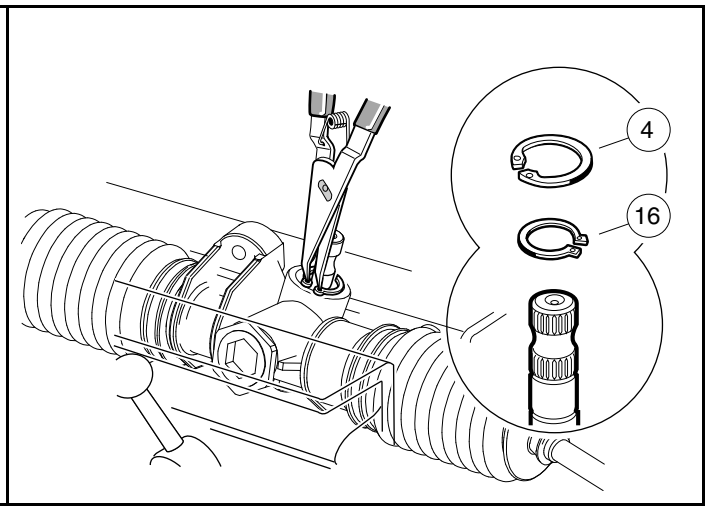

665

Figure 7-7 Pinion Snap Rings

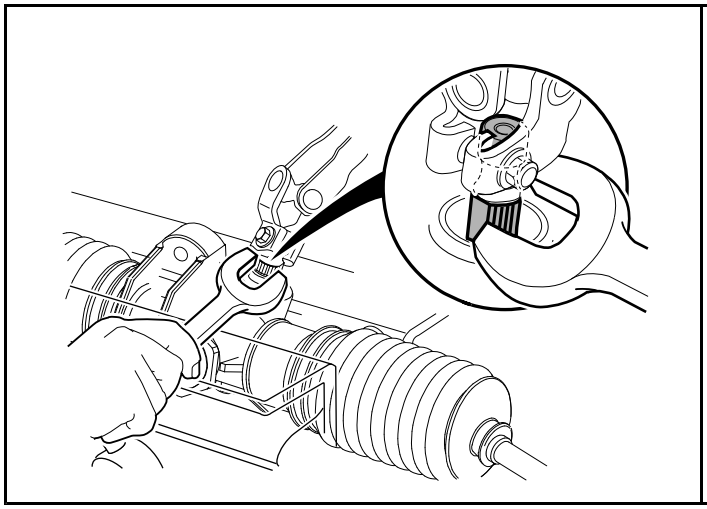

666

Figure 7-8 Remove Pinion from Housing

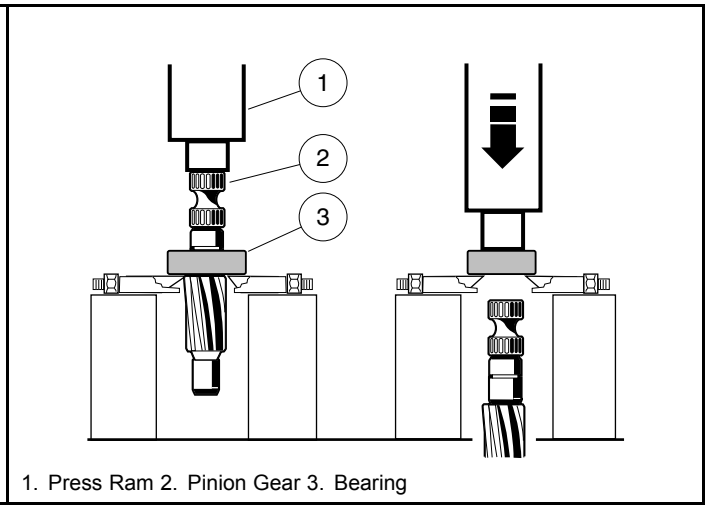

667

Figure 7-9 Remove Bearing from Pinion

RACK AND PINION ASSEMBLY

1. Apply a liberal amount of EP grease to the teeth of the rack (18), then slide the rack through the bushing (7) and housing (17) **(Figure 7-5, Page 7-7)**.

CAUTION

- **In step 2, do not press against the outer race of the bearing.**

2. If the pinion bearing (4) was removed, grease a new bearing before installation. Press new bearing onto pinion shaft, exerting all pressure on the inner race. Then install the C-type stop ring (3). **See previous CAUTION.**
3. Install pinion (5) and bearing (4) assembly into the housing (17). Make sure the rack gear teeth will mesh with the gear teeth on the pinion. The rack may need to be rotated slightly while lightly tapping on the pinion-bearing assembly with a rubber mallet. **See following CAUTION.**

CAUTION

- **Do not force the pinion-bearing assembly into the housing. The gear teeth or the small bearing could be damaged.**

4. Install the large snap ring (2).
5. Use a socket (1) to apply pressure evenly and press in a new dust seal (2) **(Figure 7-10, Page 7-10)**.
6. Apply a small amount of grease to the rack guide (16) where it comes into contact with the rack (18) **(Figure 7-5, Page 7-7)**.
7. Install the ball joints (8) onto the rack (18) by securing the rack in a vise using wood blocks between the rack and the jaws of the vise to protect the rack from damage. Tighten the ball joints to 60 ft-lb (81 N·m).
8. Tap a flange into the notch on the rack **(Figure 7-11, Page 7-10)**.
9. Place a few drops of Loctite 222 to the threads of the rack screw nut (14) **(Figure 7-5, Page 7-7)**.
10. Install the rack guide (16), pressure spring (15) and rack guide screw (13). The screw should be threaded-in until it bottoms out and then backed out 1/4 turn **(Figure 7-5, Page 7-7)**.
11. To minimize corrosion, apply a light coat of anti-seize lubricating compound to the splines of the pinion shaft.
12. Install lower end of the universal joint (2) onto pinion shaft and secure with bolt (1) **(Figure 7-13, Page 7-10)**. Tighten bolt (1) to 15 ft-lb (20.3 N·m).
13. To adjust rotational resistance (preload), insert a 3/8-inch, 1/4-drive, deep-well socket into the steering column (upper) end of the universal joint (2) and tighten the bolt (1) to 15 ft-lb (20.3 N·m) **(Figure 7-13, Page 7-10)**.
14. Use a torque wrench connected to the 3/8-inch deep-well socket to measure the resistance of the rack and pinion. Rotational resistance should measure 7 to 15 in-lb (0.8 to 1.7 N·m).
15. If measured resistance is not 7 to 15 in-lb (.8 to 1.7 N·m), adjust the screw (13) until correct setting is achieved. Tighten the nut (14) to 28 ft-lb (38 N·m) **(Figure 7-12, Page 7-10)**.

NOTE: *When tightening the nut (14), make sure the screw (13) does not change adjustment* ***(Figure 7-12, Page 7-10)****.*

16. Remove the 3/8-inch, 1/4-drive, deep-well socket from the steering column end of the universal joint (2).
17. Install the two dust seal bellows (9) **(Figure 7-5, Page 7-7)**.
18. Install new bellows clamps (wire ties) (10 and 21).
19. Install the tie rod ends (12) to each end of rack (18). Tighten the tie rod end jam nuts (11) to 26 ft-lb (35 N·m) **(Figure 7-5, Page 7-7)**.

RACK AND PINION INSTALLATION

1. To minimize corrosion, apply a light coat of anti-seize lubricating compound to the end of the steering column shaft.
2. Simultaneously slide the universal joint over the square end of the steering column shaft and position the assembly over the mounting holes in the chassis.
3. Install three screws to secure the assembly to the chassis. Tighten screws to 22 ft-lb (30 N·m).
4. Install the upper universal joint bolt (7) and tighten to 18.4 ft-lb (25 N·m) **(Figure 7-4, Page 7-5)**.
5. Install the tie rod ends (3) into the left- and right-hand spindle tabs (4), and then install the retaining nuts (2) **(Figure 7-4, Page 7-5)**. **See following WARNING.**

⚠ WARNING

- **Do not operate vehicle until toe-in is adjusted and ball joints are secured.**

6. Adjust the toe-in. **See Toe-in Adjustment on page 7-12.**

7. Test drive vehicle before returning it to service.

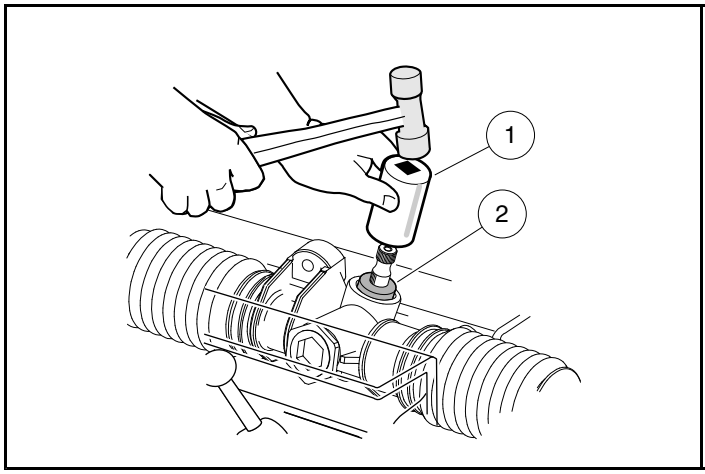

668

Figure 7-10 Press In Dust Seal

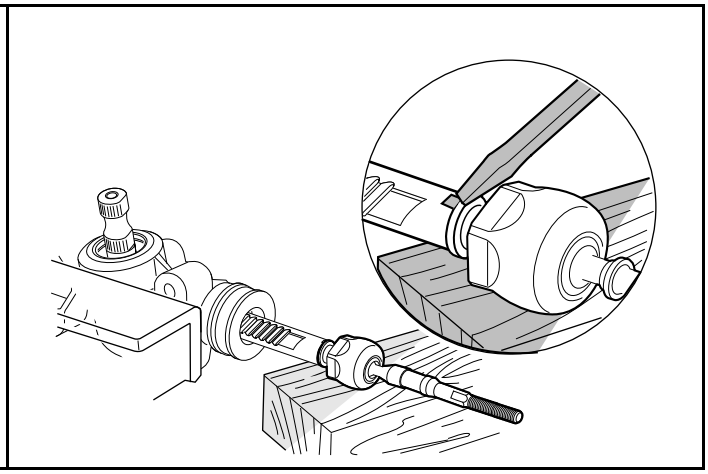

669

Figure 7-11 Install Ball Joint

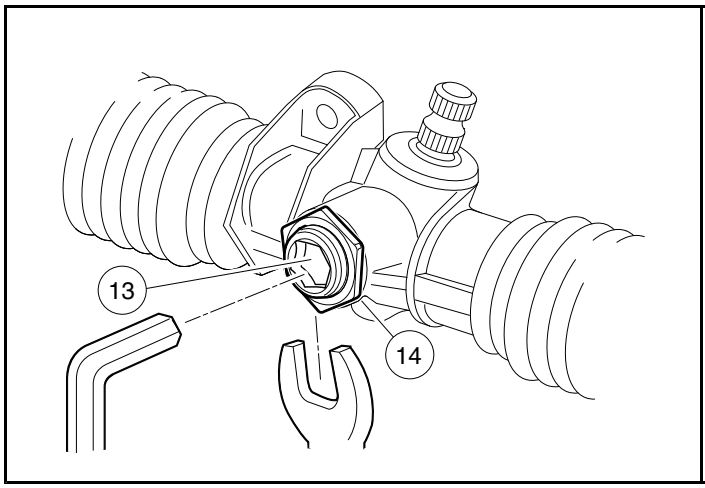

670

Figure 7-12 Rack and Pinion Adjustment

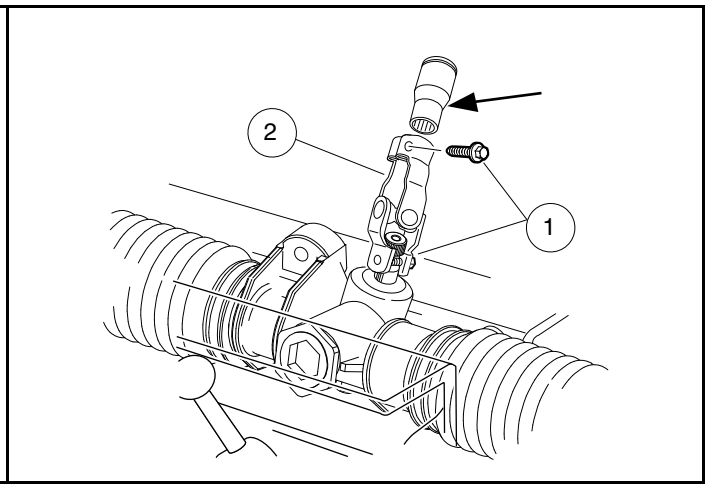

671

Figure 7-13 Rack and Pinion Resistance

FRONT SUSPENSION

See General Warnings on page 1-1.

LUBRICATION

Two grease fittings are provided (one in each spindle housing). Lubricate these fittings at the recommended interval with the proper lubricant. **See Periodic Lubrication Schedules on page 10-3.**

CAUTION

- **To ensure proper lubrication, raise front of vehicle to lubricate. See General Warnings on page 1-1.**

WHEEL ALIGNMENT

Wheel alignment is limited to equalizing the camber angle of each front wheel and adjusting toe-in of the front wheels.

NOTE: *Prior to making any front suspension adjustments, inspect components for wear or damage and repair or replace as necessary.*

Camber Adjustment

1. Check each front wheel with a framing square. At the floor (or ground), there should be an equal amount of space between each tire and the framing square **(Figure 7-14, Page 7-12)**.
2. Loosen, but do not remove, the four bolts (17) that secure the leaf spring (13) to the bottom spring plate (16) **(Figure 7-20, Page 7-17)**. **See also Figure 7-15, Page 7-12.**
3. Loosen, but do not remove, the hex nut (8) on the adjustment eccentric (7) **(Figure 7-15, Page 7-12)** in the center of the spring. **See also Figure 7-20, Page 7-17.**
4. Use a 7 mm deep well socket to rotate the eccentric **(Figure 7-15, Page 7-12)**.
5. After adjusting camber, use a crisscross pattern to tighten the four spring retaining bolts (17) **(Figure 7-20, Page 7-17)** to 37 ft-lb (50 N·m). Then roll the vehicle forward one full tire revolution and recheck the camber. **See also Figure 7-14, Page 7-12.**
6. Tighten the hex nut (8) on the adjustment eccentric (7) to 10 ft-lb (13.5 N·m) **(Figure 7-15, Page 7-12)**. **See also Figure 7-20, Page 7-17.**

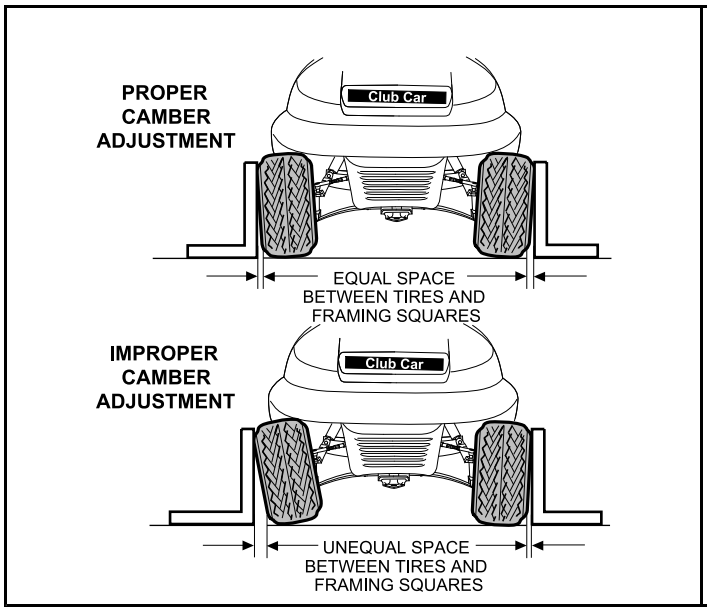

672

Figure 7-14 Check Camber

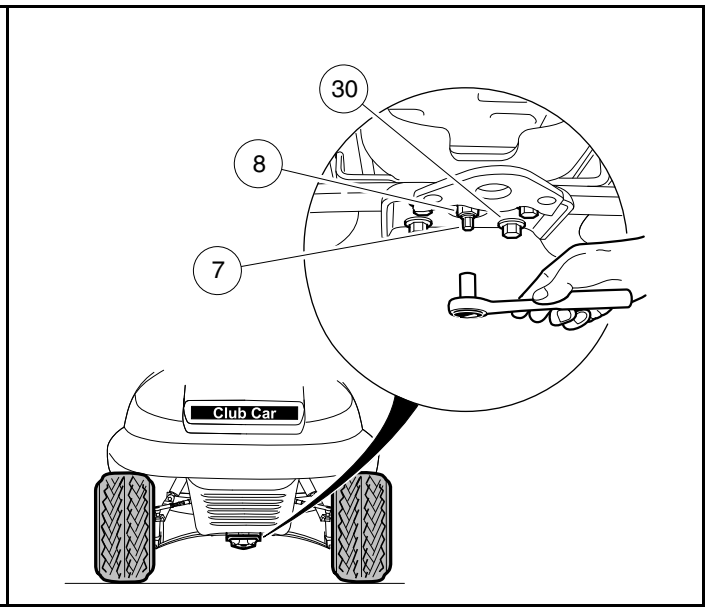

673

Figure 7-15 Adjust Camber

Toe-in Adjustment

1. On a level surface, roll the vehicle forward, then stop. Make sure the front wheels are pointed straight ahead. Do not turn the steering wheel again during this procedure.
2. On each front tire, mark (as closely as possible) the center of the tread face that is oriented toward the rear of the vehicle. The marks should be even with the bottom surfaces of the vehicle frame.
3. Measure the distance between the marks on the rear-facing surfaces of the tires, and then roll the vehicle forward one and a half wheel revolutions until the marks appear on the forward facing surfaces of the tires at about the same height from the floor **(Figure 7-16, Page 7-12)**.

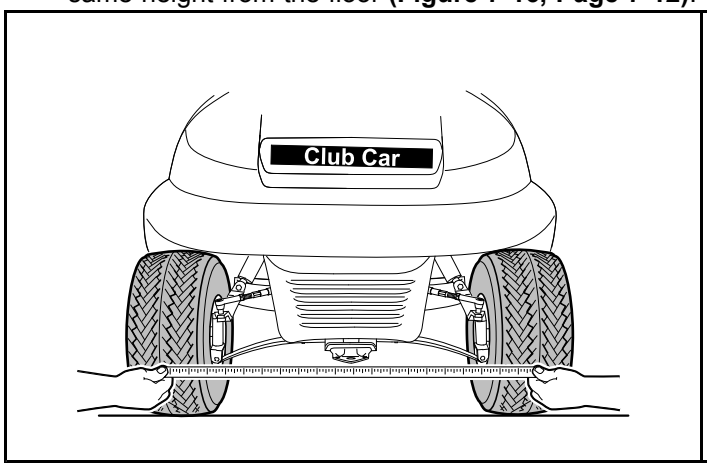

674

Figure 7-16 Check Toe-In

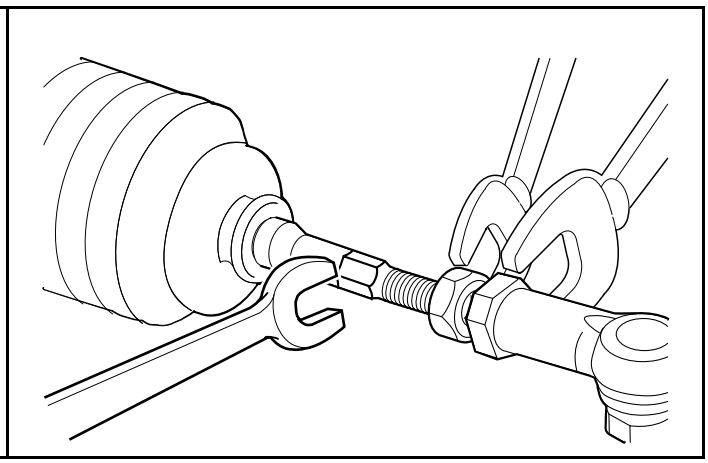

2376

Figure 7-17 Adjust Toe-In

4. Measure the distance between the marks on the forward-facing surfaces of the tires **(Figure 7-16, Page 7-12)**.

NOTE: *The front measurement must be less than the rear measurement.*

5. Subtract the measurement on the front of the tires from the measurement on the rear of the tires. The difference is the toe-in. Proper toe-in is 3/8 inch ± 1/8 inch (9.5 mm ± 3.2 mm).
6. If adjustment is necessary, proceed as follows:
   6.1. Loosen the jam nuts on both ends of each drag link **(Figure 7-17, Page 7-12)**.

6.2. Rotate both of the drag links equally. To increase the toe-in, rotate both drag links counterclockwise. To decrease the toe-in, rotate both drag links clockwise. Maintain an equal distance from the ball joint to the end of the threads on each drag link **(Figure 7-18, Page 7-13)**.

6.3. Tighten jam nuts to 26 ft-lb (35 N·m).

6.4. Check the toe-in, and repeat the adjustment procedure if necessary.

6.5. After toe-in adjustment is made and with wheels in the straight ahead position, the steering wheel should be at the center of its travel. There should be equal travel to the left and right.

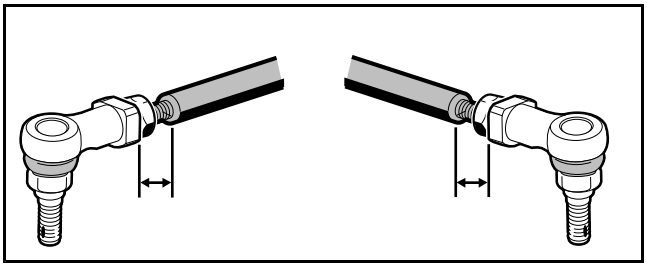

2064
Figure 7-18 Adjust Both Drag Links To An Equal Distance

FRONT SUSPENSION COMPONENTS

See General Warnings on page 1-1.

TIE ROD END REMOVAL

1. Disconnect battery and spark plug wire(s). **See Disconnecting the Battery – Gasoline Vehicles on page 1-3.**
2. Loosen jam nuts (13) to allow later rotation of the tie rod ends (12) **(Figure 7-19, Page 7-16)**.
3. Remove the retaining nuts (14).
4. Lift male thread of tie rod from the hole in the spindle tab.
5. Remove the tie rod ends from the steering gear.
6. To minimize corrosion, apply a light coat of anti-seize lubricating compound to the threads where the tie rod ends are installed.

TIE ROD INSTALLATION

1. Thread tie rod ends (12) onto steering gear to a depth of 1/2 inch (12.5 mm) **(Figure 7-19, Page 7-16)**.

⚠ WARNING

- **The tie rod ends must be threaded into the rod at least 5/16 of an inch (8 mm). Failure to thread deep enough may cause tie rod ends to separate from the rod during adjustment or while being operated, possibly resulting in loss of vehicle control and severe personal injury.**

2. Install tie rod ends (12) into the spindle tabs. Install the retaining nuts (14) **(Figure 7-19, Page 7-16)**.
3. Adjust wheel toe-in. **See Toe-in Adjustment on page 7-12.**

LEAF SPRING REMOVAL

1. Disconnect battery and spark plug wire(s). **See Disconnecting the Battery – Gasoline Vehicles on page 1-3.**
2. Loosen lug nuts on both front wheels and raise front of vehicle with a chain hoist or floor jack. Place jack stands under the aluminum rails of the vehicle frame just aft of the front suspension. Lower the vehicle onto the jack stands. **See General Warnings on page 1-1.**
3. Remove both front wheels.
4. Remove the bolts (8) from the bottom of each kingpin (7) **(Figure 7-20, Page 7-17)**.
5. Remove the four bolts (17) and bottom spring plate (16).
6. Remove leaf spring (13).
7. Check the condition of the urethane bushings (15) and steel sleeves (14). Replace any that are worn or damaged.

LEAF SPRING INSTALLATION

1. Install urethane bushings (15) and steel sleeves (14) into leaf spring eyes **(Figure 7-20, Page 7-17)**.
2. Install leaf spring (13), bottom spring plate (16), and four bolts (17). Using a crisscross pattern sequence, tighten bolts to 37 ft-lb (50 N·m).
3. Install spring in kingpins (7) with bolts (8). Tighten to 30 ft-lb (41 N·m).
4. Install the wheels and finger tighten the lug nuts.
5. Lower the vehicle and finish tightening lug nuts (using a crisscross pattern) to 55 ft-lb (74.6 N·m).
6. Adjust camber and toe-in. **See Wheel Alignment on page 7-11.**

KINGPIN AND STEERING SPINDLE REMOVAL

1. Disconnect battery and spark plug wire(s). **See Disconnecting the Battery – Gasoline Vehicles on page 1-3.**
2. Remove the front hub. **See Front Hub Removal on page 7-18.**
3. Remove retaining nuts (14), then remove tie rod ends (12) from the tabs on the spindles **(Figure 7-19, Page 7-16)**.
4. Remove the nut (1) from the top of the kingpin (7) **(Figure 7-20, Page 7-17)**.
5. Raise the upper clevis from the kingpin.
6. Slide the spindle (3) off the kingpin (7).
7. Remove the wave washer (6) and inspect it. If the washer is broken or has a wave bottom to wave crest height dimension of less than 0.040 inch (1 mm), it must be replaced.
8. Remove bolt (8) from bottom of kingpin (7) and remove kingpin.
9. Inspect the kingpin and spindle. If either is worn or damaged, it must be replaced.
10. Inspect the bushings (4). If the bushings are worn or damaged, remove them and press in new ones.

KINGPIN AND STEERING SPINDLE INSTALLATION

1. Inspect all parts and replace them as necessary.
2. Install the kingpin (7) over the leaf spring eye. Insert the bolt (8) **(Figure 7-20, Page 7-17)**. Tighten the bolt to 30 ft-lb (41 N·m).
3. Install the wave washer (6) on the kingpin.

4. Install the steering spindle on the kingpin. Place upper clevis over the kingpin threads and install nut (1). Tighten the nut to 70 ft-lb (95 N·m).
5. Attach the tie rod ends (12) to the spindle tabs, then install and tighten the nuts (14) to 70 ft-lb (95 N·m) **(Figure 7-19, Page 7-16)**.
6. Install front hub and wheel. **See Hub Installation on page 7-18.**

CONTROL ARM REMOVAL

1. Disconnect battery and spark plug wire(s). **See Disconnecting the Battery – Gasoline Vehicles on page 1-3.**
2. Loosen lug nuts on both front wheels and raise front of the vehicle with a chain hoist or floor jack. Place jack stands under the front aluminum rails of the vehicle frame and lower the vehicle onto the jack stands.
3. Remove wheel.
4. Remove bolts (17) and move rack and pinion to allow clearance for bolt (19) **(Figure 7-19, Page 7-16)**.
5. Remove bolts (11 and 19).
6. Remove the control arm (6).
7. Inspect the bushings (7) and sleeves (8 and 9) in the control arm and replace them if necessary.

CONTROL ARM INSTALLATION

1. Install the control arm in reverse order of removal. Tighten the control arm bolts (11 and 19) to 30 ft-lb (41 N·m) **(Figure 7-19, Page 7-16)**. Tighten three rack and pinion mounting bolts (17) to 22 ft-lb (30 N·m)
2. Install the wheels and adjust the wheel alignment as instructed on page 7-11.

SHOCK ABSORBER REMOVAL

1. Inspect the shock absorbers for fluid leakage at the point where the shaft enters the shock absorber body. Leaking shock absorbers should be replaced.
2. Remove the upper bolt (18) **(Figure 7-19, Page 7-16)**.
3. Remove the lower bolt (10).
4. Remove the shock absorber.

SHOCK ABSORBER INSTALLATION

NOTE: *When installing shock absorbers, make sure front shocks have identical part numbers.*

1. Install the shock absorber by reversing the removal procedure.
2. Tighten the bolts to 16 ft-lb (21 N·m).

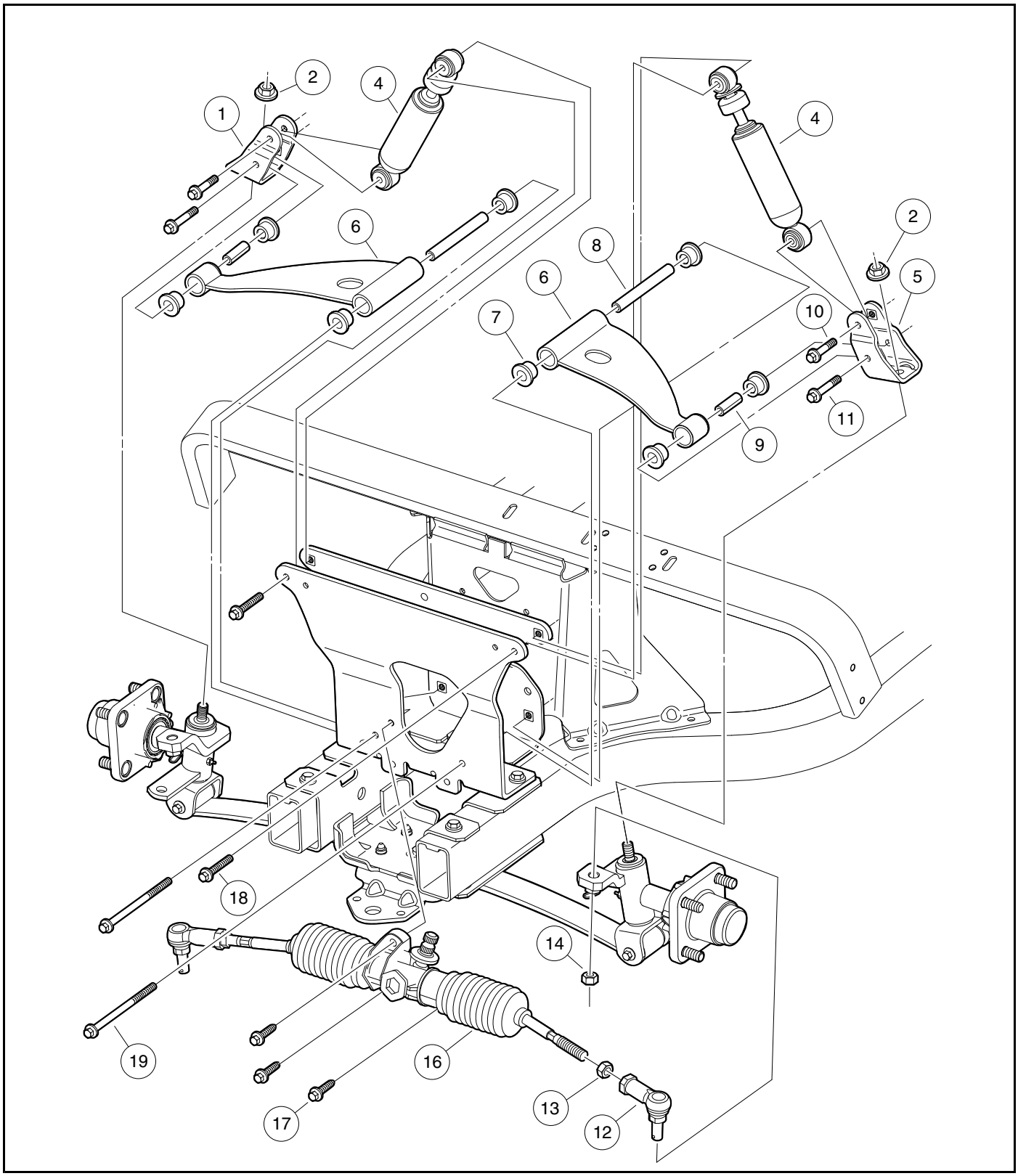

1311

Figure 7-19 Upper Front Suspension Assembly

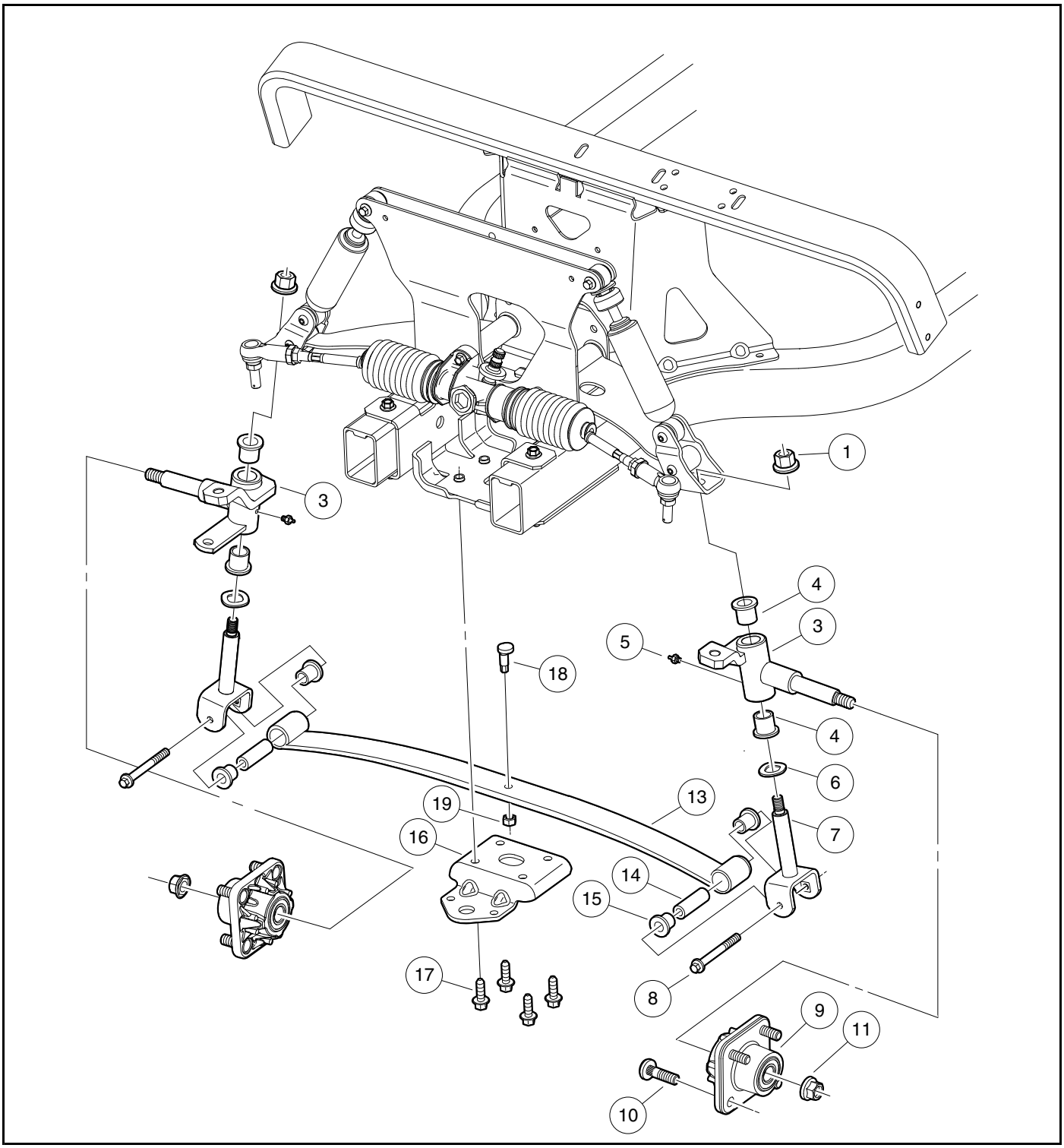

1312

Figure 7-20 Lower Front Suspension Assembly

FRONT WHEEL BEARINGS AND HUBS

See General Warnings on page 1-1.

NOTE: *The front wheel bearings are pressed into the spindle and are not serviceable. If excessive free-play is detected the entire hub should be replaced.*

FRONT WHEEL FREE PLAY INSPECTION

1. Disconnect battery and spark plug wire(s). **See Disconnecting the Battery – Gasoline Vehicles on page 1-3.**
2. Raise the front of the vehicle.
3. Use your hands to attempt to rock the wheel and hub assembly back and forth on the spindle. Movement of the wheel and hub on the spindle indicates that the hub bearing is worn; therefore, the hub assembly must be replaced. **See Front Hub Removal on page 7-18.**

FRONT HUB REMOVAL

1. Remove the front wheels. **See Wheel Removal on page 8-1.**
2. Remove dust cap (12) and lock nut (11) **(Figure 7-20, Page 7-17)**.
3. Slide the hub assembly (9) off of the spindle shaft (3).
4. Lightly sand spindle shaft to clean away any light rust.
5. Inspect the surface of the spindle shaft for surface damage. It should be clean and smooth. If severe pitting from rust or corrosion has occurred, replace the spindle assembly. **See Kingpin and Steering Spindle Removal on page 7-14.**

HUB INSTALLATION

1. Clean and apply a light coat of anti-seize lubricant to the spindle shaft (3).
2. Slide the hub assembly (9) onto the spindle shaft **(Figure 7-21, Page 7-19)**.
3. Install a new flanged lock nut (11) and tighten to 50 ft-lb (68 N·m).
4. Rotate the hub. The hub should rotate smoothly without binding, side play, or any indication of rough spots.
5. Repeat the procedure for the opposite wheel.
6. Install wheels and finger-tighten lug nuts.
7. Lower the vehicle and finish tightening lug nuts, using a crisscross pattern, to 55 ft-lb (74.6 N·m).

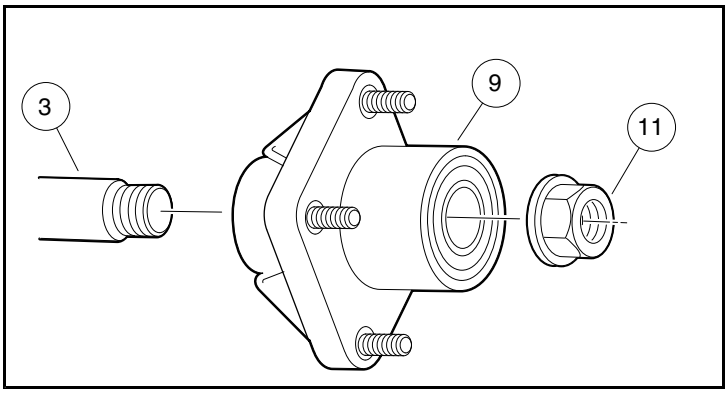

678

Figure 7-21 Front Wheel Hub

⚠ DANGER

- **See General Warnings on page 1-1.**

⚠ WARNING

- **See General Warnings on page 1-1.**

GENERAL INFORMATION

Maximum tire life and good vehicle handling qualities are directly related to proper wheel and tire care.

- Keep tires properly inflated. See Section 2 – Vehicle Specifications.
- Keep lug nuts properly tightened.
- Keep the front end aligned and adjusted.

⚠ WARNING

- **Tires affect vehicle handling. When selecting a replacement tire, use only original equipment or comparable tires.**

WHEELS

See General Warnings on page 1-1.

WHEEL REMOVAL

1. Disconnect battery and spark plug wire(s). **See Disconnecting the Battery – Gasoline Vehicles on page 1-3.**
2. Slightly loosen the lug nuts on the wheel to be removed.
3. Raise the end of the vehicle from which the wheel is to be removed. Make sure that the wheels are off the ground. **See General Warnings on page 1-1.**
4. Remove the lug nuts and remove the wheel.

WHEEL INSTALLATION

1. Install wheel(s) and tighten the lug nuts, using a crisscross pattern, until they are snug.
2. Lower the vehicle and finish tightening lug nuts, using a crisscross pattern, to 55 ft-lb (74.6 N·m).

TIRES

See General Warnings on page 1-1.

TIRE REMOVAL

NOTE: *Tire must be removed or installed from the valve stem side of the rim.*

1. Remove the tire and wheel assembly from the vehicle as instructed above.
2. Remove the valve cap and valve core and allow air to escape from the tire.
3. If possible, use a tire machine to remove the tire from the rim.
   3.1. If a tire machine is not available, loosen both tire beads by applying pressure to the tire side walls and pushing the tire bead away from the rim flange and into the rim well **(Figure 8-1, Page 8-2, Detail A)**.
   3.2. With the valve stem side of the wheel up, use a tire tool to carefully start the upper bead over the edge of the wheel rim **(Figure 8-1, Page 8-2, Detail B)**.

CAUTION

- **To avoid damage to the tire, do not use excessive force when starting the bead over the edge of the rim.**

4. When top bead is free of the rim, pull the bead from the bottom side of the rim up into the upper part of the rim well. Insert the tire tool under the lower bead as shown **(Figure 8-1, Page 8-2, Detail C)** and carefully pry the lower bead over the rim flange.
5. Once the lower bead is started over the rim flange, the tire can be removed from the rim by hand.

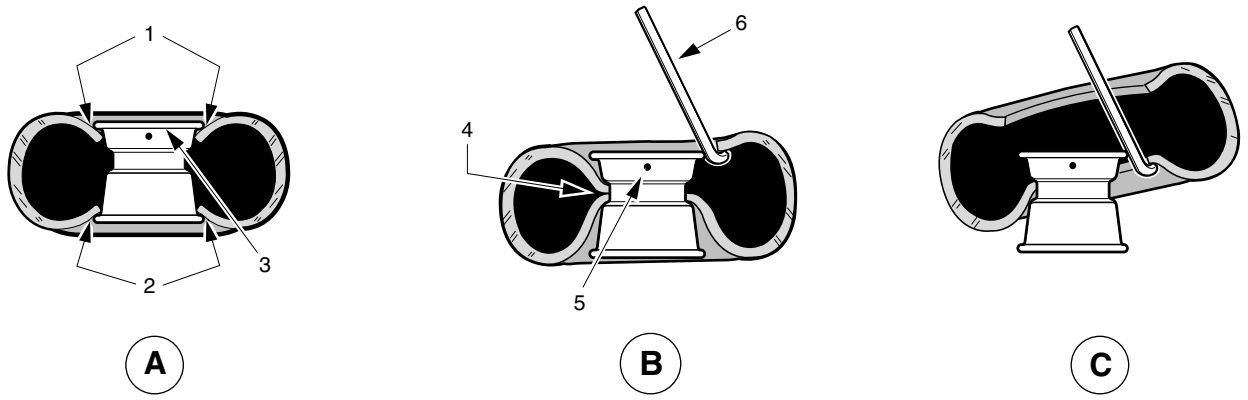

1. Upper Tire Beads 2. Lower Tire Beads 3. Rim Flange 4. Tire Beads Positioned In Rim Well 5. Valve Stem Side Up 6. Tire Tool

679

Figure 8-1 Tire Removal

TIRE REPAIR

1. Determine the location and cause of the air leak:
   1.1. Remove the wheel. **See Wheel Removal on page 8-1.** Inflate the tire to no more than 20 psi (1.38 Bars).
   1.2. Immerse the tire in water and then mark the point where bubbles are formed by escaping air.
   1.3. Determine the cause of the air leak. **See following NOTE.**

NOTE: *An air leak could be due to a punctured casing, faulty valve core, improperly seated valve stem, or improperly seated tire bead.*

Small holes in the casing can be plugged using a standard automotive tubeless tire repair kit available at your local Club Car dealer.

2. When the cause of the air leak has been determined, remove tire from the rim and repair as required. **See Tire Removal on page 8-2.**

TIRE INSTALLATION

⚠ WARNING

- **While mounting or inflating tire, keep hands, fingers, etc. from exposed areas between the tire bead and rim.**

1. Clean both tire beads to remove dirt or other foreign matter.
2. Where the tire beads seat, clean the wheel rim with a wire brush. Wipe away any debris with a clean cloth.

NOTE: *Because tubeless tires require a perfect seal in order to seat, keeping the tire and rim clean is very important.*

3. Apply a liberal amount of tire-mounting lubricant (soap and water solution) to both tire beads and rim flanges.
4. Install the tire on the rim from the valve stem side. If there is no tire machine available, use a rubber mallet and tire iron.
5. Remove the valve core, and position tire so that both beads are on the rim flange narrow bead seats.
6. Place tire and wheel assembly against wall in upright position and push it against wall while inflating tire to 30-35 psi (2.07-2.42 Bars). The three-point contact (wall, floor, and hand) will help ensure that beads snap into place and form a proper seal as tire is inflated **(Figure 8-2, Page 8-4)**. **See following WARNING.**

⚠ WARNING

- **Do not use a compressed air source with pressure over 100 psi (6.90 Bars). Due to low pressure requirements of a small tire, over-inflation could be reached almost instantly with a high pressure air supply. Over-inflation could cause tire to explode, possibly resulting in severe personal injury.**

7. Quickly remove the air nozzle and install the valve core.
8. Adjust air pressure in tire to recommended pressure. See Section 2 – Vehicle Specifications.
9. Immerse the wheel and tire assembly in water to make sure there are no leaks.

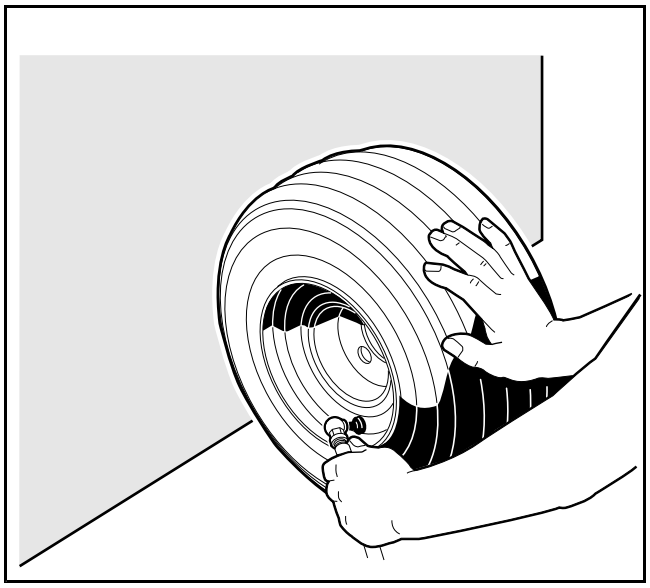

680

Figure 8-2 Inflate Tire

⚠ DANGER

- **See General Warnings on page 1-1.**

⚠ WARNING

- **See General Warnings on page 1-1.**

GENERAL INFORMATION

The rear suspension and powertrain of the vehicle move independently from the vehicle frame. It consists of two leaf springs controlled by two shock absorbers mounted between the springs and the vehicle frame.

SHOCK ABSORBERS

See General Warnings on page 1-1.

SHOCK ABSORBER REMOVAL AND INSPECTION

1. Check shock absorbers (7) for damage or fluid leakage at the point where the shaft enters the shock absorber body. Replace damaged or leaking shock absorbers **(Figure 9-3, Page 9-4 or Figure 9-4, Page 9-6)**.
2. To remove a shock absorber, remove the nut (5), cup washer (9) and rubber bushings (10) from the stem at the top of the shock absorber.
3. Remove the nut (5), cup washer (9), and rubber bushings (10) from lower mounting stem.
4. Compress the shock absorber to remove it.

SHOCK ABSORBER INSTALLATION

1. To install, reverse the removal procedure.
2. On the upper and lower shock absorber mounting stems, tighten the nuts until the rubber bushing expands to the size of the cup washer.

LEAF SPRINGS (TWO-PASSENGER VEHICLES)

See General Warnings on page 1-1.

LEAF SPRING REMOVAL (TWO-PASSENGER VEHICLES)

1. Disconnect the battery cables and discharge the controller as instructed. **See WARNINGS "To avoid unintentionally starting..." and "After disconnecting the batteries, wait 90 seconds..." in General Warnings on page 1-1.**
2. Loosen, but do not remove, lug nuts on tire and wheel assembly on the side from which the spring is to be removed. Place chocks at the front wheels and lift the rear of the vehicle with a chain hoist or floor jack. Position jack stands under the frame crossmember forward of the spring mounting tabs. Lower the vehicle to let the jack stands support the vehicle **(Figure 9-1, Page 9-3)**. **See following WARNING.**

⚠ WARNING

- **Lift only one end of the vehicle at a time. Use a suitable lifting device (chain hoist or hydraulic floor jack) with 1000 lb. (454 kg) minimum lifting capacity. Do not use lifting device to hold vehicle in raised position. Use approved jack stands of proper weight capacity to support the vehicle and chock the wheels that remain on the floor. When not performing a test or service procedure that requires movement of the wheels, lock the brakes.**

3. Place a floor jack under the transaxle differential casing to support, but not lift, the drivetrain. Raise it just enough to relieve tension on the shock absorbers without compressing them.
4. Remove the tire and wheel assembly on the side from which the spring is to be removed.
5. Remove the bow tie locking pin (1) and the clevis pin (2) at the brake lever and brake cable connection, and remove cable end (3) from the brake lever **(Figure 9-2, Page 9-3)**. Detach the brake cable from the shock mount bracket (4). **See Brake Cable Removal, Section 6, Page 6-13.**
6. Remove the nut (5), cup washer (9), and rubber bushings (10) from the lower mounting stem of the shock absorber **(Figure 9-3, Page 9-4)**.
7. Remove the nuts (13) and the U-bolt (11) securing the spring to the transaxle. Remove the shock mount bracket (15) and the U-bolt.
8. Remove the bolt (17) and nut (2) attaching the rear of the spring to the shackle (1).
9. Remove the nut (2) and bolt (17) attaching the front of the spring to the vehicle frame and remove the spring.
10. Inspect the bushings (4) and sleeves (3) in the spring eyes and replace them if they are worn or damaged.

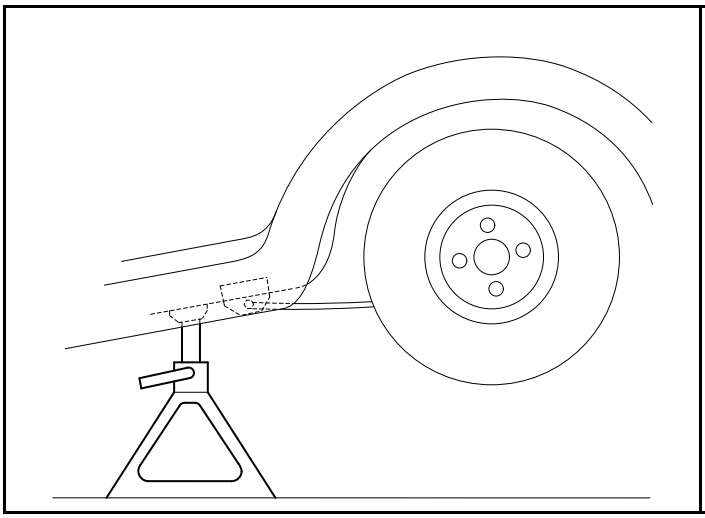

682

Figure 9-1 Support Vehicle on Jack Stands

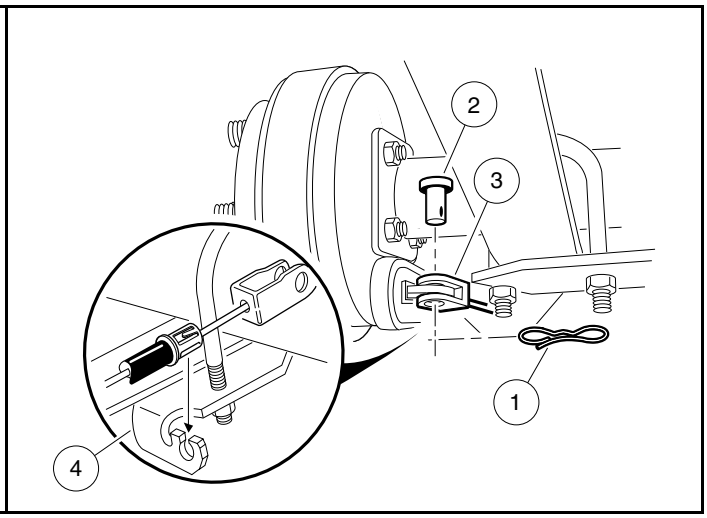

651

Figure 9-2 Disconnect Brake Cable

LEAF SPRING INSTALLATION (TWO-PASSENGER VEHICLES)

1. To install the springs, reverse the removal procedure. **See following CAUTION.**

⚠ CAUTION

- **When positioning the spring on the transaxle, be sure to insert the locating bolt on the spring in the locating hole in the transaxle saddle.**

2. Tighten the nuts on the U-bolts to 25 ft-lb (34 N·m) and tighten nuts (2) on spring mounting bolts (17) to 15 ft-lb (20.3 N·m) **(Figure 9-3, Page 9-4)**.
3. Install tire and wheel assembly. **See Wheel Installation, Section 8, Page 8-1.**

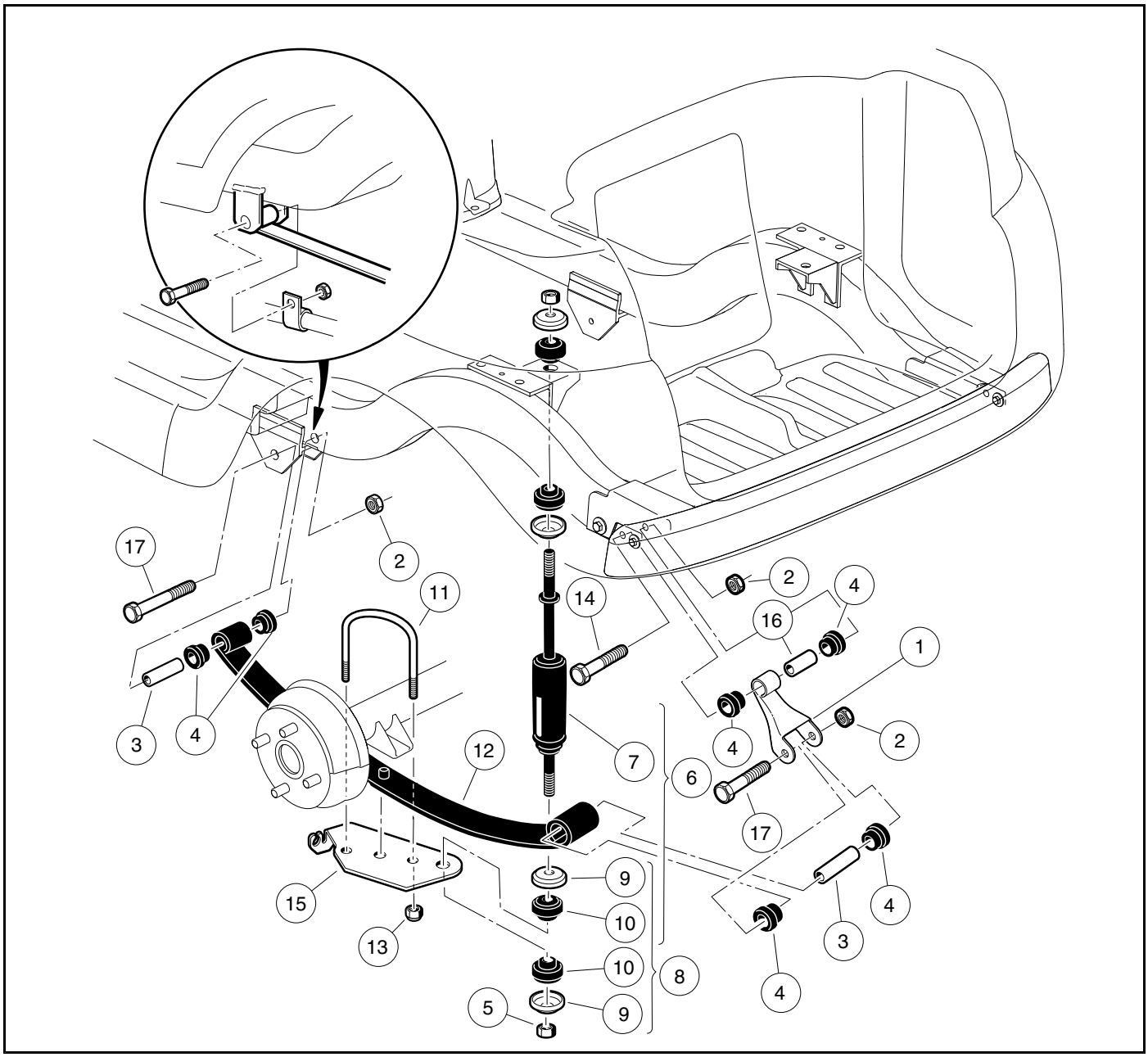

681

Figure 9-3 Rear Suspension Assembly and Mounting (Two-Passenger Vehicles)

LEAF SPRINGS (FOUR-PASSENGER VEHICLES)

See General Warnings on page 1-1.

LEAF SPRING REMOVAL (FOUR-PASSENGER VEHICLES)

1. Disconnect the battery cables and discharge the controller as instructed. **See WARNINGS "To avoid unintentionally starting..." and "After disconnecting the batteries, wait 90 seconds..." in General Warnings on page 1-1.**

2. Loosen, but do not remove, lug nuts on tire and wheel assembly on the side from which the spring is to be removed. Place chocks at the front wheels and lift the rear of the vehicle with a chain hoist or floor jack. Position jack stands under the frame crossmember forward of the spring mounting tabs. Lower the vehicle to let the jack stands support the vehicle **(Figure 9-1, Page 9-3)**. **See following WARNING.**

⚠ WARNING

- **Lift only one end of the vehicle at a time. Use a suitable lifting device (chain hoist or hydraulic floor jack) with 1000 lb. (454 kg) minimum lifting capacity. Do not use lifting device to hold vehicle in raised position. Use approved jack stands of proper weight capacity to support the vehicle and chock the wheels that remain on the floor. When not performing a test or service procedure that requires movement of the wheels, lock the brakes.**

3. Place a floor jack under the transaxle differential casing to support, but not lift, the drivetrain. Raise it just enough to relieve tension on the shock absorbers without compressing them.
4. Remove the tire and wheel assembly on the side from which the spring is to be removed.
5. Remove the bow tie locking pin (1) and the clevis pin (2) at the brake lever and brake cable connection, and remove cable end (3) from the brake lever **(Figure 9-2, Page 9-3)**. Detach the brake cable from the shock mount bracket (4). **See Brake Cable Removal, Section 6, Page 6-13.**
6. Remove the nut (5), cup washer (9), and rubber bushings (10) from the lower mounting stem of the shock absorber **(Figure 9-4, Page 9-6)**.
7. Remove the nuts (13) and the U-bolt (11) securing the spring and jounce bumper to the transaxle. Remove the shock mount bracket (15), jounce bumper bracket (20), and the U-bolt (11).
8. Remove the bolt (17) and nut (2) attaching the rear of the spring to the shackle (1).
9. Remove the nut (2) and bolt (17) attaching the front of the spring to the vehicle frame and remove the spring.
10. Inspect the bushings (4) and sleeves (3) in the spring eyes and replace them if they are worn or damaged.

LEAF SPRING INSTALLATION (FOUR-PASSENGER VEHICLES)

1. To install the springs, reverse the removal procedure. **See following CAUTION.**

⚠ CAUTION

- **When positioning the spring on the transaxle, be sure to insert the locating bolt on the spring in the locating hole in the transaxle saddle.**

2. Tighten the nuts on the U-bolts to 25 ft-lb (34 N·m) and tighten nuts (2) on spring mounting bolts (17) to 15 ft-lb (20.3 N·m) **(Figure 9-4, Page 9-6)**.
3. Install tire and wheel assembly. **See Wheel Installation, Section 8, Page 8-1.**

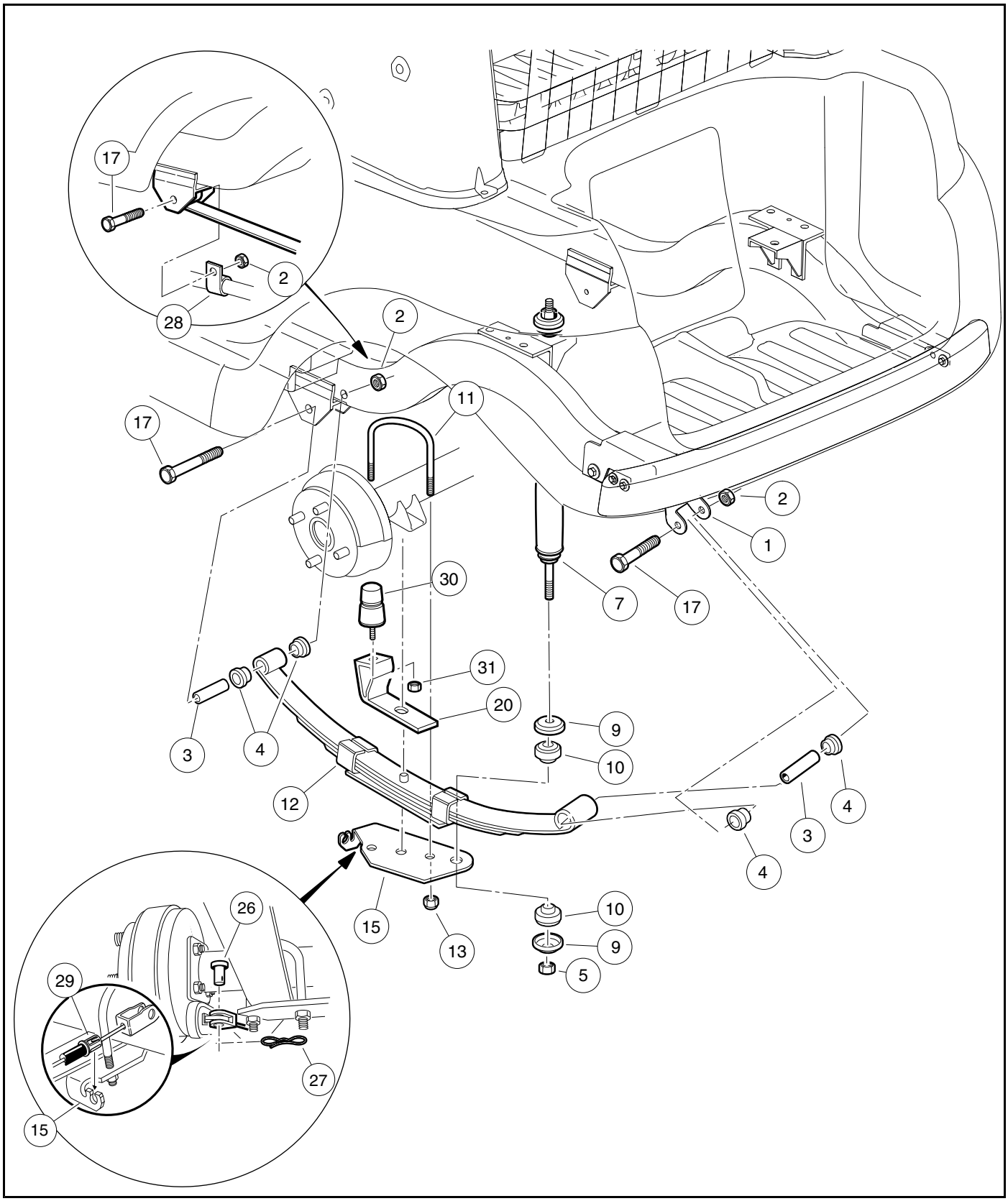

683

Figure 9-4 Rear Suspension Assembly and Mounting (Four-Passenger Vehicles)

GENERAL INFORMATION

To ensure trouble-free vehicle performance, it is very important to follow an established preventive maintenance program. Regular and consistent vehicle maintenance can prevent vehicle downtime and expensive repairs that can result from neglect. Use the Pre-Operation and Daily Safety Checklist, in the appropriate Owner's Manual, and the following Periodic Service Schedule and Periodic Lubrication Schedule to keep the vehicle in proper working condition.

Any vehicle not functioning correctly should be removed from use until it is properly repaired. This will prevent further damage to the vehicle and avoid the possibility of injury due to unsafe conditions.

Contact your local Club Car distributor/dealer to perform all repairs and semiannual and annual periodic service.

PERIODIC SERVICE SCHEDULES

⚠ WARNING

- **Service, repairs, and adjustments must be made per instructions in the maintenance and service manual.**
- **If any problems are found during scheduled inspection or service, do not operate the vehicle until repairs are made. Failure to make necessary repairs could result in fire, property damage, severe personal injury, or death.**

NOTE: *If the vehicle is constantly subjected to heavy use or severe operating conditions, the preventive maintenance procedures should be performed more often than recommended in the periodic service and lubrication schedules.*

Both the Periodic Service Schedule and the Periodic Lubrication Schedule must be followed to keep the vehicle in optimum operating condition.

PERIODIC SERVICE SCHEDULE – GASOLINE VEHICLES		
REGULAR INTERVAL	**SERVICE**	
Daily service by owner	Pre-Operation and Daily Safety Checklist	See Pre-Operation and Daily Safety Checklist in the appropriate Owner's Manual
	Performance Inspection	See Performance Inspection in the appropriate Owner's Manual

TABLE CONTINUED ON NEXT PAGE

PERIODIC SERVICE SCHEDULE – GASOLINE VEHICLES		
REGULAR INTERVAL	**SERVICE**	
Monthly service by owner or trained technician	Engine	Check engine oil level; change if necessary. Properly dispose of used oil. **See Periodic Lubrication Schedules on page 10-3.**
		Check engine cooling air intake; clean if necessary. Visually inspect the unshrouded area around engine exhaust for grass and debris, and clean if necessary.
	Tires	Check air pressure and adjust as necessary. See Section 2 – Vehicle Specifications.
	General vehicle	Wash engine compartment and underside of vehicle. Do not wash engine when hot.
Semiannual service by trained technician only (every 50 hours of operation or every 100 rounds of golf)	Battery	Clean terminals and wash dirt from casing; Apply Battery Terminal Protector Spray (P/N 1014305) to battery terminals; check electrolyte level. **See Battery on page 13-40.**
	Front wheel alignment and camber	Check and adjust if necessary. See Section 7 – Steering and Front Suspension.
	Electrical wiring and connections	Check for tightness and damage; replace if necessary.
	Brake system	Check brake shoes; replace if necessary.
		Lubricate brake system per Lubrication Schedule.
		Check brake cables for damage; replace if necessary.
		Check brake cable equalizer adjustment; adjust if necessary.
Annual service by trained technician only (every 100 hours of operation or every 200 rounds of golf)	Engine	Check for leaks around gaskets, fill plugs, etc.
		Inspect, clean and regap spark plug; replace if necessary.
	Engine air intake system	Check air filter element; replace if necessary.
		Check clamps for tightness; check hose for cracks.
	Pedal group	Lubricate all rotating joints. **See Periodic Lubrication Schedules on page 10-3.**
	General vehicle	Check for loose hardware; tighten if necessary. Refer to the appropriate maintenance and service manual.
Two year service by trained technician only (every 200 hours of operation or every 400 rounds of golf)	Fuel filters	Replace. Dispose of used filters properly.

PERIODIC LUBRICATION SCHEDULES

PERIODIC LUBRICATION SCHEDULE – GASOLINE VEHICLES			
REGULAR INTERVAL	**SERVICE**	**LUBRICATION POINTS**	**RECOMMENDED LUBRICANT**
Semiannually by owner or trained technician (every 50 hours of operation or every 100 rounds of golf)	Shifter cable pivots	1	Dry Moly Lube (P/N 1012151)
	Brake system, per maintenance and service manual.	2	Dry Moly Lube (P/N 1012151), white lithium grease NLGI #2
	Front suspension (two fittings)	3	Chassis Lube - EP NLGI Grade 2
Annually by trained technician only (every 100 hours of operation or every 200 rounds of golf)	Check/fill unitized transaxle to plug level	4	27 oz. (0.8 liter) 80-90 WT. API Class GL-3 or 80-90 WT. AGMA Class EP Gear Lube
	Pedal group (as required)	5	Dupont™ Performance Dry Multi-Use Lubricant
First change 100 hours – additional change every 200 hours of operation (or every 400 rounds of golf), or annually, whichever comes first	Change engine oil and oil filter (dispose of properly)	6	32 oz. (0.95 liter) without filter; 38 oz. (1.12 liters) with filter

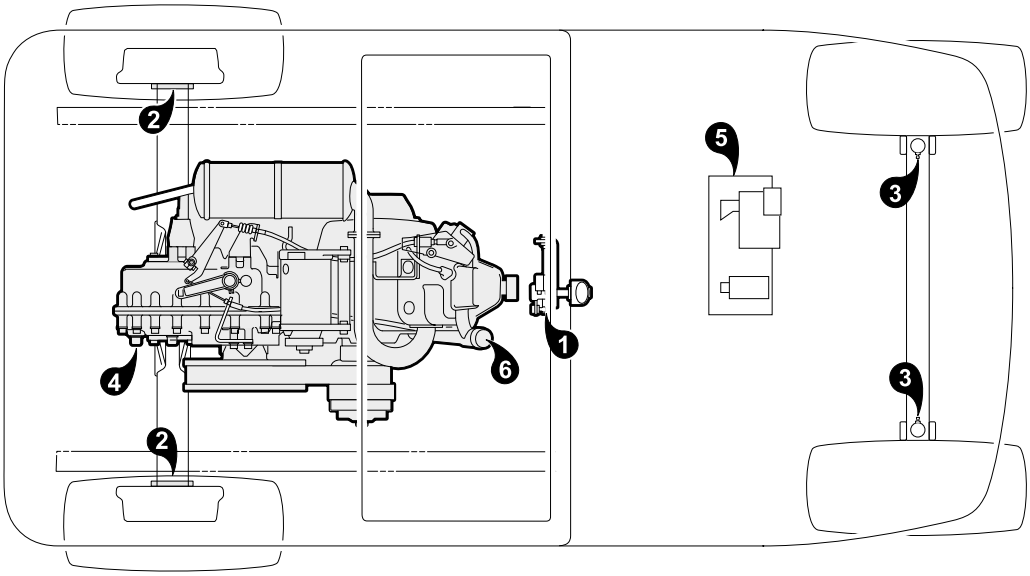

65

Figure 10-1 Lubrication Points – Gasoline Vehicles

ENGINE OIL

ENGINE OIL LEVEL CHECK

1. Remove the oil level dipstick from the oil filler tube, and wipe oil off dipstick (1) **(Figure 10-2)**. **See following CAUTION.**

CAUTION

- **Do not remove dipstick while engine is running.**

2. Check oil by fully inserting the dipstick into the oil filler tube (2) and immediately removing it.
3. If the oil level is at or below the low level mark on the dipstick gauge, add oil until the level is between low and full levels (safe level) (3).
4. Insert the dipstick into the oil filler tube. **See following NOTE.**

NOTE: *Properly recycle or dispose of used oil in accordance with the environmental laws and regulations for your area.*

Even though the low oil warning light on the dash should warn you if your oil becomes low, engine oil level should be checked monthly. Vehicle should be on a level surface when checking oil. Do not overfill with oil.

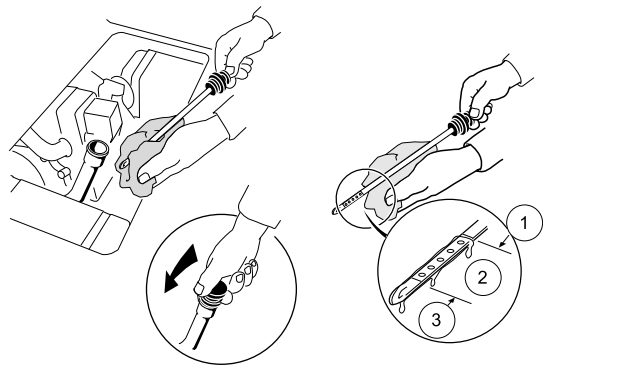

1. Full level 2. Safe level 3. Low level

23

Figure 10-2 Engine Oil Level Check

ENGINE OIL AND FILTER CHANGE

Engine oil and oil filter should be changed after the first 100 hours of operation. After that, they should be changed every 200 hours of operation or annually, whichever comes first.

1. Turn the key switch to the OFF position, then remove the key. Place the Forward/Reverse handle in the NEUTRAL position. Chock the front wheels.
2. Access the engine compartment.
3. Disconnect battery and spark plug wire(s). **See Disconnecting the Battery – Gasoline Vehicles on page 1-3.**
4. Position a pan designed for oil changes under the front drain plug **(Figure 10-3)**.

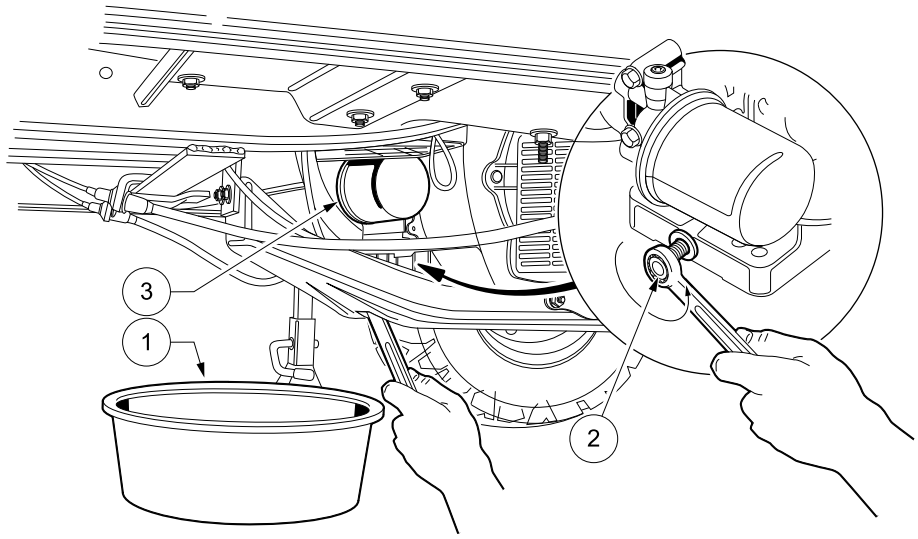

1. Drain pan 2. Drain plug 3. Oil filter

25

Figure 10-3 Engine Oil Drain Plug and Pan

5. Use a 14 mm socket or wrench to remove the drain plug, turning it counterclockwise, and allow the engine oil to drain into the pan. **See following WARNING.**

⚠ WARNING

- **Do not attempt to change engine oil when the engine is hot or even warm. Engine oil can cause skin burns.**
- **Wear safety glasses or approved eye protection when servicing the vehicle. Wear rubber gloves when handling oil drain plug, oil filter, and oil drain pan.**

6. Clean the oil drain plug threads with solvent to remove oil and oil residue. Make sure that the compression washer remains on the drain plug.
7. Use a 14 mm socket or wrench and replace the front oil drain plug, turning it clockwise, and tighten to 18 ft-lb (24.4 N·m).
8. Relocate the oil drain pan to a position under the engine oil filter **(Figure 10-3)**.
9. Remove the engine oil filter, turning it counterclockwise, allowing the residual oil in the filter port and filter to drain into the oil drain pan **(Figure 10-4)**. **See following NOTE.**

NOTE: *An oil drip guard can be used to prevent excess oil from dripping into the engine base plate. Use an empty quart (one liter) container and cut the bottom off at an angle, then slide the open area of the container up and under the oil filter prior to removing. Position the port of the plastic container so oil will be directed into the oil pan. Or, make a drip guard by folding a piece of cardboard, thin metal, or plastic under the oil filter forming a channel to direct the filter port oil into the drain pan.*

Dispose of used oil according to the environmental laws and regulations for your area.

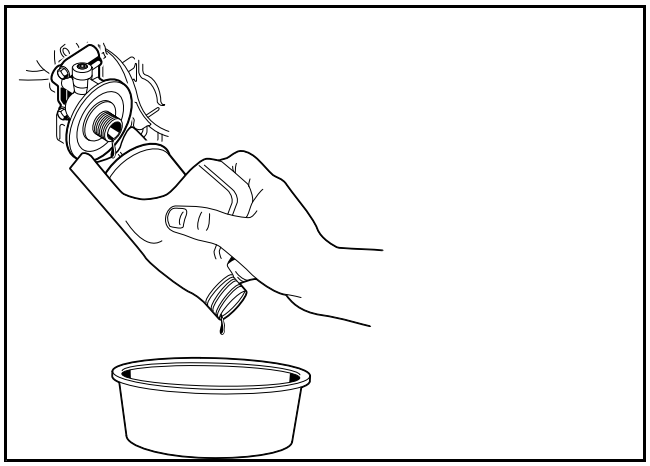

26

Figure 10-4 Remove Engine Oil Filter

10. Use a clean rag and wipe the oil filter mounting bracket surface clean where the oil filter gasket seats.
11. Coat new oil filter gasket with clean engine oil and install the oil filter onto the engine oil filter port **(Figure 10-5)**.

NOTE: *Use only Club Car oil filters (P/N 1016467) designed for this engine.*

12. Hand tighten 2/3 to 3/4 turn after filter gasket contacts mounting surface.
13. Remove the dipstick and add engine oil into the dipstick port. Use a funnel or pour spout to direct the oil into the dipstick port. With filter change, the engine requires 38 ounces (1.12 liters) of oil per change. Refer to oil viscosity guidelines for selection of oil grade **(Figure 10-6)**. Replace the dipstick.
14. Connect battery and spark plug wire(s). **See Connecting the Battery – Gasoline Vehicles on page 1-3.**
15. With the Forward/Reverse handle in the NEUTRAL position, run engine for 3 minutes and check for leaks. Observe both the drain plug and the oil filter from under the vehicle and watch for oil leaks. If filter leaks, tighten additional 1/4 turn and retest, if oil drain plug leaks, re-torque and retest.
16. Remove the dip stick and check the engine oil as a final step. Replace the dip stick.

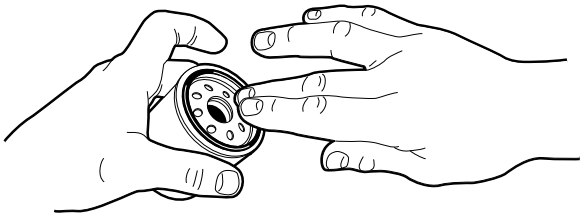

27

Figure 10-5 Coat Oil Filter Rubber Seal

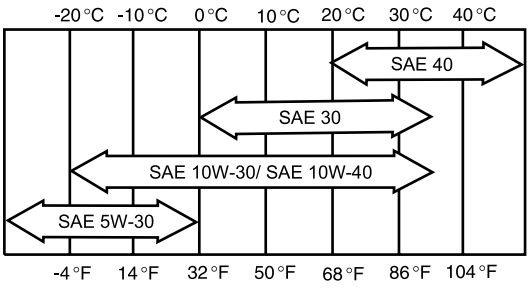

213

Figure 10-6 Oil Viscosity Chart

BATTERY – GASOLINE VEHICLES

For periodic battery maintenance, see Battery on page 13-40.

⚠ DANGER

- **See General Warnings on page 1-1.**

⚠ WARNING

- **See General Warnings on page 1-1.**

GENERAL INFORMATION

This section contains the information required to correctly troubleshoot the vehicle. A troubleshooting guide is provided for general troubleshooting. In addition to troubleshooting, this section contains general information on the electrical system and the circuits of the electrical system.

TROUBLESHOOTING GUIDE

The following troubleshooting guide will be helpful in identifying operating difficulties should they occur. The guide includes the symptom, probable cause(s) and suggested checks. The procedures used in making these checks can be found in the referenced sections in this maintenance and service manual.

TROUBLESHOOTING GUIDE		
SYMPTOM	**POSSIBLE CAUSES**	**REFER TO**
Engine does not start easily.	Spark plug is partially fouled or in poor condition	See Section 14 – AS11 FE 350 Engine.
	Spark plug wire is damaged or loose	See Section 14 – AS11 FE 350 Engine.
	Loose wire connection at ignition coil or RPM limiter	See Section 11 – Troubleshooting and Electrical System – GCOR. Test Procedures 13 – *Ignition Spark*, 14 – *RPM Limiter* and 15 – *Ignition Coil*
	Intermittent ignition coil failure	See Section 11 – Troubleshooting and Electrical System – GCOR. Test Procedures 13 – *Ignition Spark*, 14 – *RPM Limiter* and 15 – *Ignition Coil*
	Low cylinder compression	See Section 14 – AS11 FE 350 Engine.
	Water or dirt in the fuel system and/or carburetor; dirty or clogged fuel filter	See Section 16 – Fuel System.
	Carburetor improperly adjusted	See Section 16 – Fuel System.
	Starter/generator belt is slipping	Belt Tension Adjustment on page 13-23

TABLE CONTINUED ON NEXT PAGE

TROUBLESHOOTING GUIDE		
SYMPTOM	**POSSIBLE CAUSES**	**REFER TO**
Engine starts but does not run smoothly.	Spark plug is fouled or in poor condition	See Section 14 – AS11 FE 350 Engine.
	Spark plug wire is damaged or loose	See Section 14 – AS11 FE 350 Engine.
	Intermittent ignition coil failure	See Section 11 – Troubleshooting and Electrical System – GCOR. Test Procedures 13 – *Ignition Spark*, 14 – *RPM Limiter* and 15 – *Ignition Coil*
	Water or dirt in the fuel system and/or carburetor; dirty or clogged fuel filter	See Section 16 – Fuel System.
	Fuel pump malfunction; fuel pressure to carburetor too low	See Section 16 – Fuel System.
Engine turns but fails to start.	Fuel tank is empty	See Section 16 – Fuel System.
	Fuel line or filters clogged	See Section 16 – Fuel System.
	Fouled spark plug	See Section 14 – AS11 FE 350 Engine.
	Spark plug wire damaged or loose	See Section 14 – AS11 FE 350 Engine.
	Loose wire connection at ignition coil or RPM limiter	See Section 11 – Troubleshooting and Electrical System – GCOR. Test Procedures 13 – *Ignition Spark*, 14 – *RPM Limiter* and 15 – *Ignition Coil*
	Ignition coil or RPM limiter failed	See Section 11 – Troubleshooting and Electrical System – GCOR. Test Procedures 13 – *Ignition Spark*, 14 – *RPM Limiter* and 15 – *Ignition Coil*
	Engine flooded with fuel as result of excess choking	Refer to the appropriate owner's manual. See Choke.
	Kill circuit grounded	See Section 11 – Troubleshooting and Electrical System – GCOR. Test Procedures 5 – *GCOR*, 17 – *Key Switch (Engine Kill Circuit)*, 18 – *Engine Kill Wire*
	Fuel pump malfunction or failure	See Section 16 – Fuel System.
Engine overheats.	Fan screen is partially blocked or plugged	See Section 14 – AS11 FE 350 Engine.
	Governor is improperly adjusted	See Section 16 – Fuel System.
	Carburetor is too lean; check main jet size	See Section 16 – Fuel System.
Engine pre-ignites.	Excessive carbon deposits on piston head or in combustion chamber	See Section 14 – AS11 FE 350 Engine.
	Spark plug heat range is incorrect	See Section 14 – AS11 FE 350 Engine.
	Unsuitable or contaminated fuel	See Section 16 – Fuel System.

TABLE CONTINUED ON NEXT PAGE

TROUBLESHOOTING GUIDE		
SYMPTOM	**POSSIBLE CAUSES**	**REFER TO**
Loss of engine power.	Exhaust valve is restricted with carbon deposit	See Section 14 – AS11 FE 350 Engine.
	Muffler or exhaust pipe restricted with carbon or other substance	See Section 17 – Exhaust System.
	Ignition coil failed	See Section 11 – Troubleshooting and Electrical System – GCOR. Test Procedures 13 – *Ignition Spark*, 14 – *RPM Limiter* and 15 – *Ignition Coil*
	Air filter is dirty or clogged	See Section 16 – Fuel System.
	Governor is improperly adjusted	See Section 16 – Fuel System.
	Throttle linkage out of adjustment	See Section 16 – Fuel System.
	Low cylinder compression	See Section 14 – AS11 FE 350 Engine.
	Spark plug failed	See Section 14 – AS11 FE 350 Engine.
	Restricted fuel flow	See Section 16 – Fuel System.
	Torque converter is not backshifting properly	See Section 19 – Torque Converter: Gasoline Vehicle.
Spark plug fouls repeatedly.	Incorrect plug	See Section 14 – AS11 FE 350 Engine.
	Spark plug wire is damaged	See Section 14 – AS11 FE 350 Engine.
	Unsuitable fuel, or incorrect (rich) fuel mixture	See Section 16 – Fuel System.
	Ignition coil failed	See Section 11 – Troubleshooting and Electrical System – GCOR. Test Procedures 13 – *Ignition Spark*, 14 – *RPM Limiter* and 15 – *Ignition Coil*
	Dirt entering combustion chamber	Check intake system for leaks. See Section 16 – Fuel System.
	Rings are heavily worn, low cylinder pressure	See Section 14 – AS11 FE 350 Engine.
Carburetor floods.	Inlet valve or seat is leaking, dirty, worn, or damaged	See Section 16 – Fuel System.
	Float is damaged and filled with fuel	See Section 16 – Fuel System.
	Float needle valve not functioning properly	See Section 16 – Fuel System.
	Carburetor vent is clogged	See Section 16 – Fuel System.

TABLE CONTINUED ON NEXT PAGE

TROUBLESHOOTING GUIDE		
SYMPTOM	**POSSIBLE CAUSES**	**REFER TO**
Starter fails to operate.	Neutral lockout cam is in the wrong position	Test Procedure 7 – Neutral Lockout Limit Switch on page 11-19
	Fuse is blown	Test Procedure 2 – Fuse on page 11-14
	Battery is dead	Test Procedure 1 – Battery on page 11-12
	Starter control circuit is not operating	Test Procedure 8 – Starter/Generator (Starter Function) on page 11-20
	Starter/generator failed	Test Procedure 8 – Starter/Generator (Starter Function) on page 11-20
	Starter solenoid failed	Test Procedure 6 – Solenoid on page 11-18
	GCOR failed	Test Procedure 5 – GCOR on page 11-17
	Key switch failed	Test Procedure 4 – Key Switch (Starter Circuit) on page 11-16
	Neutral lockout limit switch failed	Test Procedure 7 – Neutral Lockout Limit Switch on page 11-19
	Loose or broken wire in starter/generator circuit	See Section 13 – Electrical Components.
	Cylinder and/or crankcase flooded with fuel	See Section 16 – Fuel System.
Starter/Generator does not charge battery.	Loose or broken wire in starter/generator circuit	Test Procedure 10 – Starter/Generator (Generator Function) on page 11-21
	Generator field coil is shorted	Test Procedure 10 – Starter/Generator (Generator Function) on page 11-21
	Brushes are worn or commutator is dirty	See Section 13 – Electrical Components.
	Starter/generator belt is loose or slipping	Belt Tension Adjustment on page 13-23
	Voltage regulator failed	Test Procedure 11 – Voltage Regulator on page 11-22
	Battery failed	Test Procedure 1 – Battery on page 11-12
Transmission does not engage or disengage smoothly.	Transmission shifter linkage is binding or is out of adjustment	See Section 18 – Unitized Transaxle.
	Idle RPM setting is set too high	See Section 16 – Fuel System.
	Insufficient (low) level of lubricant or wrong type of lubricant in transmission	See Section 18 – Unitized Transaxle.
	Internal gears are damaged or worn	See Section 18 – Unitized Transaxle.
	Synchronizer rings are worn, damaged or jammed	See Section 18 – Unitized Transaxle.

TABLE CONTINUED ON NEXT PAGE

TROUBLESHOOTING GUIDE		
SYMPTOM	**POSSIBLE CAUSES**	**REFER TO**
Excessive vehicle vibration.	Engine mounting nuts or bolts are loose	See Section 14 – AS11 FE 350 Engine.
	Snubber on frame is worn or damaged	See Section 14 – AS11 FE 350 Engine.
	Misaligned muffler mounting clamp	See Section 17 – Exhaust System.
	Damaged drive belt or starter belt	See Section 19 – Torque Converter: Gasoline Vehicle.
	Damaged drive clutch	See Section 19 – Torque Converter: Gasoline Vehicle.
	Damaged driven clutch	See Section 19 – Torque Converter: Gasoline Vehicle.
	Damaged starter/generator pulley	See Section 13 – Electrical Components.
	RPM setting is incorrect	Engine RPM Adjustment on page 16-8
Torque converter does not shift smoothly.	Drive belt is worn, cracked, glazed, or frayed	See Section 19 – Torque Converter: Gasoline Vehicle.
	Drive clutch malfunction	See Section 19 – Torque Converter: Gasoline Vehicle.
	Driven clutch malfunction	See Section 19 – Torque Converter: Gasoline Vehicle.
	Governor is sticking	See Section 18 – Unitized Transaxle.
Engine won't stop running.	Kill circuit wire is disconnected from the ignition coil	Test Procedure 12 – Disconnected Kill Wire on page 11-23
	Key switch failure	See Section 11 – Troubleshooting and Electrical System – GCOR. Test Procedures 4 – *Key Switch (Starter Circuit)* and 5 – *GCOR*
	Carburetor is too lean; check main and pilot jet sizes	See Section 16 – Fuel System.
	Carburetor throttle stop screw out of adjustment	See Section 16 – Fuel System.

WIRING DIAGRAMS – GCOR

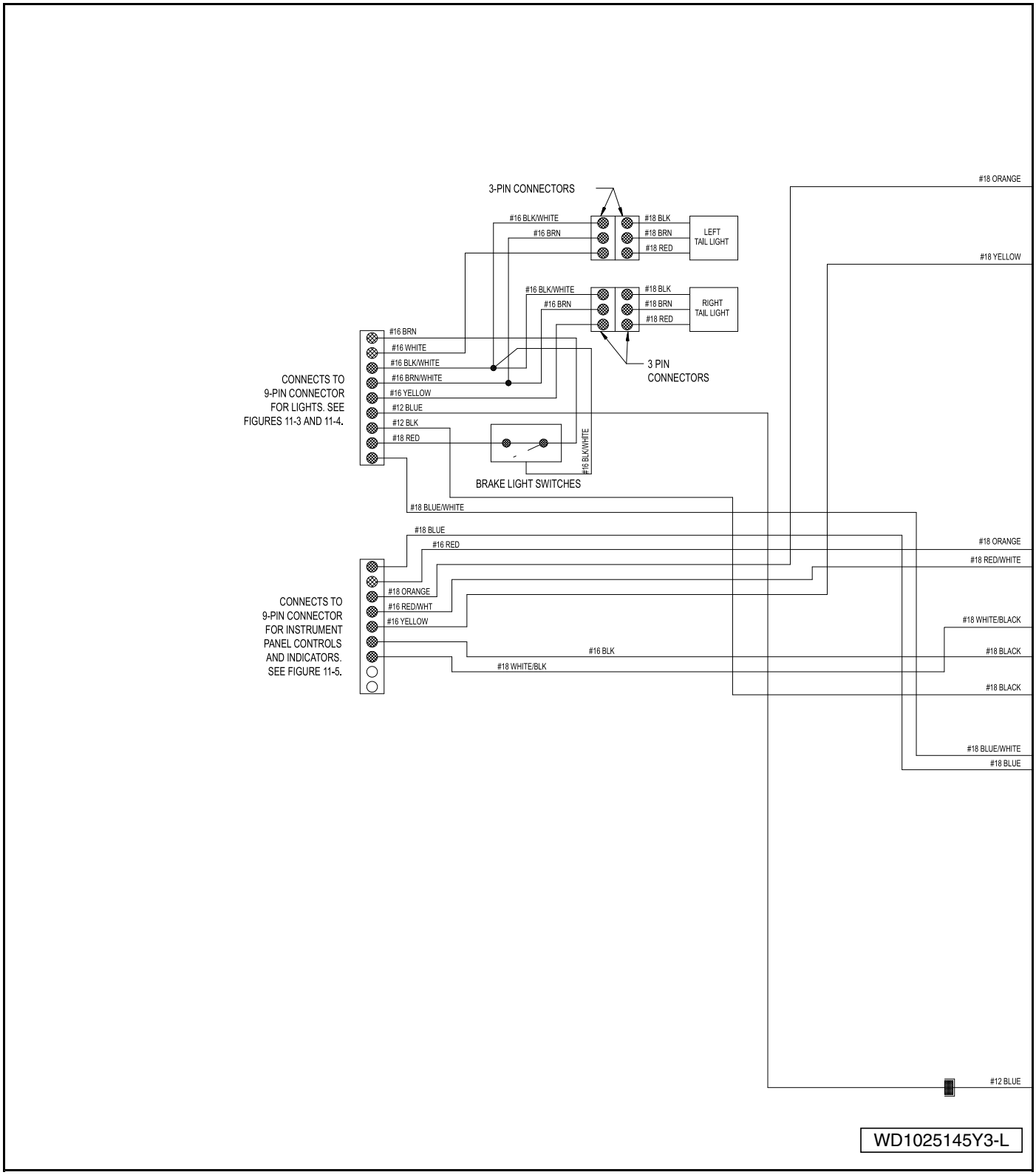

Figure 11-1 Wiring Diagram – Precedent Gasoline Vehicle with GCOR

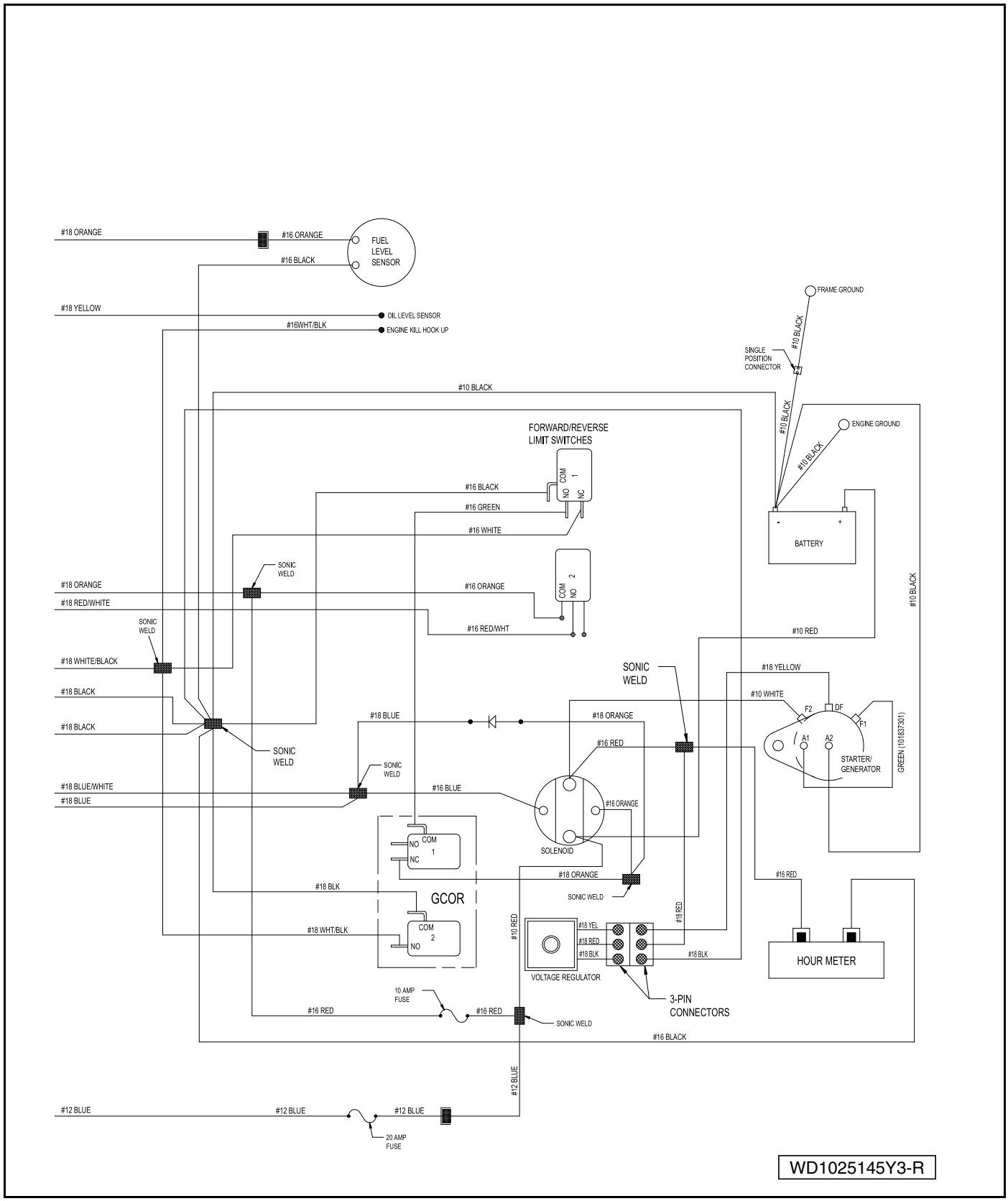

Figure 11-2 Wiring Diagram – Precedent Gasoline Vehicle with GCOR

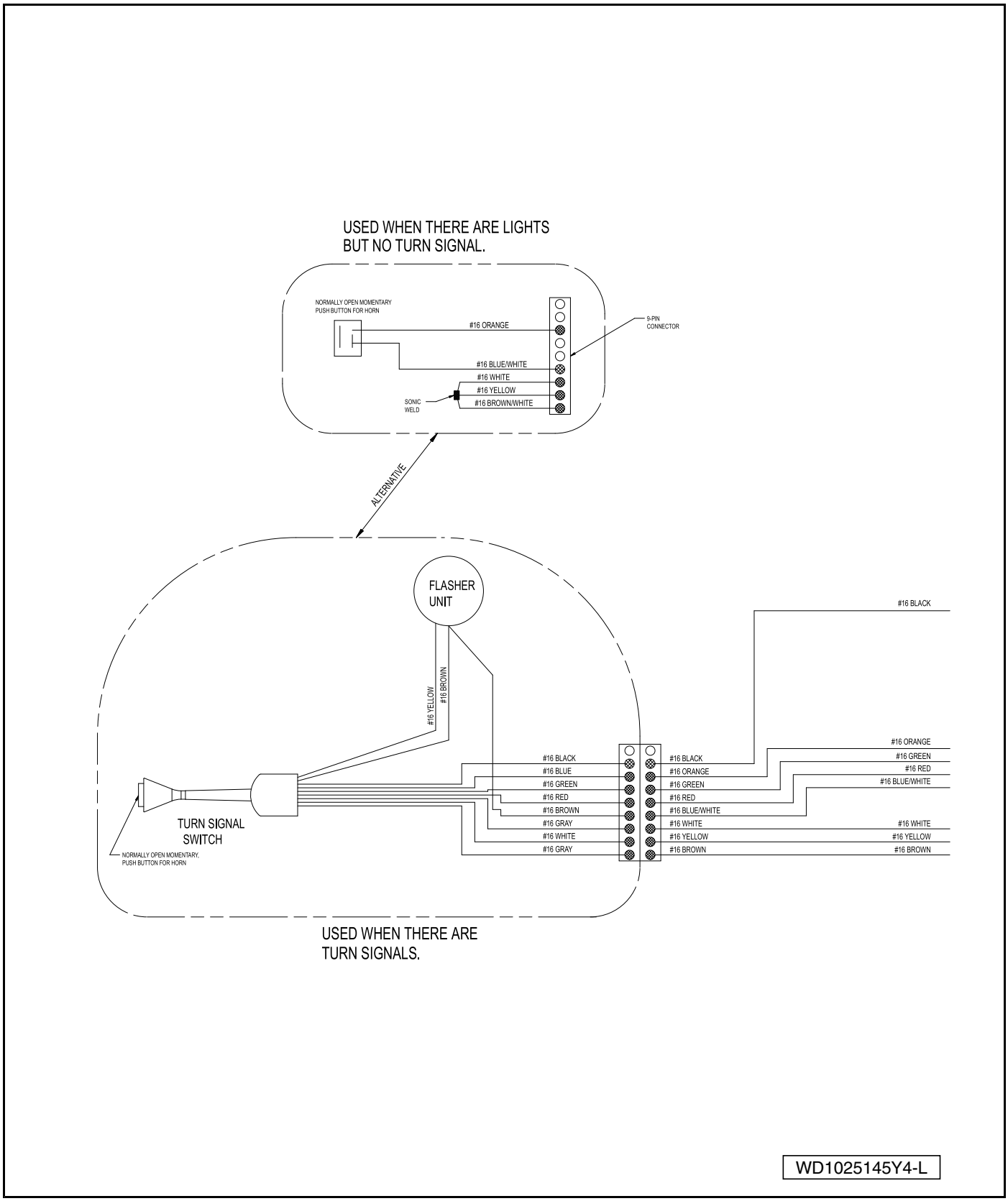

Figure 11-3 Precedent Gasoline Vehicle Accessory Wiring Diagram (Optional)

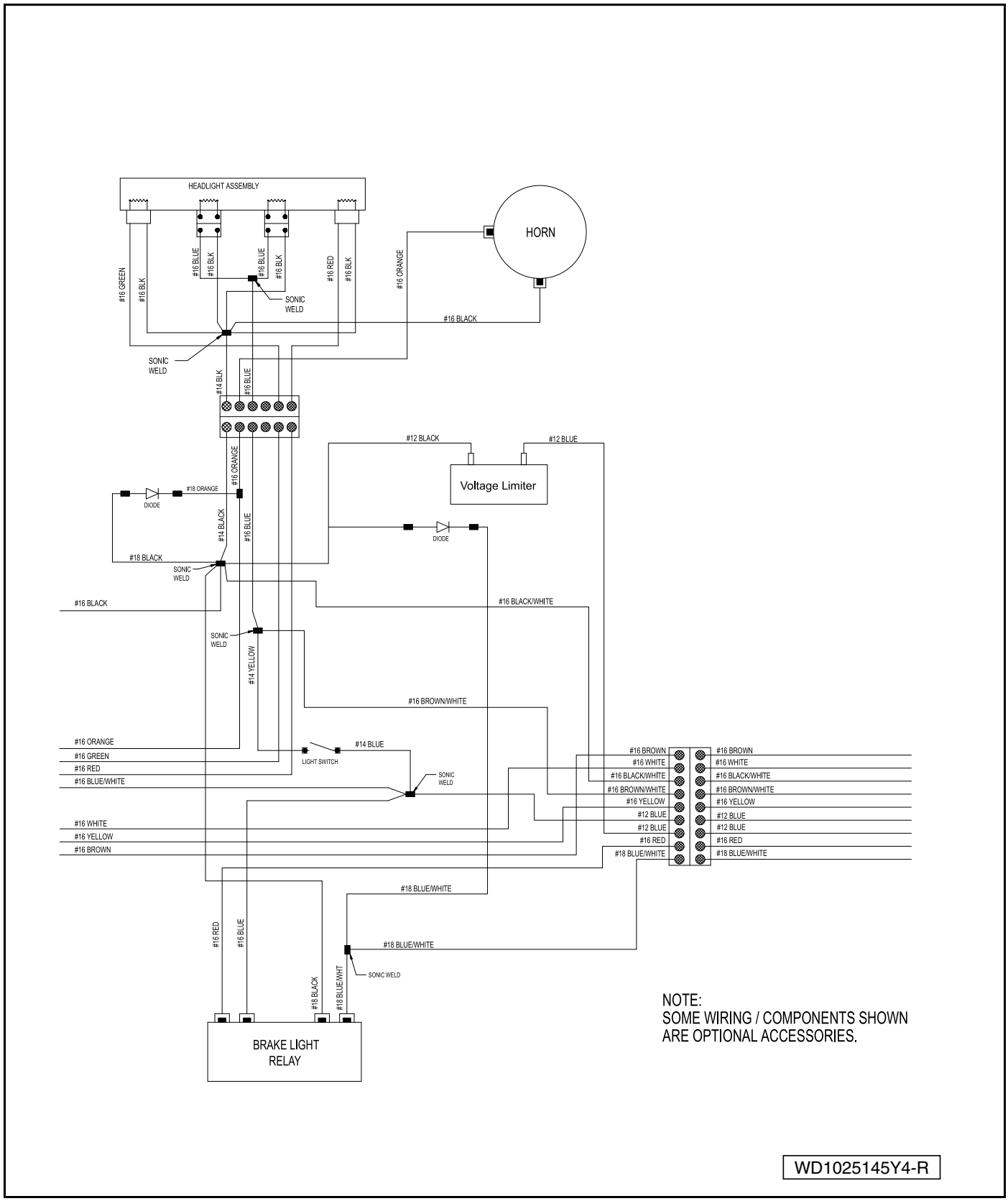

Figure 11-4 Precedent Gasoline Vehicle Accessory Wiring Diagram (Optional)

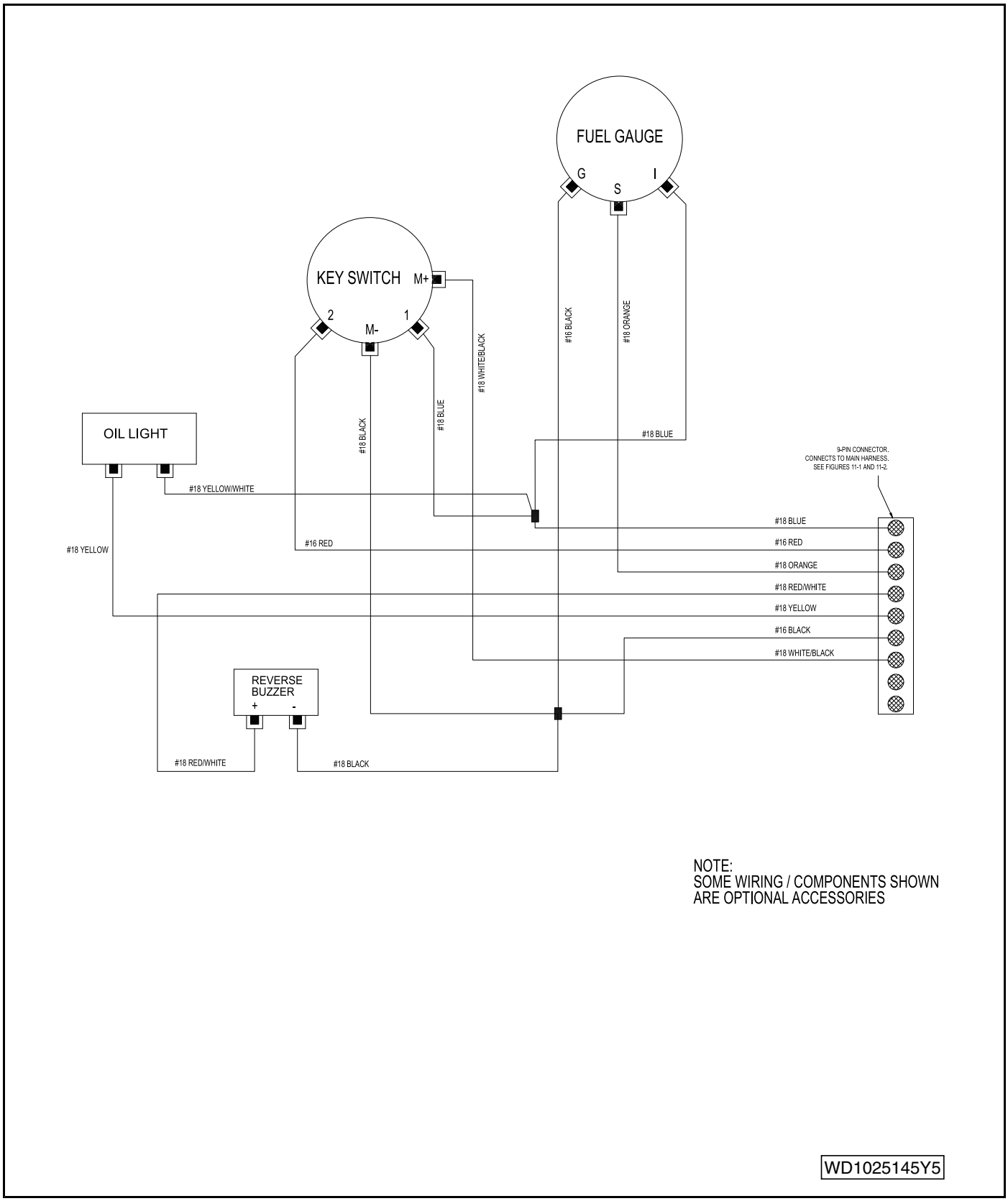

Figure 11-5 Precedent Gasoline Vehicle Instrument Panel Wiring Diagram

ELECTRICAL SYSTEM

The electrical system on the gasoline vehicle is 12 volts DC with negative (–) ground to frame, and consists of nine circuits that are easily identified:

- Starter Circuit
- Generator Circuit
- Engine Ignition Circuit
- Engine Kill Circuit
- Reverse Buzzer Circuit
- Low Oil Warning Light Circuit
- Neutral Lockout Circuit
- Fuel Gauge and Sending Unit Circuit
- Hour Meter Circuit

Recognizing and understanding the function of each of these circuits will help to quickly isolate the source of an electrical problem. Use the troubleshooting flow charts in the circuit testing section to find the proper test procedure to correct the electrical problem.

TEST PROCEDURES

Index of Test Procedures

1 – Battery
2 – Fuse
3 – Ground Cables
4 – Key Switch (Starter Circuit)
5 – GCOR
6 – Solenoid
7 – Neutral Lockout Limit Switch
8 – Starter/Generator (Starter Function)
9 – Wire Continuity
10 – Starter/Generator (Generator Function)
11 – Voltage Regulator
12 – Disconnected Kill Wire
13 – Ignition Spark
14 – RPM Limiter
15 – Ignition Coil
16 – Hour Meter
17 – Key Switch (Engine Kill Circuit)
18 – Engine Kill Wire
19 – Reverse Buzzer Limit Switch
20 – Reverse Buzzer
21 – Oil Level Sensor
22 – Low Oil Warning Light
23 – Neutral Lockout Cam
24 – Battery Test (Under Load)

25 – Fuel Level Sending Unit
26 – Fuel Gauge

TEST PROCEDURE 1 – Battery

See General Warnings on page 1-1.

⚠ DANGER

- **Due to the danger of an exploding battery, wear a full face shield and rubber gloves when working around a battery.**
- **Battery – Explosive gases! Do not smoke. Keep sparks and flames away from the vehicle and service area. Ventilate when charging or operating vehicle in an enclosed area. Wear a full face shield and rubber gloves when working on or near batteries.**
- **Battery – Poison! Contains acid! Causes severe burns. Avoid contact with skin, eyes, or clothing. Antidotes:**
  - **External: Flush with water. Call a physician immediately.**
  - **Internal: Drink large quantities of milk or water. Follow with milk of magnesia or vegetable oil. Call a physician immediately.**
  - **Eyes: Flush with water for 15 minutes. Call a physician immediately.**

NOTE: *The battery must be properly maintained and fully charged in order to perform the following test procedures. Battery maintenance procedures, including watering information and allowable mineral content, can be found in the Electrical Components section of this manual.* ***See Battery on page 13-40.***

1. Place the neutral lockout cam in the MAINTENANCE position, put the Forward/Reverse handle in the NEUTRAL position, and chock the wheels.
2. Check for loose or corroded battery terminal connections. Remove the negative (–) cable first and clean, tighten, and replace connections as necessary.

Hydrometer Test

A hydrometer (P/N 1011478) measures the specific gravity. The greater the specific gravity, the greater the state of charge of the battery. A fully charged battery should read between 1.250 and 1.280 at 80 °F (27 °C). Never add acid to the battery to obtain a higher specific gravity **(Figure 11-7, Page 11-13)**.

⚠ CAUTION

- **Do not allow battery acid from battery caps or hydrometer to drip onto the body. Battery acid will cause permanent damage. Wash off immediately.**

Performing the Hydrometer Test

1. Be sure that the battery has sufficient water to cover the plates by approximately 1/2 inch (12.7 mm) and is fully charged prior to beginning the test. If water must be added, recharge the battery before performing the hydrometer test **(Figure 11-6, Page 11-13)**.
2. Remove the vent cap.
3. Using a battery thermometer (P/N 1011767), record the electrolyte temperature of a center cell.

4. Squeeze the rubber bulb of the hydrometer and insert into the cell. Slowly release the bulb, drawing electrolyte up into the glass tube of the hydrometer.
5. When the float rises off the bottom, adjust the electrolyte level so that the float rides free of the bottom but does not strike the bottom of the rubber bulb. Remove the hydrometer from the cell and release the pressure from the bulb.
6. Hold the hydrometer vertically, ensuring that the float is not contacting the sides of the glass tube. Hold the hydrometer at eye level and read the scale at the level of electrolyte **(Figure 11-7, Page 11-13)**.
7. Record the reading.
8. Return the electrolyte to the cell from which it was taken. Replace vent cap.
9. Repeat steps 2 through 8 on all cells.

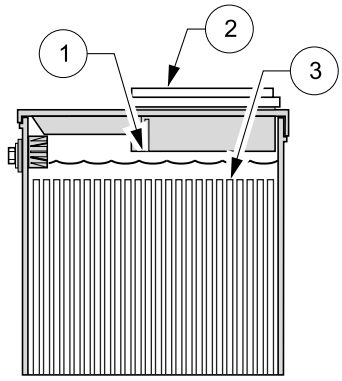

22

Figure 11-6 Battery Electrolyte Level

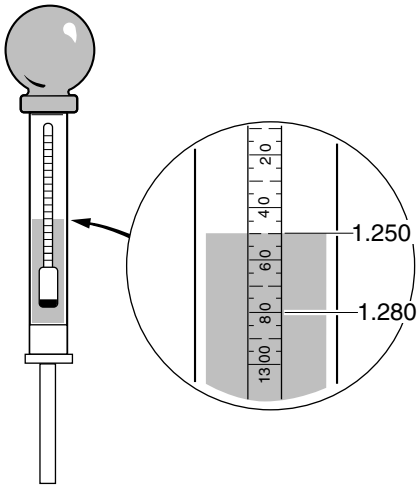

717

Figure 11-7 Hydrometer Test

Hydrometer Calibration

Most hydrometers are calibrated to read correctly at 80 °F (27 °C). The readings obtained as described above must be corrected for temperature. For each 10 °F (5.6 °C) above 80 °F (27 °C), add 0.004 to the reading. For each 10 °F (5.6 °C) below 80°F (27 °C), subtract 0.004 from the reading.

Interpreting the Results of the Hydrometer Test

The approximate state of charge can be determined by referring to the following table:

SPECIFIC GRAVITY(TEMPERATURE CORRECTED)	APPROXIMATE STATE OF CHARGE
1.250-1.280	100%
1.220-1.240	75%
1.190-1.210	50%
1.160-1.180	25%

If the difference between the cells is 0.020 or more, the low cell should be suspected. It may require a catch-up charge or it may be a weak cell. When the variations between cells reach 0.050 or more, the battery should be replaced.

Voltage Test

1. Take a voltage reading with a multimeter set to 20 VDC by placing the red (+) probe on the positive (+) battery post and the black (–) probe on the negative (–) battery post. If it shows less than 12.4 volts, or if the lowest specific gravity reading from the Hydrometer Test is less than 1.225, recharge the battery. If battery voltage is greater than 12.4 volts and specific gravity is greater than 1.225, the problem is not with the battery. If the battery

does not reach 12.4 volts, or if the specific gravity of a cell is still less than 1.225 after charging, replace the battery. **See following NOTE.**

NOTE: *A fully charged battery that is in good condition should have a specific gravity of at least 1.225 in all cells, and the difference in the specific gravity of any two cells should be less than 50 points. Open circuit voltage should be at least 12.4 volts.*

Load Test

1. Connect a 160-ampere load tester to the battery posts.
2. Turn the switch on the load tester to the ON position.
3. Read the battery voltage after the load tester has been turned on for 15 seconds. Compare the battery's voltage reading with the following table. Make sure you have the correct ambient temperature.

IF TEMPERATURE IS	MINIMUM CRANKING VOLTAGE
70 °F (20 °C and above)	9.6 V
60 °F (16 °C)	9.5 V
50 °F (10 °C)	9.4 V
40 °F (4 °C)	9.3 V
30 °F (-1 °C)	9.1 V
20 °F (-7 °C)	8.9 V
10 °F (-12 °C)	8.7 V
0 °F (-18 °C)	8.5 V

4. If the battery is found to be good, or if the electrical problem continues after the battery has been replaced with a good one, test the electrical circuits.

TEST PROCEDURE 2 – Fuse

See General Warnings on page 1-1.

The fuse (red 10 amp) is located in the wiring harness **(Figure 11-8, Page 11-15)**.

1. Disconnect battery. **See Disconnecting the Battery – Gasoline Vehicles on page 1-3.**
2. Remove the cover from in-line fuse.
3. Ensure that the wires are connected correctly and are tight. If they are not, rewire or tighten as necessary.
4. Remove fuse to be tested from the fuse holder. **See Fuse Removal on page 13-28.**
5. Connect the probes of a multimeter, set to 200 ohms, to the fuse terminals. The reading should be continuity. If there is no continuity, determine and repair the cause of the fuse failure. Replace the fuse with a properly rated new one.

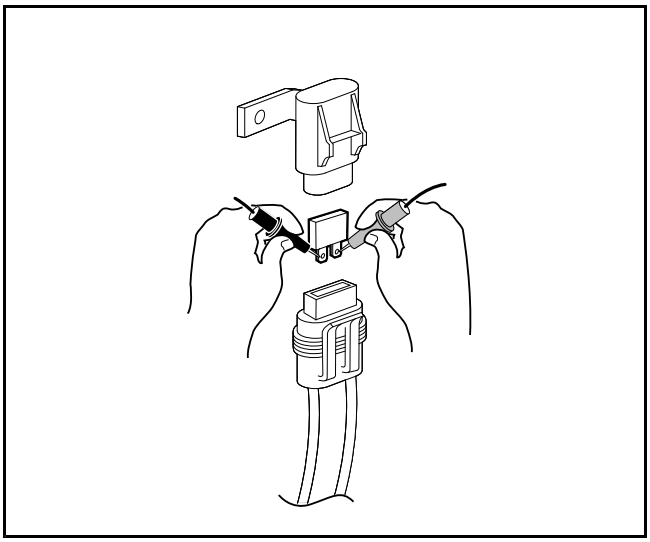

2418

Figure 11-8 Fuse

TEST PROCEDURE 3 – Ground Cables

See General Warnings on page 1-1.

1. Disconnect battery and spark plug wire(s). **See Disconnecting the Battery – Gasoline Vehicles on page 1-3.**
2. Check the starter/generator ground cable.
   2.1. Set the multimeter to 200 ohms. Place the red (+) probe on the A2 terminal of the starter/generator and place the black (–) probe on the vehicle frame **(Figure 11-9, Page 11-15)**. The reading should be continuity. If there is no continuity, clean and tighten cable connections. If the connections are good, repair or replace the cable.
3. Check the engine ground cable.
   3.1. Place the red (+) probe of the multimeter on the ground cable terminal end located on the oil filler bracket on the engine **(Figure 11-10, Page 11-15)**. Place the black (–) probe on the vehicle frame. The reading should be continuity. If the reading is incorrect, clean and tighten cable connections. If the connections are good and the reading is incorrect, repair or replace the cable.

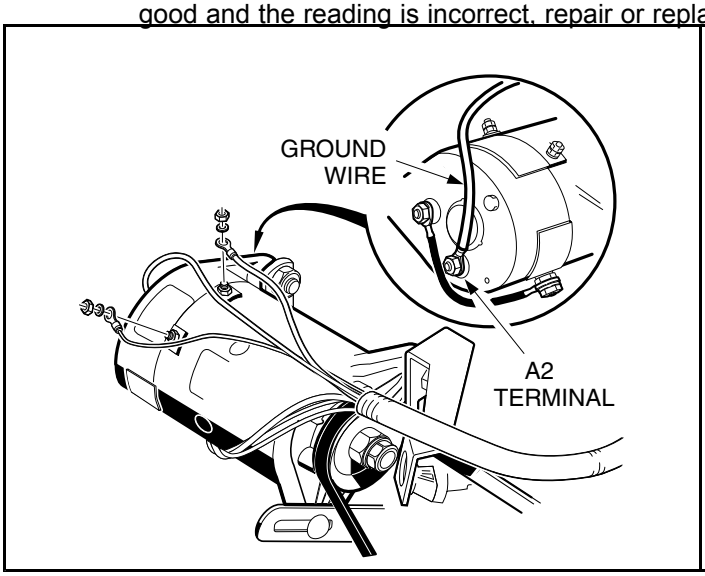

2419

Figure 11-9 Starter/Generator Ground Cable Test

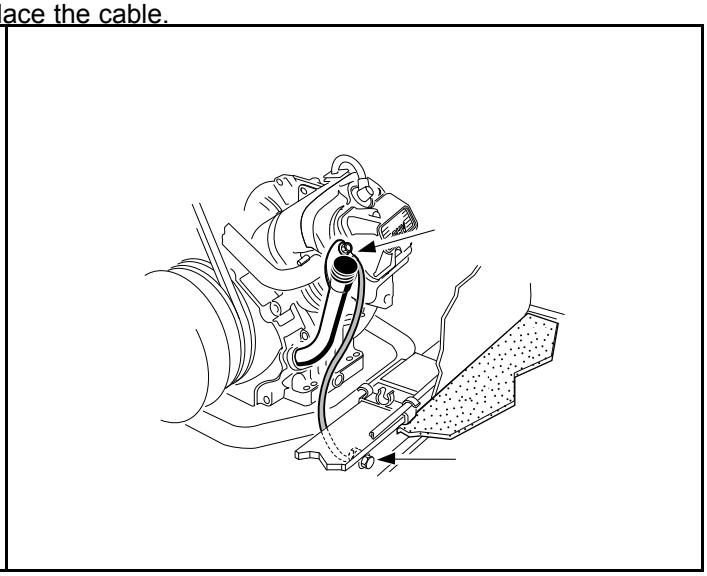

1700-19700-10372

Figure 11-10 Engine Ground Cable Test

4. Check the battery ground cable.

4.1. Four 10-gauge black wires are crimped together and connected to the negative (–) battery post. One of these wires is connected via a single position in-line connector to the frame. The frame connection should be clean and tight. Visual inspection of the connection on the frame is very difficult. The best check for tightness is to pull on the black cable. If the cable moves at the connection end, disassemble the frame connection and clean the bolt, ring terminal, and nut. Reinstall the frame connection.

4.2. Set the multimeter to 200 ohms. Place the red (+) probe on the unconnected end of the 6-gauge black cable, and place the black (–) probe on the vehicle frame **(Figure 11-11, Page 11-16)**. The reading should be continuity. If the reading is incorrect, ensure that terminal connections are clean and tight. If the connections are good and the reading is incorrect, check that the in-line connector is secure, repair or replace the cable.

5. Check the fuel tank ground.

5.1. A 16-gauge wire runs from the fuel tank to the wire harness where it is sonically welded to the other ground wires. Check the ground connection at the fuel tank.

5.2. Set the multimeter to 200 ohms. Place the red (+) probe on the terminal for the fuel tank ground connection, and place the black (–) probe on the vehicle frame **(Figure 11-12, Page 11-16)**. The reading should be continuity. If there is no continuity, clean and tighten all cable connections. If the connections are good, repair or replace the cable.

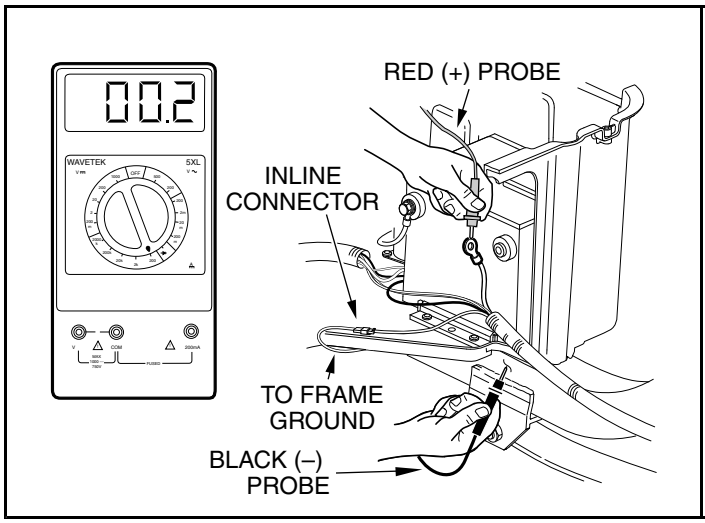

2420

Figure 11-11 Battery Ground Cable Test

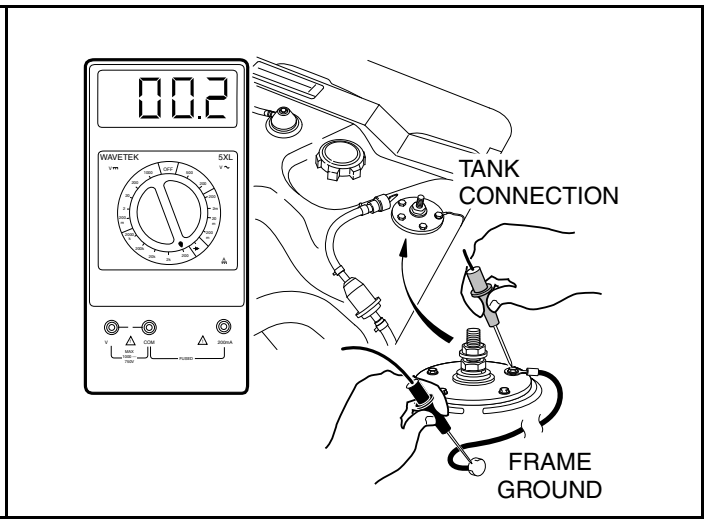

2421

Figure 11-12 Fuel Tank Ground

TEST PROCEDURE 4 – Key Switch (Starter Circuit)

See General Warnings on page 1-1.

1. Disconnect battery and spark plug wire(s). **See Disconnecting the Battery – Gasoline Vehicles on page 1-3.**
2. Remove the instrument panel assembly. **See Key Switch Removal on page 13-26.**
3. Ensure that the wires are connected correctly and are tight. If they are not, rewire or tighten as necessary.
4. Insert the key and turn the switch to ON. Place the red (+) probe of the multimeter on the No. 2 terminal and the black (–) probe on the No. 1 terminal of the key switch. The reading should be continuity. If the reading is incorrect, replace the key switch **(Figure 11-13, Page 11-17)**.

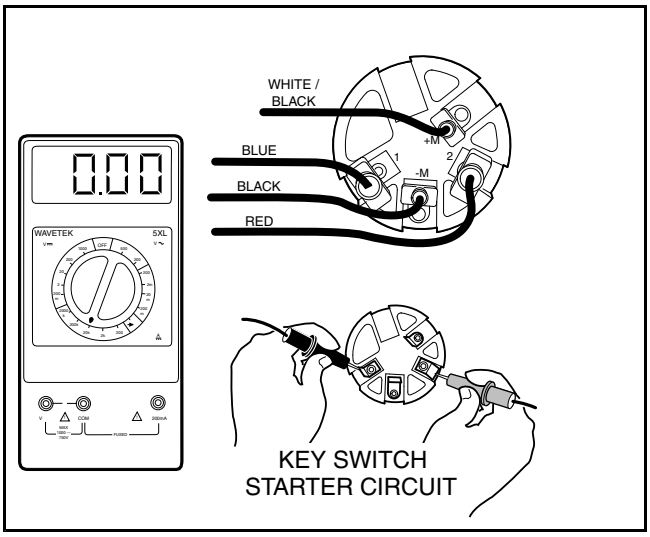

2422
Figure 11-13 Test Key Switch – Engine Starter Circuit

TEST PROCEDURE 5 – GCOR

See General Warnings on page 1-1.

The GCOR contains two limit switches: the accelerator pedal limit switch and the kill limit switch. These two switches are sealed and cannot be repaired or replaced. A four-pin connector provides electrical connections to both switches. Test procedures for the switches are found in the following two procedures. If either test is failed, the GCOR must be replaced.

Accelerator Pedal Limit Switch

See General Warnings on page 1-1.

The green and orange wires from the connector are adhered to the accelerator pedal limit switch.

1. Disconnect battery and spark plug wire(s). **See Disconnecting the Battery – Gasoline Vehicles on page 1-3.**
2. Check for proper wiring and tight connections **(Figure 11-2, Page 11-7)**.
3. Set the multimeter to 200 ohms. Separate the electrical connector and place the red (+) probe on the green wire pin of the limit switch and place the black (–) probe on the orange wire pin of the limit switch **(Figure 11-14, Page 11-18)**.
4. Make sure the battery is disconnected. With the key switch in the OFF position, the Forward/Reverse handle in NEUTRAL, and the accelerator pedal in the UP position, the reading should be no continuity. With the accelerator pedal pressed, the reading should be continuity. If either reading is incorrect, replace the GCOR.

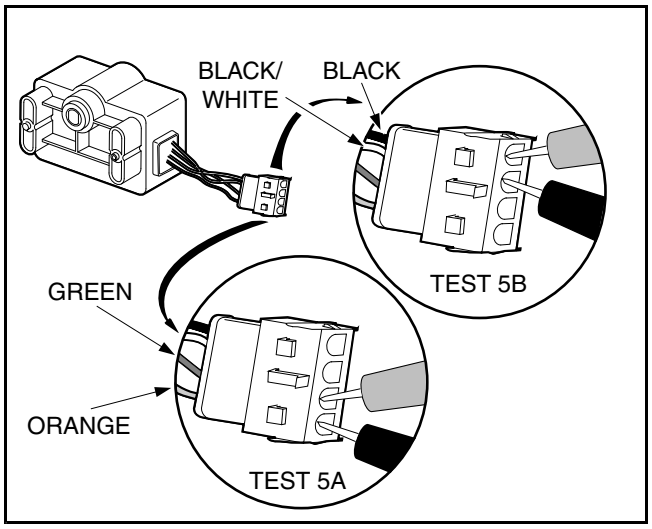

2423

Figure 11-14 GCOR

Kill Limit Switch

See General Warnings on page 1-1.

The black and black/white wires from the connector are adhered to the kill limit switch is located inside the GCOR.

1. Disconnect battery and spark plug wire(s). **See Disconnecting the Battery – Gasoline Vehicles on page 1-3.**
2. Check for proper wiring and tight connections.
3. Separate the electrical connector at the GCOR and test the limit switch for continuity. Place the red (+) probe of the multimeter on the black wire pin of the limit switch. Place the black (–) probe on the black/white wire pin.
4. With accelerator pedal in fully raised position, there should be continuity. With accelerator pedal pressed, there should be no continuity. If either reading is incorrect, replace the GCOR **(Figure 11-14, Page 11-18)**.
5. Connect wires to GCOR and check for tight connections.

TEST PROCEDURE 6 – Solenoid

See General Warnings on page 1-1.

1. Disconnect battery and spark plug wire(s). **See Disconnecting the Battery – Gasoline Vehicles on page 1-3.**
2. Ensure that the wires are connected correctly and are tight. If they are not, rewire or tighten as necessary.
3. Set a multimeter to 200 ohms. Place the red (+) probe on one of the small posts of the solenoid and place the black (–) probe on the other small post. The reading should be 14 to16 ohms. If the reading is not within limits, replace the solenoid.
4. Remove the 10-gauge white wire (crimped with a 16-gauge red wire) from the large post of the solenoid. Do not allow the wires to touch the frame or other components of the vehicle **(Figure 11-15, Page 11-19)**.

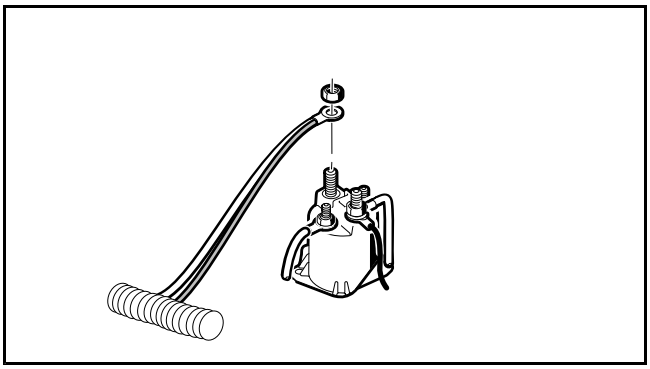

2424
Figure 11-15 Solenoid Wire Removal

5. Set the multimeter to 200 ohms. Connect the red (+) probe to one of the large posts of the solenoid and connect the black (–) probe to the other large post **(Figure 11-16, Page 11-19)**.

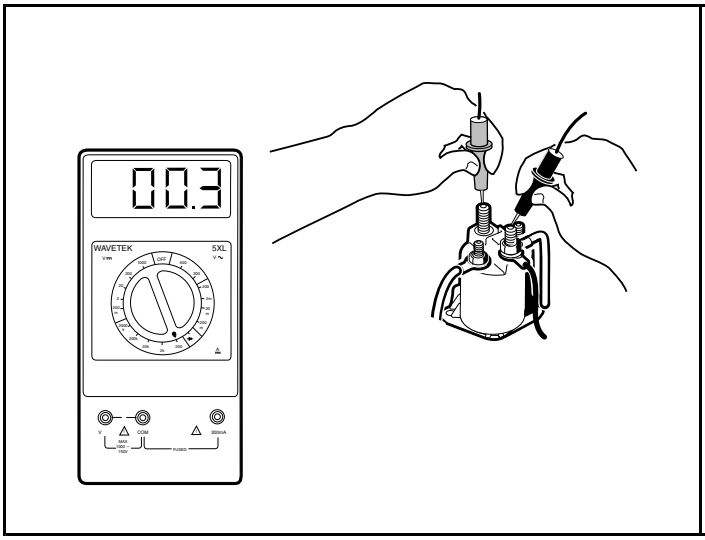

2425
Figure 11-16 Solenoid Continuity Test

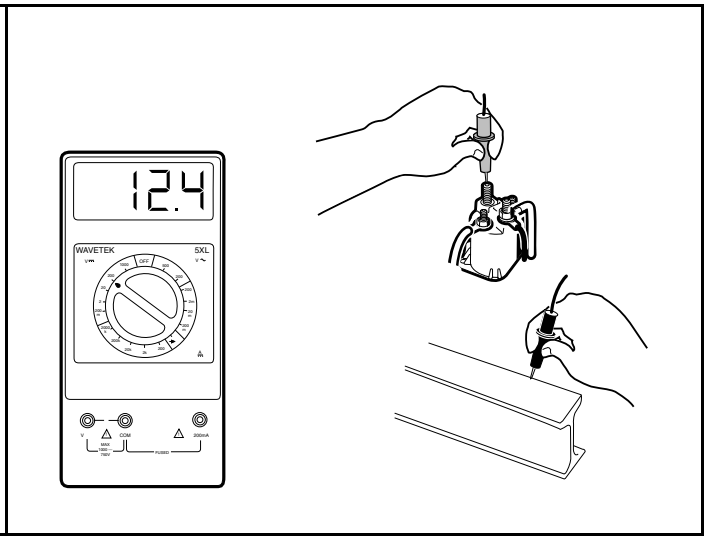

2426
Figure 11-17 Solenoid Ground Test

6. Connect battery cables, positive (+) cable first, and tighten hardware to 12 ft-lb (16.3 N·m).
7. Place the Forward/Reverse handle in NEUTRAL, and place the neutral lockout cam in the MAINTENANCE position. Turn the key switch to the ON position. With the accelerator in the UP position, the reading on the multimeter should be no continuity. Press the accelerator pedal and listen for the solenoid click. There should be continuity. If either reading is incorrect, replace the solenoid.
8. With the Forward/Reverse handle still in NEUTRAL and the neutral lockout cam in the MAINTENANCE position, set the multimeter to 20 volts DC and place the red (+) probe on the large post that does not have wires connected to it. Place the black (–) probe on the vehicle frame. Turn key switch to the ON position, press accelerator pedal, and listen for solenoid click. The meter should read full battery voltage. If the reading is incorrect, replace the solenoid **(Figure 11-17, Page 11-19)**.
9. Disconnect the 10-gauge black cables from the negative (–) post of the battery before reconnecting the wires to the solenoid.

TEST PROCEDURE 7 – Neutral Lockout Limit Switch

See General Warnings on page 1-1.

This switch is located on the Forward/Reverse switch assembly. There is a black wire, a green wire, and a white wire connected to this limit switch.

1. Disconnect battery and spark plug wire(s). **See Disconnecting the Battery – Gasoline Vehicles on page 1-3.**
2. Check for proper wiring and tight connections.
3. Set the multimeter to 200 ohms. Place the red (+) probe of the multimeter on the common (COM) terminal of the limit switch. Place the black (–) probe on the normally open (NO) terminal of the switch. Without the lever pressed, the reading should be no continuity. Press the lever, and the reading should be continuity. If either reading is incorrect, replace the limit switch **(Figure 11-18, Page 11-20)**.

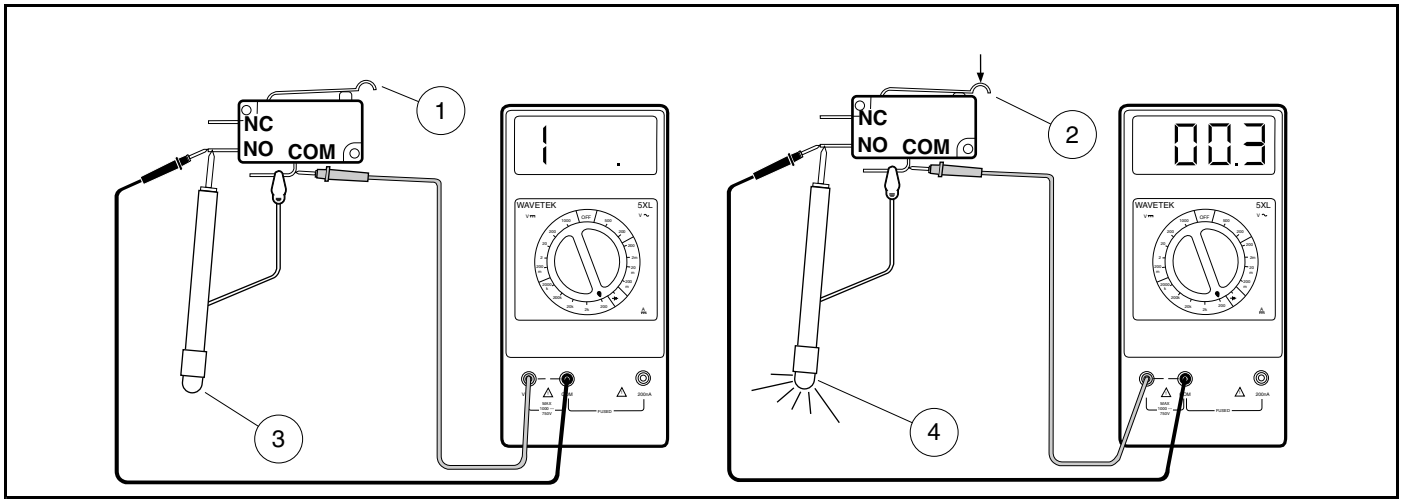

460

Figure 11-18 Test Neutral Lockout Switch

4. Check to be sure the lobes on the cam are pressing the neutral lockout limit switch as the Forward/Reverse handle is being shifted. The limit switch should make an audible click as it is pressed. If it does not, check for wear on the cam lobes. Be sure the cam snaps fully back into place. If the cam lobes still do not activate the limit switch, replace the cam.

TEST PROCEDURE 8 – Starter/Generator (Starter Function)

See General Warnings on page 1-1.

1. Disconnect battery and spark plug wire(s). **See Disconnecting the Battery – Gasoline Vehicles on page 1-3.**
2. Ensure that wires are connected correctly and are tight. If they are not, rewire or tighten as necessary.
3. Disconnect the wires from all the terminals on the starter/generator. Then place the black (–) probe of a multimeter, set to 200 ohms, on the starter/generator housing (scratch through the paint to ensure a good ground). While holding the black (–) probe against the housing, place the red (+) probe (one at a time) on the A1, A2, F1, F2 and DF terminals respectively **(Figure 11-19, Page 11-21)**. The readings should be no continuity. If the readings are incorrect, the starter/generator will need to be removed from the vehicle and disassembled by a qualified technician. **See Electrical Components on page 13-1.**
   - An incorrect reading from A1 or A2 terminal indicates three possible problems: 1) a grounded A1 or A2 terminal, 2) a grounded wire in the brush area, or 3) a grounded armature/commutator.
     - If the F1 or F2 reading is incorrect, it indicates a possible grounded F1 or F2 terminal or a grounded field coil.
     - If the DF reading is incorrect, it indicates a possible grounded DF terminal or a grounded field coil.
4. Disconnect the ground wire from the A2 terminal and the green wire from the A1 terminal on the starter/generator.

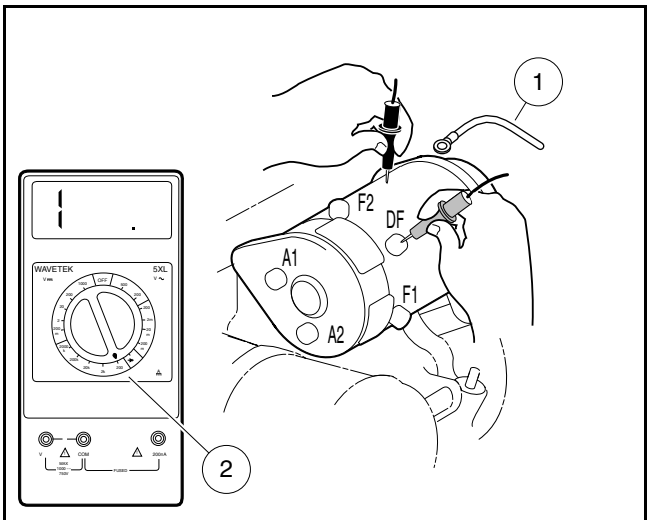

1. Yellow Wire 2. 200 Ohm Setting

461

Figure 11-19 Check Terminal Continuity

5. Using a multimeter set to 200 ohms, place the red (+) probe on the A1 terminal and the black (–) probe on the A2 terminal. The reading should be continuity. If the reading is incorrect, a possible open or poor contact in a brush assembly and/or open armature windings may be the cause. The starter/generator will need to be removed from the vehicle and disassembled by a qualified technician. **See Electrical Components on page 13-1.**
6. With the wires still disconnected, using a multimeter set on 200 ohms, place the red (+) probe on the F1 terminal and the black (–) probe on the F2 terminal. The reading should be between approximately .1 and .3 ohms. If the reading is incorrect, a possible open field coil or bad connections at terminals may be the cause. The starter/generator will need to be removed from the vehicle and disassembled by a qualified technician. **See Electrical Components on page 13-1.**
7. With the wires still disconnected, using a multimeter set on 200 ohms, place the red (+) probe on the DF terminal and the black (–) probe on the F1 terminal. The reading should be between 4.5 and 5.5 ohms. If the reading is incorrect, a possible grounded DF terminal and/or grounded field coil may be the cause. The starter/generator will need to be removed from the vehicle and disassembled by a qualified technician. **See Electrical Components on page 13-1.**

TEST PROCEDURE 9 – Wire Continuity

See General Warnings on page 1-1.

1. Disconnect battery and spark plug wire(s). **See Disconnecting the Battery – Gasoline Vehicles on page 1-3.**
2. To test a wire for continuity, disconnect either end from the electrical component it is attached to.
3. Set the multimeter to 200 ohms and place the red (+) probe on the terminal at one end of the wire. Place the black (–) probe on the other terminal end of the wire. The reading should be continuity. If the reading is incorrect, repair or replace the wire.

TEST PROCEDURE 10 – Starter/Generator (Generator Function)

See General Warnings on page 1-1.

NOTE: *Keep the battery connected while performing this test procedure.*

1. Place the neutral lockout cam in the MAINTENANCE position, put the Forward/Reverse handle in the NEUTRAL position, and chock the wheels.
2. Ensure that the wires are connected correctly and are tight. If they are not, rewire or tighten as necessary.

3. Disconnect the yellow wire from the DF terminal on the starter/generator. Cover the connector on the yellow wire to make sure the yellow wire will not short to ground. Then, using a jumper wire, ground the DF terminal to the A2 terminal **(Figure 11-20, Page 11-22)**.

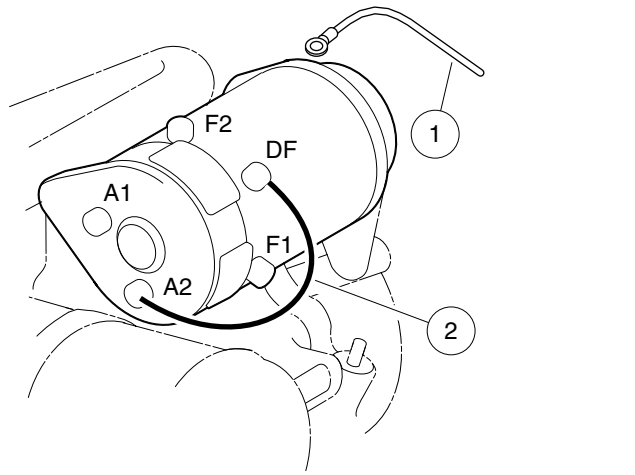

1. Yellow Wire 2. Jumper Wire

462

Figure 11-20 Jumper Wire Ground – DF to A2

4. Using a multimeter set to 20 volts DC, place the red (+) probe on the positive (+) post of the battery, and place the black (–) probe on the negative (–) post. Turn the key switch to ON position, press the accelerator pedal to start the engine and run it at full governed speed. The reading should show the voltage rising on the meter. If the voltage rises above 15.3 volts DC, test the voltage regulator. **See Test Procedure 11 – Voltage Regulator on page 11-22.** If the voltage does not rise, a tear-down inspection of the starter/generator will be necessary.
5. Connect the yellow wire to the DF terminal on the starter/generator.

TEST PROCEDURE 11 – Voltage Regulator

See General Warnings on page 1-1.

NOTE: *Keep the battery connected while performing this test procedure.*

1. Place the neutral lockout cam in the MAINTENANCE position, put the Forward/Reverse handle in the NEUTRAL position, and chock the wheels.
2. Ensure that the wires are connected correctly and are tight. If they are not, rewire or tighten as necessary.
3. Check the engine RPM setting to ensure that it is correctly adjusted. **See Engine RPM Adjustment on page 16-8.**
4. With the battery in good condition and fully charged, run the engine for several minutes to bring the voltage regulator to operating temperature.
5. Turn the key switch to OFF, killing the engine. Using a multimeter set to 20 volts DC, place the red (+) probe on the large post of the solenoid with the red and white wires crimped together from the voltage regulator attached. Place the black (–) probe on the negative (–) battery post **(Figure 11-21, Page 11-23)**. Turn the key switch to the ON position. Press the accelerator to start the engine and run it at full governed speed. If the reading is between 14.7 and 15.3 volts, the regulator is good. If the reading is lower than 14.7 volts but rising steadily, check battery condition. If the reading is lower than 14.7 volts and not rising, and the starter/generator is good; or if the reading is over 15.3 volts and continues to rise, replace voltage regulator. **See Voltage Regulator Removal on page 13-25.**

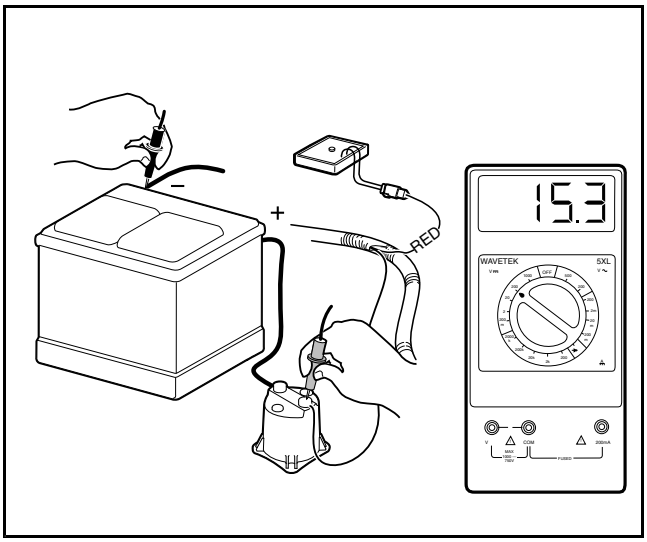

2427

Figure 11-21 Voltage Regulator Test

TEST PROCEDURE 12 – Disconnected Kill Wire

See General Warnings on page 1-1.

NOTE: *Keep the battery connected while performing this test procedure.*

1. Place the neutral lockout cam in the MAINTENANCE position, put the Forward/Reverse handle in the NEUTRAL position, and chock the wheels.
2. Disconnect the engine kill white/black wire at the bullet connector located next to the RPM limiter **(Figure 11-22, Page 11-24)**.
3. With the neutral lockout cam in the MAINTENANCE position, turn the key switch to the ON position. In a well ventilated area, depress the accelerator to start the engine.
4. If the engine begins to run, test the engine kill circuit for a shorted wire or other failed components in the engine kill circuit. **See following WARNING.**

⚠ WARNING

- **When the white/black engine kill wire is disconnected, the engine will not stop running after the accelerator pedal is released. It will be necessary to press and hold the choke cover closed until the engine stops running.**

5. If the engine does not run, proceed to Test Procedure 13 – Ignition Spark on page 11-24.

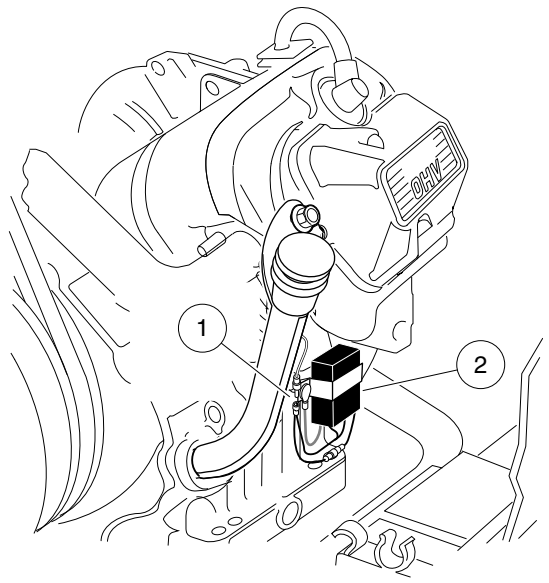

1. Disconnect White/Black Engine Kill Wire 2. RPM Limiter

465
Figure 11-22 Disconnect White/Black Engine Kill Wire

TEST PROCEDURE 13 – Ignition Spark

See General Warnings on page 1-1.

NOTE: *Keep the battery connected while performing this test procedure.*

1. Place the neutral lockout cam in the MAINTENANCE position, put the Forward/Reverse handle in the NEUTRAL position, and chock the wheels.
2. Remove the plug wire from the spark plug. Using an ignition spark gap test tool (Thexton 404® or equivalent), check for correct spark **(Figure 11-23, Page 11-25)**.
   - 2.1. Adjust the tester probes to approximately to 18,000 volts (18 Kv) setting (SE – *Small Engine Setting* on the Thexton 404 tool). Connect the tester to the spark plug wire, and connect the alligator clip to a solid engine ground.
   - 2.2. Turn the key switch to the ON position and crank the engine by pressing the accelerator. There should be a strong blue spark between the probes of the spark gap tester. If there is no spark, or if the spark is a faint yellow or red color, test components of the ignition circuit. **See Test Procedure 15 – Ignition Coil on page 12-27.**

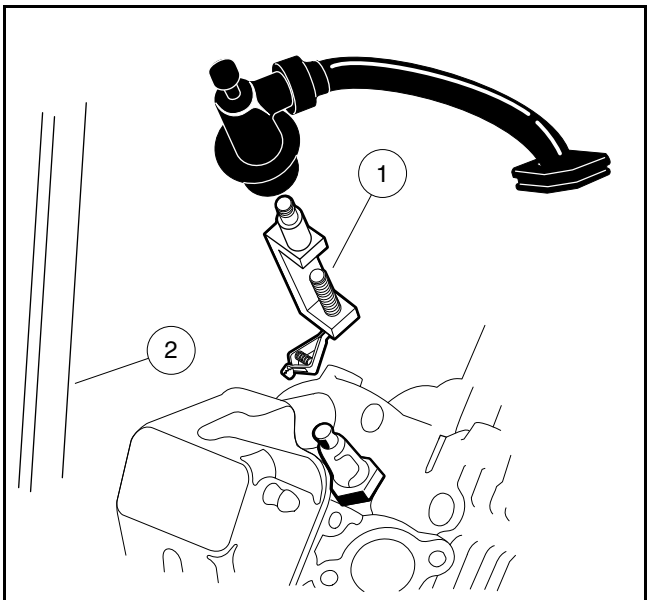

1. Ignition Gap Test Tool 2. Chassis

464

Figure 11-23 Ignition Spark Test

3. If the spark gap tester tool indicates a strong blue spark, it is possible the spark plug has failed internally. Check the spark plug gap. The gap should be set at 0.027 to 0.031 of an inch (0.69 to 0.79 mm). If the gap is correct, replace the spark plug with a new part and test the engine for proper operation.

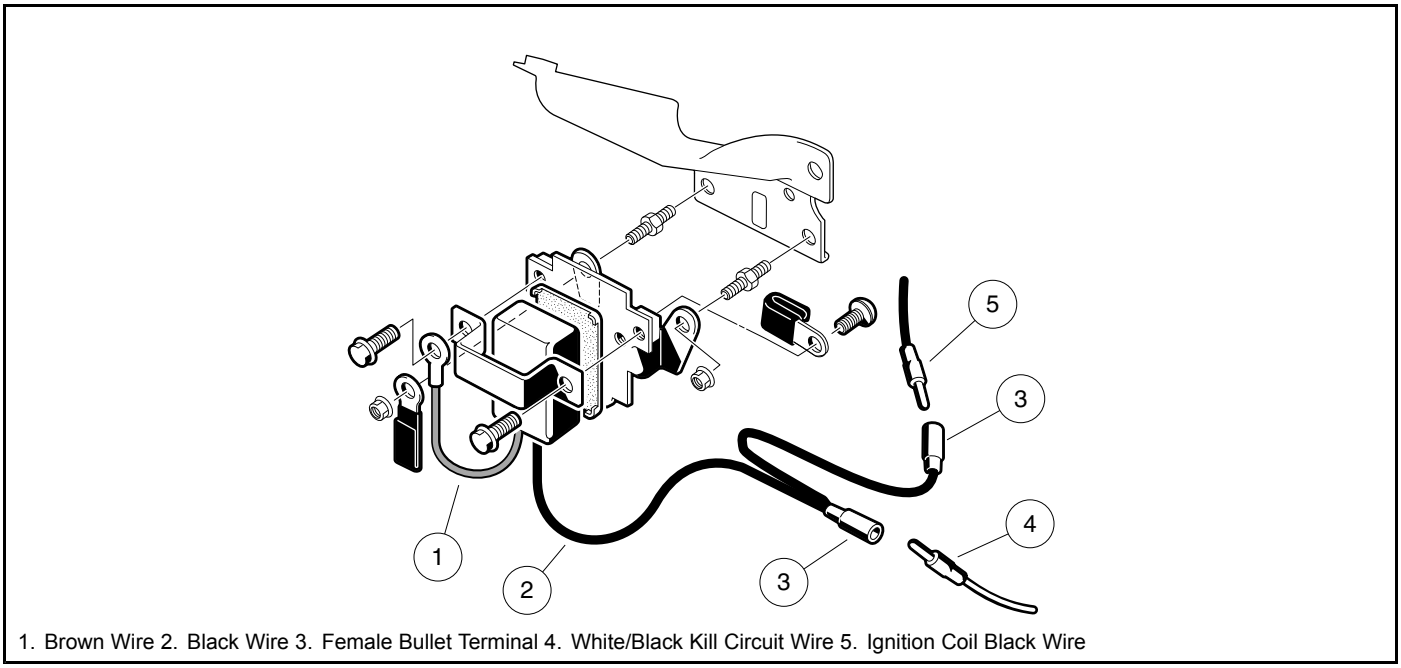

1. Brown Wire 2. Black Wire 3. Female Bullet Terminal 4. White/Black Kill Circuit Wire 5. Ignition Coil Black Wire

466

Figure 11-24 RPM Limiter

TEST PROCEDURE 14 – RPM Limiter

See General Warnings on page 1-1.

1. Disconnect battery and spark plug wire(s). **See Disconnecting the Battery – Gasoline Vehicles on page 1-3.**
2. Disconnect both of the bullet terminals **(Figure 11-24, Page 11-25)**.
3. Using a multimeter set on 200 ohms, place the red (+) probe on the brown ground wire and place the black (–) probe on one of the black wire female bullet connectors. The reading should be no continuity. If the reading is not correct, replace the RPM Limiter.
4. This test will find most bad RPM Limiters. Some of them may bench test okay but fail under a load due to heat while operating. Another method of testing is to replace the RPM Limiter and then run the engine. If the engine runs properly, keep the new RPM Limiter in the circuit.

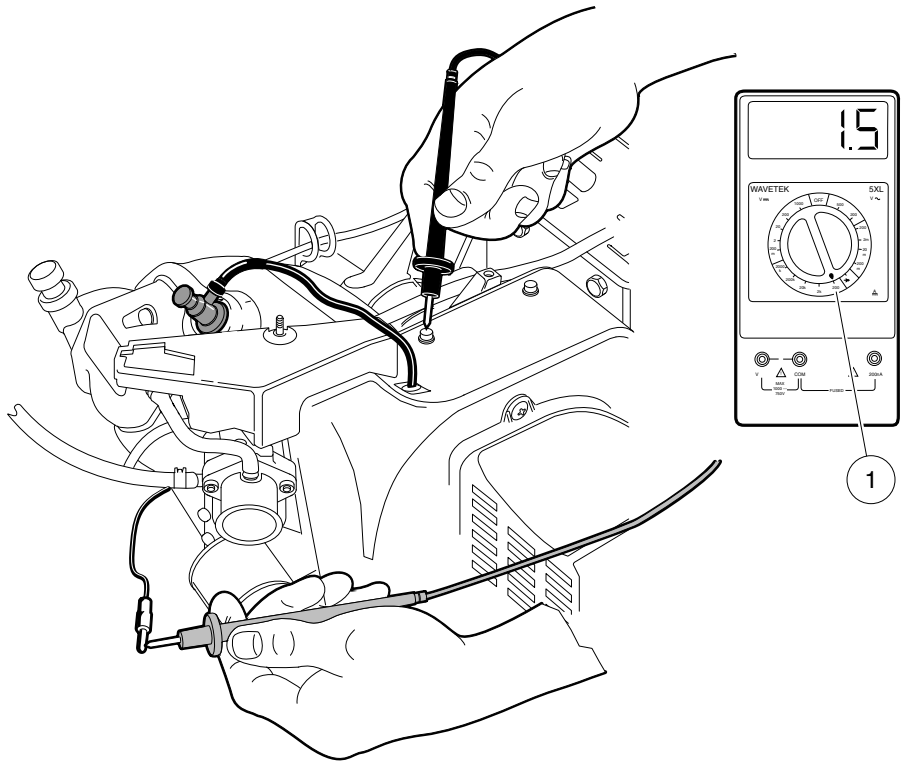

1. 200 Ohm Setting

467

Figure 11-25 Primary Coil Resistance – In Vehicle Test

TEST PROCEDURE 15 – Ignition Coil

See General Warnings on page 1-1.

The following test procedures will properly detect a coil that has failed in most cases; however, in rare cases, some ignition coils can fail to operate at normal (warmer) operating temperatures. If the ignition coil has tested okay in the vehicle and on the bench, but fails to operate reliably, replace the coil with a known good coil and operate the engine for several minutes to ensure that the coil functions at normal operating temperature. If the new coil functions properly, keep the new coil in the circuit.

Ignition Coil – In Vehicle Test

1. Disconnect battery and spark plug wire(s). **See Disconnecting the Battery – Gasoline Vehicles, Section 1, Page 1-3.**
2. Using a multimeter set to 200 ohms, measure the primary coil resistance.
   2.1. Disconnect both of the bullet terminals at the RPM limiter **(Figure 12-23, Page 12-25)**. Place the red (+) probe of the meter on the male bullet terminal of the wire connecting to the ignition coil under the fan housing, and place the black (–) probe on a clean unpainted surface of the engine or frame **(Figure 12-26, Page 12-27)**.
   2.2. If the resistance is not between 0.6 - 1.7 ohms, bench test the ignition coil.

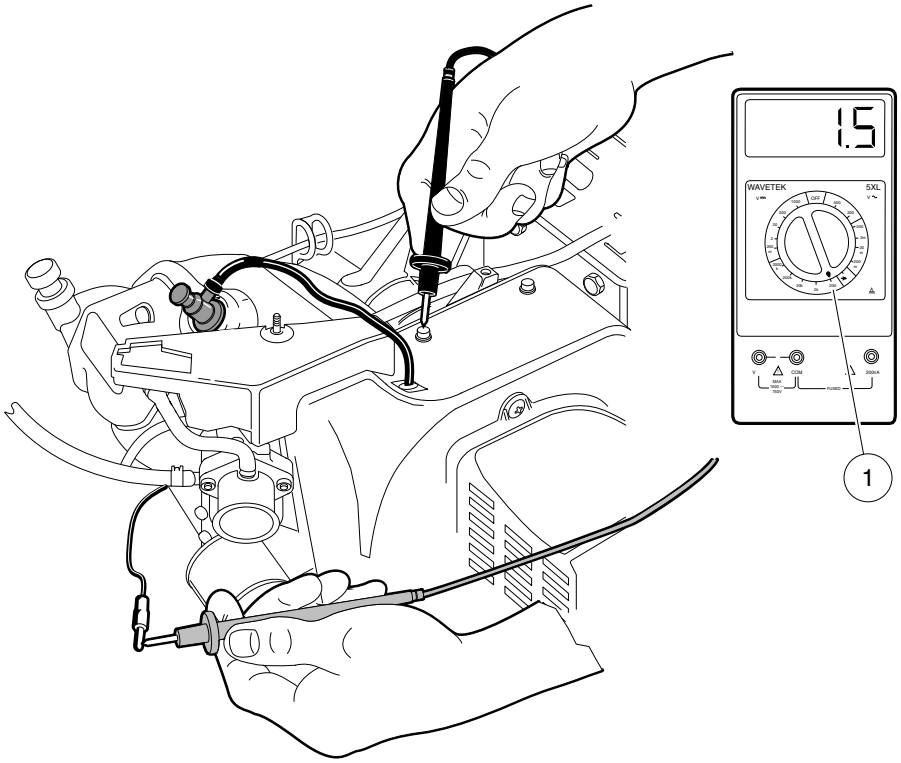

1. 200 Ohm Setting

467

Figure 11-26 Primary Coil Resistance – In Vehicle Test

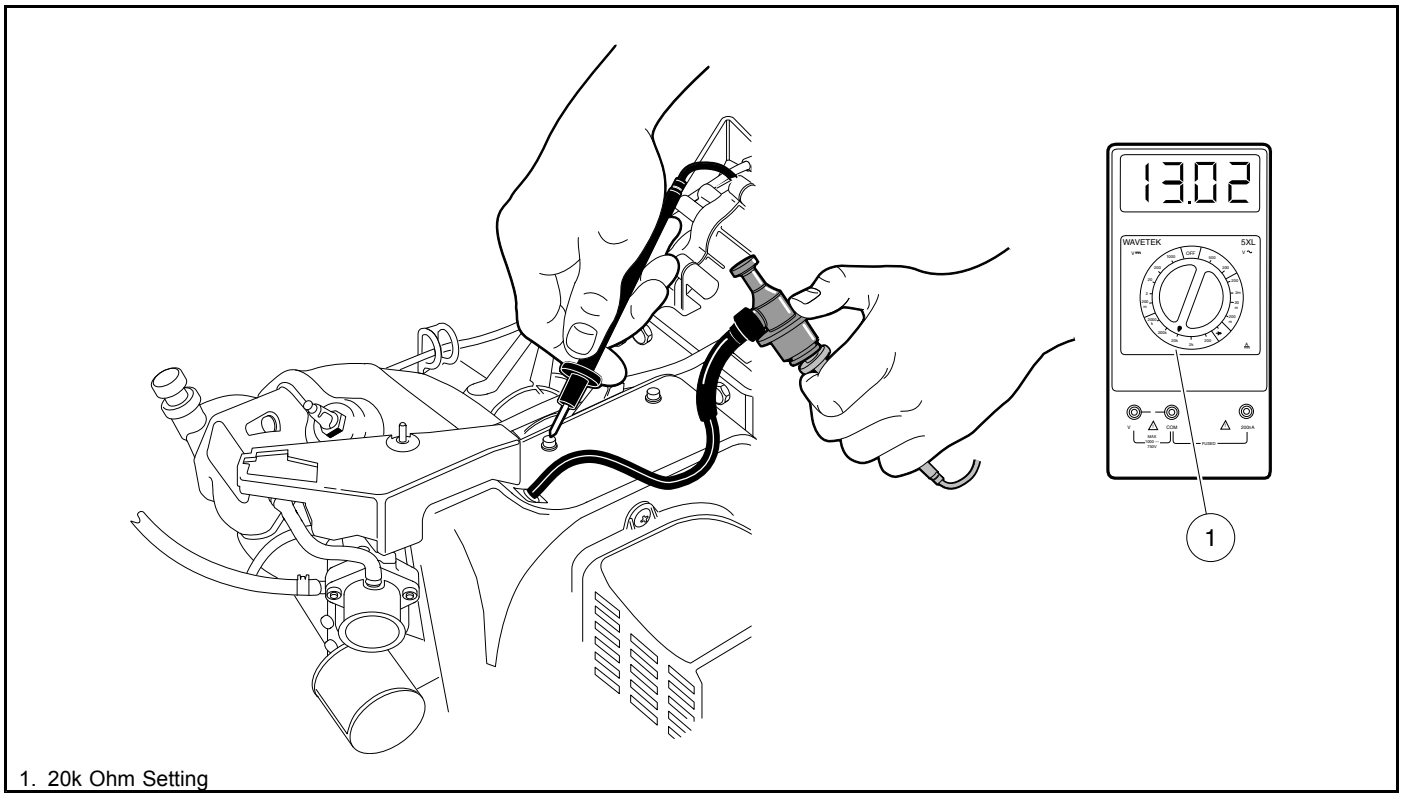

1. 20k Ohm Setting

468

Figure 11-27 Secondary Coil Test – In Vehicle Test

3. Using a multimeter set to 20k ohms, measure the resistance of the secondary coil and spark plug cap together.
   3.1. Place the red (+) probe of the meter into the end of the spark plug cap that normally connects to the spark plug and place the black (–) probe on a clean unpainted surface of the engine or frame **(Figure 12-27, Page 12-28)**.
   3.2. If the resistance is between 12.0k - 14.0k ohms, the secondary coil and spark plug cap are within acceptable limits; proceed to step 6 on page 12-25. If the resistance is not between 12.0k - 14.0k ohms, the spark plug cap and secondary coil must be tested independently from each other.
4. Test the spark plug cap separately from the secondary coil.
   4.1. Remove the rubber gasket (1) on the plug cap (2) by rolling back the gasket onto the spark plug wire (3) **(Figure 12-28, Page 12-29)**.
   4.2. Remove the cap from the wire by turning the cap counterclockwise three or four revolutions while gently pulling it off the wire **(Figure 12-29, Page 12-29)**.

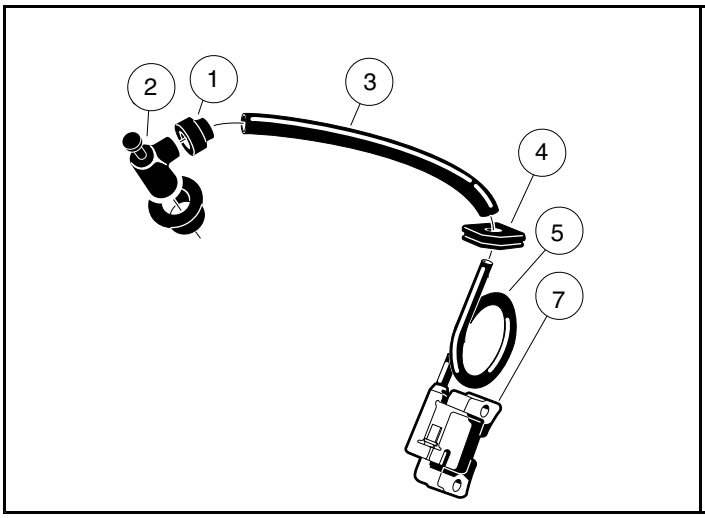

469

Figure 11-28 Ignition Coil and Cap

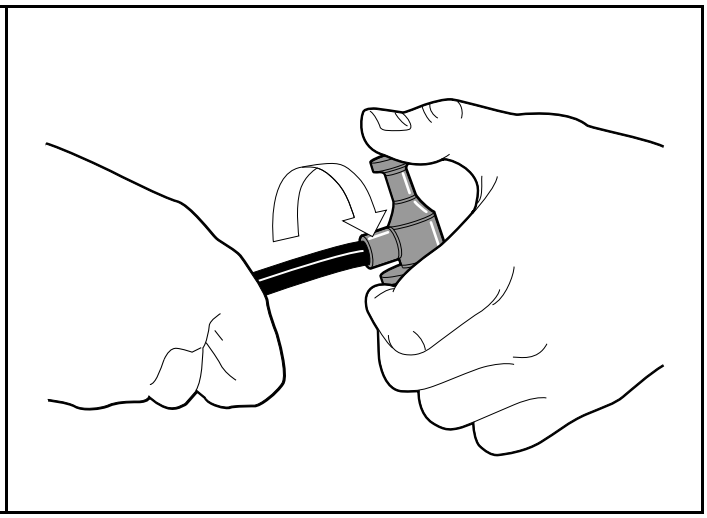

470

Figure 11-29 Spark Plug Cap Removal

4.3. Using a multimeter set to 20k ohms, place the red (+) probe of the multimeter into the end of the spark plug cap that normally connects to the spark plug and place the black (–) probe into the end of the cap with the internal screw **(Figure 12-30, Page 12-29)**. If the resistance is not between 4.5k - 6.0k ohms, the cap has failed and must be replaced. Proceed to the next step with the spark plug cap still removed.

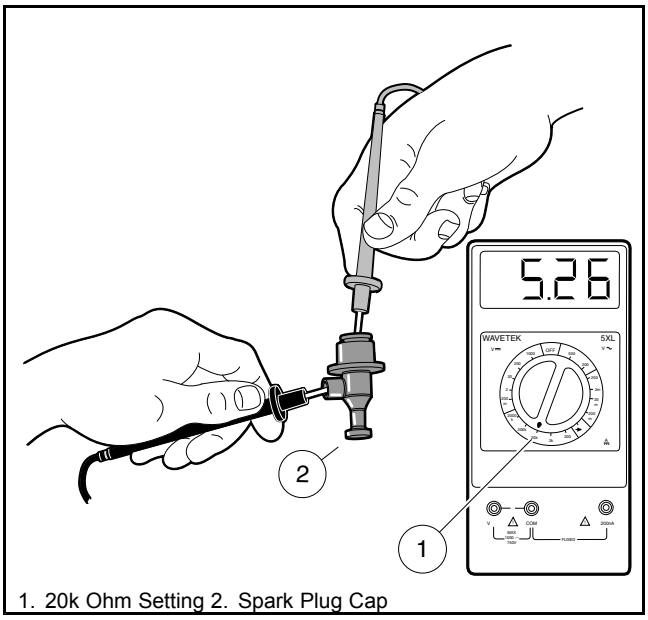

1. 20k Ohm Setting 2. Spark Plug Cap

471

Figure 11-30 Spark Plug Cap Test

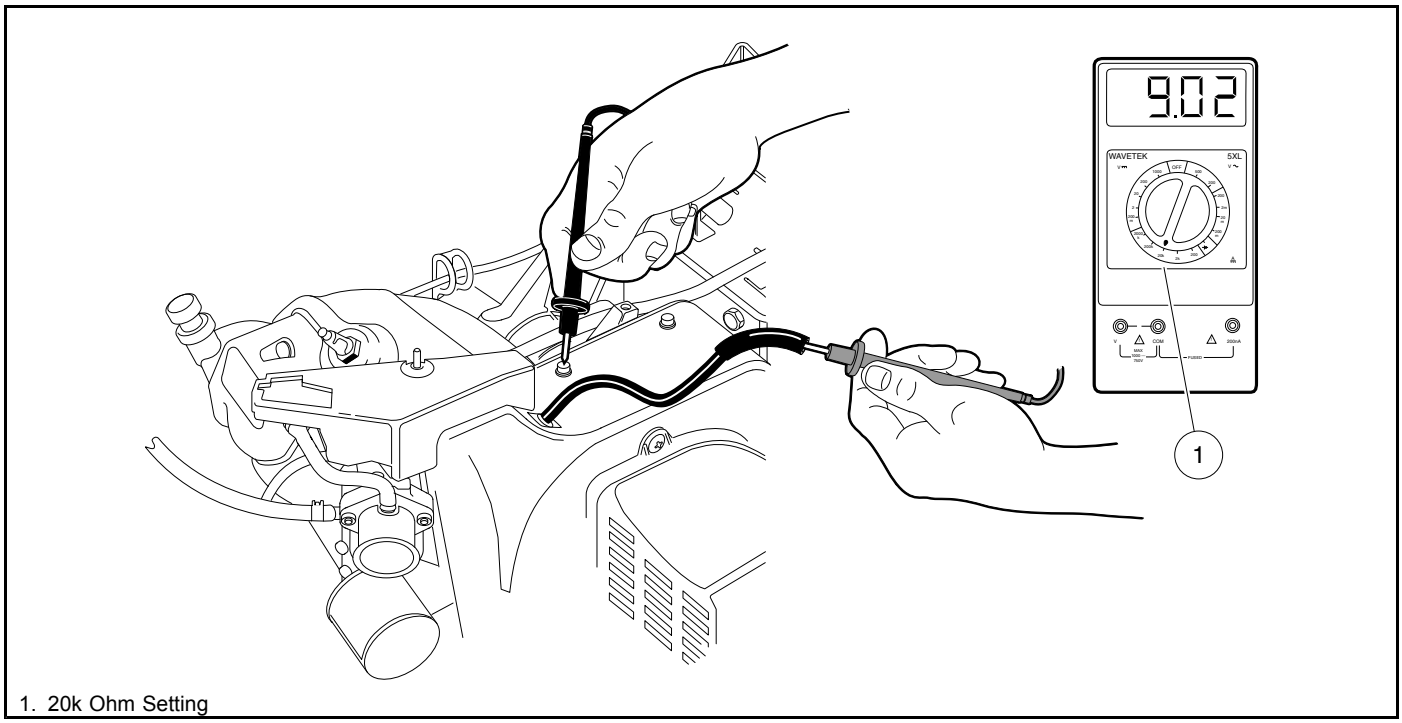

1. 20k Ohm Setting

472

Figure 11-31 Secondary Coil Test Without Cap

5. Test the secondary coil separately from the spark plug cap.
   5.1. Using a multimeter set to 20k ohms, place the red (+) probe of the meter into the end of the spark plug wire and place the black (–) probe on a clean unpainted surface of the engine or frame **(Figure 12-31, Page 12-30)**. If the resistance is between 6.0k - 11.0k ohms, the secondary coil is within acceptable limits. If the resistance is not between 6.0k - 11.0k ohms, bench test the ignition coil.
6. If the preceding tests indicate that the ignition coil resistance readings are within acceptable ranges, but the coil fails to function properly, proceed to the following bench test procedures.

Ignition Coil – Bench Test

1. Remove the coil from the engine. **See Ignition Coil Removal on page 13-37.**
2. Using a multimeter set to 200 ohms, measure the primary coil resistance.
   2.1. Place the black (–) probe of the meter on the terminal on the ignition coil (1), and place the red (+) probe on the core (2) **(Figure 12-32, Page 12-31)**.

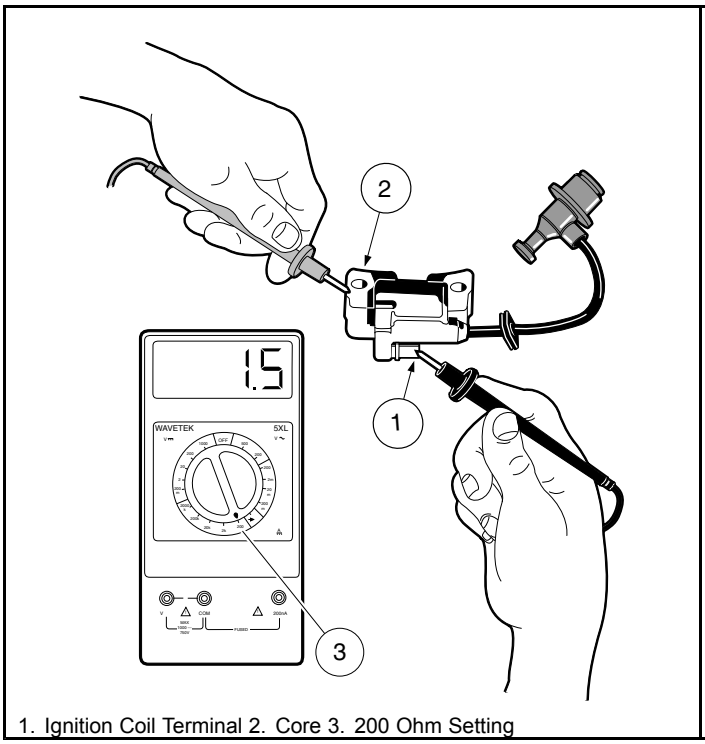

1. Ignition Coil Terminal 2. Core 3. 200 Ohm Setting

473
Figure 11-32 Primary Coil Resistance – Bench Test

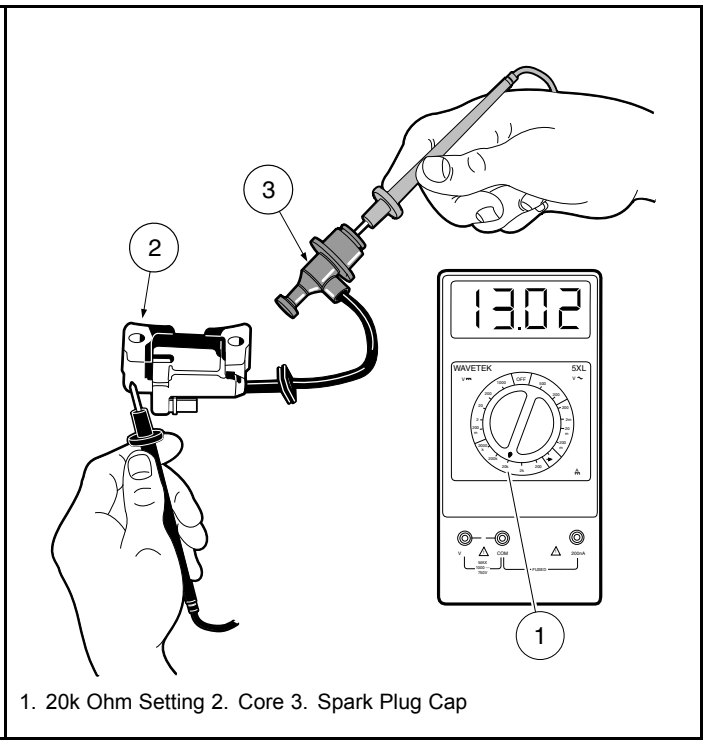

1. 20k Ohm Setting 2. Core 3. Spark Plug Cap

474
Figure 11-33 Secondary Coil and Cap Resistance – Bench Test

2.2. If the resistance is not between 0.6 - 1.7 ohms, replace the ignition coil.

3. Using a multimeter set to 20k ohms, measure the resistance of the secondary coil and spark plug cap together.

3.1. Place the red (+) probe of the meter into the end of the spark plug cap (3) that normally connects to the spark plug and place the black (–) probe on the core (2) **(Figure 12-33, Page 12-31)**.

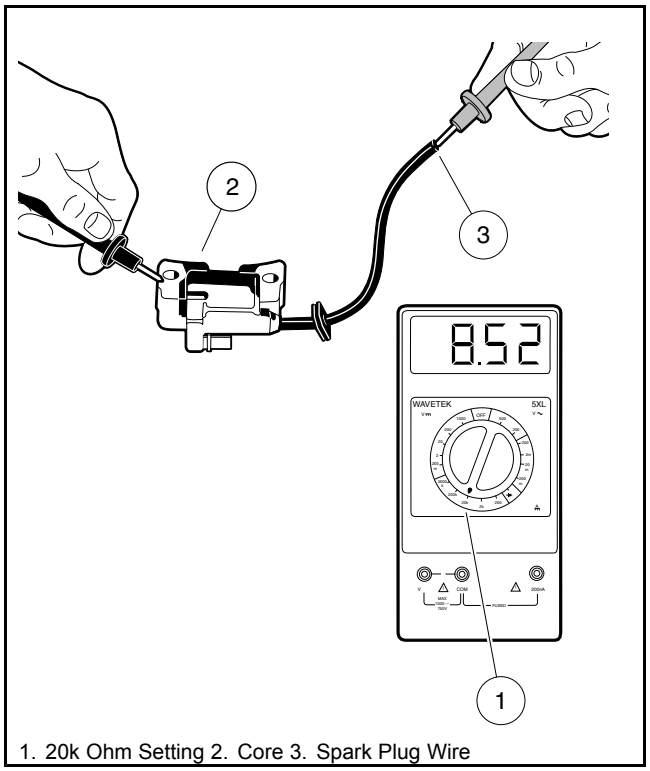

1. 20k Ohm Setting 2. Core 3. Spark Plug Wire

475
Figure 11-34 Secondary Coil Resistance – Bench Test

3.2. If the resistance is between 12.0k - 14.0k ohms, the secondary coil and spark plug cap are within acceptable limits; proceed to step 6 on page 12-26. If the resistance is not between 12.0k - 14.0k ohms, the spark plug cap and secondary coil must be tested independently from each other.

4. If not previously tested, test the spark plug cap separately from the secondary coil.
   4.1. Remove the rubber gasket (1) on the plug cap (2) by rolling back the gasket onto the spark plug wire (3) **(Figure 12-28, Page 12-29)**.
   4.2. Remove the cap from the wire by turning the cap counterclockwise three or four revolutions while gently pulling it off the wire **(Figure 12-29, Page 12-29)**.
   4.3. Using a multimeter set to 20k ohms, place the red (+) probe of the multimeter into the end of the spark plug cap that normally connects to the spark plug and place the black (–) probe into the end of the cap with the internal screw **(Figure 12-30, Page 12-29)**. If the resistance is not between 4.5k - 6.0k ohms, the cap has failed and must be replaced. Proceed to the next step with the spark plug cap still removed.
5. Test the secondary coil separately from the spark plug cap.
   5.1. Using a multimeter set to 20k ohms, place the red (+) probe of the meter into the end of the spark plug wire (3) and place the black (–) probe on the core (2) **(Figure 12-34, Page 12-32)**. If the resistance is between 6.0k - 11.0k ohms, the secondary coil is within acceptable limits. If the resistance is not between 6.0k - 11.0k ohms, the ignition coil has failed and must be replaced.
6. If the preceding tests indicate that the ignition coil resistance readings are within acceptable ranges, but the coil fails to function properly, replace the ignition coil and cap.
7. Connect battery and spark plug wire(s). **See Connecting the Battery – Gasoline Vehicles, Section 1, Page 1-3.**

TEST PROCEDURE 16 – Hour Meter

See General Warnings on page 1-1.

NOTE: *Keep the battery connected while performing this test procedure.*

1. Place the neutral lockout cam in the MAINTENANCE position, put the Forward/Reverse handle in the NEUTRAL position, and chock the wheels.
2. Turn the key switch to ON and record the current hour meter reading.
3. Press and hold the accelerator pedal to run the engine for at least six minutes (the meter records in six-minute increments). **See following DANGER.**

⚠ DANGER

- **Do not operate vehicle in an enclosed area without proper ventilation. The engine produces carbon monoxide, which is an odorless, deadly poison.**

4. If the reading does not change after six minutes, then replace the hour meter.

TEST PROCEDURE 17 – Key Switch (Engine Kill Circuit)

See General Warnings on page 1-1.

1. Disconnect battery and spark plug wire(s). **See Disconnecting the Battery – Gasoline Vehicles on page 1-3.**
2. Remove the instrument panel assembly. **See Key Switch Removal on page 13-26.**
3. Disconnect wires from the (+M) and (–M) terminals of the key switch.
4. Place the red (+) probe on the (+M) terminal and the black (–) probe on the (-M) terminal. With the key switch OFF, the reading should be continuity. With the key switch ON, the reading should be no continuity. If either reading is incorrect, replace the key switch **(Figure 11-35, Page 11-34)**.
5. Connect wires to key switch. Make sure wires are connected correctly and are tight. If they are not, rewire or tighten as necessary.
6. Install instrument panel in reverse order of removal.

TEST PROCEDURE 18 – Engine Kill Wire

See General Warnings on page 1-1.

1. Disconnect battery and spark plug wire(s). **See Disconnecting the Battery – Gasoline Vehicles on page 1-3.**
2. Disconnect white/black wire bullet connector located at the engine RPM limiter **(Figure 11-22, Page 11-24)**.
3. Connect red (+) probe of multimeter to the male bullet terminal on the white/black wire and connect the black (–) probe to the vehicle frame.
4. Turn the key switch ON, place the Forward/Reverse handle in FORWARD, and press the accelerator pedal. There should be no continuity. If there is continuity, check for worn insulation on the white/black wire that is allowing the wire to ground to the vehicle frame.

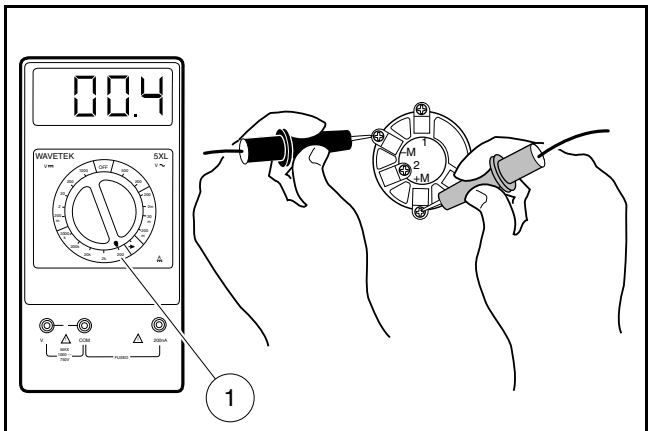

1. 200 Ohm Setting

1337
Figure 11-35 Test Key Switch – Engine Kill Circuit

TEST PROCEDURE 19 – Reverse Buzzer Limit Switch

See General Warnings on page 1-1.

NOTE: *Keep the battery connected while performing this test procedure.*

The reverse buzzer limit switch is located on the Forward/Reverse shifter; red/white and orange wires are connected to it.

1. Place the neutral lockout cam in the MAINTENANCE position, put the Forward/Reverse handle in the NEUTRAL position, and chock the wheels.
2. Move the Forward/Reverse handle to REVERSE and listen for an audible click from the limit switch. If there is no click, check the switch for proper alignment and switch arm movement.
3. If the switch is being activated but the buzzer does not function, place the red (+) probe of the multimeter on one terminal and the black (–) probe on the other terminal of the limit switch. Without the lever pressed, the reading should be no continuity. Press the lever and the reading should be continuity. If either reading is incorrect, replace the limit switch. **See Reverse Buzzer Limit Switch Removal on page 13-32.**

TEST PROCEDURE 20 – Reverse Buzzer

See General Warnings on page 1-1.

1. Disconnect battery and spark plug wire(s). **See Disconnecting the Battery – Gasoline Vehicles on page 1-3.**
2. Remove the instrument panel. **See Key Switch Removal on page 13-26.**
3. Check for proper wiring and tight connections. Using a multimeter, individually check for continuity through each wire that connects to the reverse buzzer. **See Wiring Diagrams – GCOR on page 11-6.** If the buzzer will not function when properly wired, replace the buzzer. **See Reverse Warning Buzzer Removal on page 13-31.**

TEST PROCEDURE 21 – Oil Level Sensor

See General Warnings on page 1-1.

NOTE: *Keep the battery connected while performing this test procedure.*

1. Place the neutral lockout cam in the MAINTENANCE position, put the Forward/Reverse handle in the NEUTRAL position, turn the key switch to the OFF position, disconnect the spark plug wire, and chock the wheels.

2. Ensure that the low oil warning light and all connecting wires are functioning correctly. **See Test Procedure 22 – Low Oil Warning Light on page 11-35.**
3. Drain the engine oil into an approved container and properly dispose of used oil.
4. Turn the key switch ON, closing the circuit. The low oil warning light should illuminate. If the low oil warning light does not illuminate, the oil level sensor needs to be replaced. **See Oil Level Sensor on page 13-40.**
5. Install a new oil filter and fill the engine with new oil before returning the vehicle to service. **See Engine Oil on page 10-4.**

TEST PROCEDURE 22 – Low Oil Warning Light

See General Warnings on page 1-1.

1. Disconnect battery and spark plug wire(s). **See Disconnecting the Battery – Gasoline Vehicles on page 1-3.**
2. Remove the instrument panel assembly. **See Key Switch Removal on page 13-26.**
3. Ensure that the wires are connected correctly and are tight. If they are not, rewire or tighten as necessary **(Figure 11-5, Page 11-10)**.
4. Disconnect the yellow wire (to the oil level sensor) from the terminal on the low oil warning light. Using an alligator clip jumper wire, connect the low oil warning light terminal to the vehicle frame. Connect the red (+) battery cable to the positive (+) battery post, then attach the black (–) cable to the negative (–) battery post.
5. Turn the key switch ON. The low oil warning light should illuminate. If it does not, check continuity between the yellow/white wire connection on the low oil warning light and the blue wire connection at the key switch. If there is no continuity in the wire, correct the problem. Then test the key switch. **See Test Procedure 4 – Key Switch (Starter Circuit) on page 11-16.** If the yellow/white wire and the key switch test okay, then replace the low oil warning light.

TEST PROCEDURE 23 – Neutral Lockout Cam

See General Warnings on page 1-1.

Check to be sure the lobes on the cam are pressing the neutral lockout limit switch lever as the Forward/Reverse handle is being shifted. The limit switch should make an audible click as it is pressed. If it does not, check for wear on the cam lobes. Be sure the cam has snapped fully back into place. If the cam lobes still do not activate the limit switch, replace the cam.

TEST PROCEDURE 24 – Battery Test (Under Load)

See General Warnings on page 1-1.

NOTE: *Keep the battery connected while performing this test procedure.*

1. Place the neutral lockout cam in the MAINTENANCE position, put the Forward/Reverse handle in the NEUTRAL position, and chock the wheels.
2. Set a multimeter to 20 volts DC and place the red (+) probe on the F2 (white wire) terminal on the starter/generator. Place the black (–) probe on the negative (–) battery post.
3. Place battery under load.
   3.1. Turn the key switch to the ON position, leave the Forward/Reverse shifter in the NEUTRAL position and press the accelerator pedal (with the accelerator pedal pressed, the battery is under load).
4. If the voltage reading is over 9.6 volts, with an electrolyte temperature of 70 °F (21 °C), check the starter/generator. **See following NOTE.**

NOTE: *The voltage reading listed is for electrolyte at 70 °F (21 °C). At lower electrolyte temperatures the voltage reading will be lower.*

5. If the reading is below 9.6 volts, with an electrolyte temperature of 70 °F (21 °C), check the battery. **See Test Procedure 1 – Battery on page 11-12.**
6. If the reading is zero, there may be no continuity across the large posts of the solenoid. **See Test Procedure 6 – Solenoid on page 11-18.**
7. If all of the test results are good and the voltage reading is zero, there may be a broken or damaged 6-gauge white wire from the solenoid to the starter/generator. **See Test Procedure 8 – Starter/Generator (Starter Function) on page 11-20.**

TEST PROCEDURE 25 – Fuel Level Sending Unit

See General Warnings on page 1-1.

⚠ WARNING

- **To avoid the possibility of fire or explosion, make sure the fuel tank cap is securely in place while performing this test procedure.**

1. Disconnect battery and spark plug wire(s). **See Disconnecting the Battery – Gasoline Vehicles on page 1-3.**
2. Disconnect the orange wire from the center post of the fuel level sending unit.
3. With a multimeter set to 2 k ohms, place the red (+) probe of the multimeter on the center post of the sending unit. Place the black (–) probe on the ground connection of the sending unit **(Figure 11-36, Page 11-36)**.

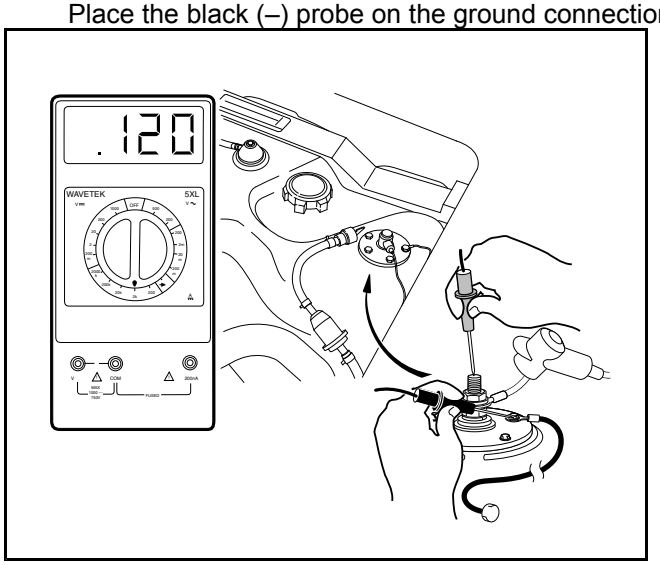

2428

Figure 11-36 Fuel Level Sending Unit Test

4. The following resistance readings (in ohms) should be obtained depending on the position of the float inside the fuel tank. The resistance reading will vary according to the exact position of the float. The chart below may be used as a guideline to determine if the fuel level sending unit is operating correctly. Make sure the float is at the surface of the fuel in the tank.

FLOAT POSITION	RESISTANCE READING	FUEL GAUGE READINGS
Lower position (tank empty)	240 ± 20 ohms	Empty
Center position (tank half full)	120 ± 20 ohms	Half full
Upper position (tank full)	60 ± 20 ohms	Full

5. If the readings are within the specifications listed above, the fuel level sending unit is working properly. If the readings are incorrect, the fuel level sending unit has failed and the fuel tank must be replaced.
6. If the readings are correct and the fuel gauge does not function correctly, check the continuity of the orange wire from the fuel level sending unit to the fuel gauge. Leave the battery disconnected while checking continuity. Also

check the continuity of the blue wire from the fuel gauge to the key switch, and the black ground wires at the fuel level sending unit and at the fuel gauge. **See Fuel Gauge Removal on page 13-34.**

7. If the readings are correct according to the position of the float, but give an incorrect reading on the fuel gauge, test the fuel gauge. **See Test Procedure 26 – Fuel Gauge on page 11-37.**

TEST PROCEDURE 26 – Fuel Gauge

See General Warnings on page 1-1.

1. Disconnect battery and spark plug wire(s). **See Disconnecting the Battery – Gasoline Vehicles on page 1-3.**
2. Remove the dash assembly to gain access to the back of the fuel gauge. **See Key Switch Removal on page 13-26.**
3. Disconnect the orange wire from the fuel gauge.
4. Set a multimeter to 20 volts DC and place the red (+) probe of the multimeter on the positive (+) post of the battery. Place the black (–) probe on the negative (–) post of the battery. Record the voltage reading.
5. Set a multimeter to 20 volts DC and place the red (+) probe of the multimeter on the (G) terminal of the fuel gauge with the blue wire. Place the black (–) probe on the (S) terminal of the fuel gauge with the black wire **(Figure 11-37, Page 11-37)**.
6. Connect the battery cables, positive (+) cable first, and tighten hardware to 144 in-lb (16.3 N·m).
7. Turn the key switch ON. The voltage reading should be the same as the battery voltage reading recorded earlier. If not, check the continuity of the blue and black wires **(Figure 11-37, Page 11-37)**.
8. The orange wire should remain disconnected for this step. With the black probe still on the terminal (S) of the fuel gauge, place the red (+) probe of the multimeter on the (I) terminal of the fuel gauge. The voltage reading should be the same as the full battery voltage reading obtained in step 4. If the reading is incorrect, replace fuel gauge **(Figure 11-38, Page 11-37)**.

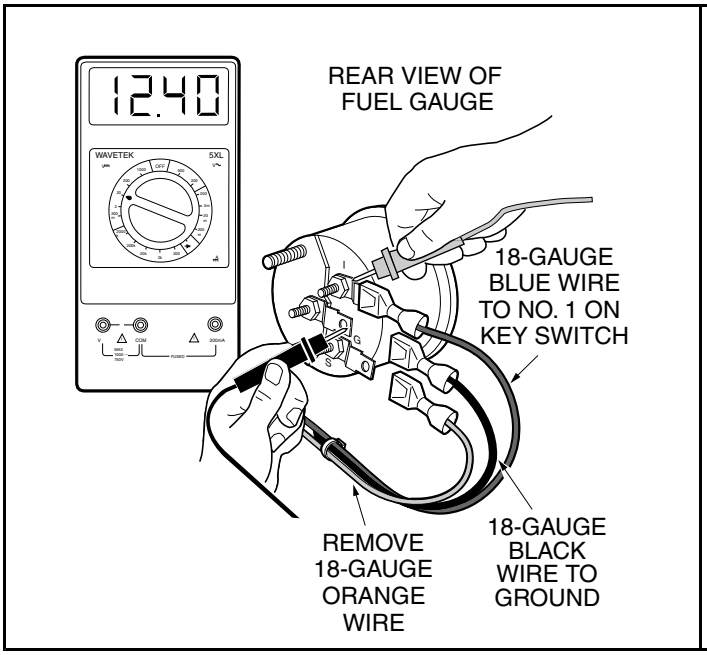

2429

Figure 11-37 Fuel Gauge Test

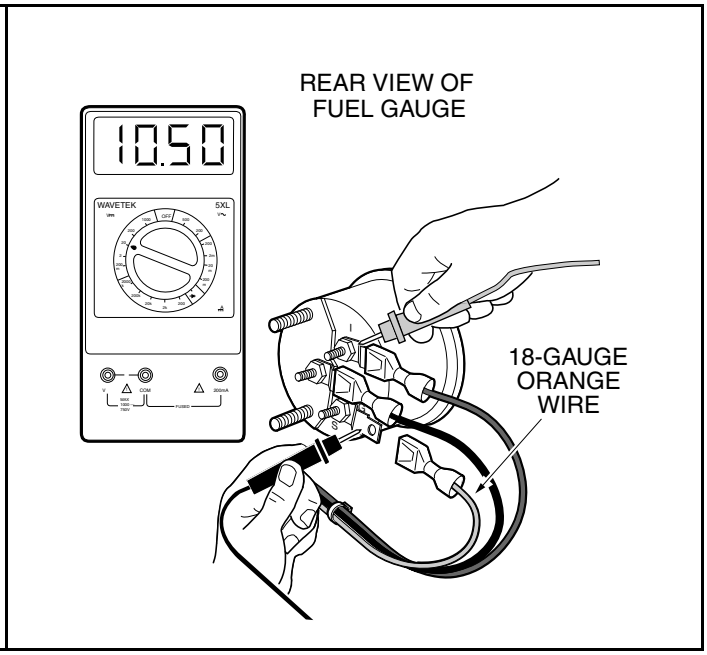

2430

Figure 11-38 Fuel Gauge Voltage Test

⚠ DANGER

- **See General Warnings on page 1-1.**

⚠ WARNING

- **See General Warnings on page 1-1.**

GENERAL INFORMATION

This section contains the information required to correctly troubleshoot the vehicle. A troubleshooting guide is provided for general troubleshooting. In addition to troubleshooting, this section contains general information on the electrical system and the circuits of the electrical system.

TROUBLESHOOTING GUIDE

The following troubleshooting guide will be helpful in identifying operating difficulties should they occur. The guide includes the symptom, probable cause(s) and suggested checks. The procedures used in making these checks can be found in the referenced sections in this maintenance and service manual.

TROUBLESHOOTING GUIDE		
SYMPTOM	**POSSIBLE CAUSES**	**REFER TO**
Engine does not start easily.	Spark plug is partially fouled or in poor condition	See Section 15 – AS26 FE 350 Engine.
	Spark plug wire is damaged or loose	See Section 15 – AS26 FE 350 Engine.
	Loose wire connection at ignition coil or RPM limiter	See Section 12 – Troubleshooting and Electrical System – TPS. Test Procedures 13 – *Ignition Spark*, 14 – *RPM Limiter* and 15 – *Ignition Coil*
	Intermittent ignition coil failure	See Section 12 – Troubleshooting and Electrical System – TPS. Test Procedures 13 – *Ignition Spark*, 14 – *RPM Limiter* and 15 – *Ignition Coil*
	Low cylinder compression	See Section 15 – AS26 FE 350 Engine.
	Water or dirt in the fuel system and/or carburetor; dirty or clogged fuel filter	See Section 16 – Fuel System.
	Carburetor improperly adjusted	See Section 16 – Fuel System.
	Starter/generator belt is slipping	Belt Tension Adjustment on page 13-23

TABLE CONTINUED ON NEXT PAGE

TROUBLESHOOTING GUIDE		
SYMPTOM	**POSSIBLE CAUSES**	**REFER TO**
Engine starts but does not run smoothly.	Spark plug is fouled or in poor condition	See Section 15 – AS26 FE 350 Engine.
	Spark plug wire is damaged or loose	See Section 15 – AS26 FE 350 Engine.
	Intermittent ignition coil failure	See Section 12 – Troubleshooting and Electrical System – TPS. Test Procedures 13 – *Ignition Spark*, 14 – *RPM Limiter* and 15 – *Ignition Coil*
	Water or dirt in the fuel system and/or carburetor; dirty or clogged fuel filter	See Section 16 – Fuel System.
	Fuel pump malfunction; fuel pressure to carburetor too low	See Section 16 – Fuel System.
Engine turns but fails to start.	Fuel tank is empty	See Section 16 – Fuel System.
	Fuel line or filters clogged	See Section 16 – Fuel System.
	Fouled spark plug	See Section 15 – AS26 FE 350 Engine.
	Spark plug wire damaged or loose	See Section 15 – AS26 FE 350 Engine.
	Loose wire connection at ignition coil or RPM limiter	See Section 12 – Troubleshooting and Electrical System – TPS. Test Procedures 13 – *Ignition Spark*, 14 – *RPM Limiter* and 15 – *Ignition Coil*
	Ignition coil or RPM limiter failed	See Section 12 – Troubleshooting and Electrical System – TPS. Test Procedures 13 – *Ignition Spark*, 14 – *RPM Limiter* and 15 – *Ignition Coil*
	Engine flooded with fuel as result of excess choking	Refer to the appropriate owner's manual. See Choke.
	Kill circuit grounded	See Section 12 – Troubleshooting and Electrical System – TPS. Test Procedures 5 – *Throttle Position Sensor*, 17 – *Key Switch (Engine Kill Circuit)*, 18 – *Engine Kill Wire*
	Fuel pump malfunction or failure	See Section 16 – Fuel System.
Engine overheats.	Fan screen is partially blocked or plugged	See Section 15 – AS26 FE 350 Engine.
	Governor is improperly adjusted	See Section 16 – Fuel System.
	Carburetor is too lean; check main jet size	See Section 16 – Fuel System.
Engine pre-ignites.	Excessive carbon deposits on piston head or in combustion chamber	See Section 15 – AS26 FE 350 Engine.
	Spark plug heat range is incorrect	See Section 15 – AS26 FE 350 Engine.
	Unsuitable or contaminated fuel	See Section 16 – Fuel System.

TABLE CONTINUED ON NEXT PAGE

TROUBLESHOOTING GUIDE		
SYMPTOM	**POSSIBLE CAUSES**	**REFER TO**
Loss of engine power.	Exhaust valve is restricted with carbon deposit	See Section 15 – AS26 FE 350 Engine.
	Muffler or exhaust pipe restricted with carbon or other substance	See Section 17 – Exhaust System.
	Ignition coil failed	See Section 12 – Troubleshooting and Electrical System – TPS. Test Procedures 13 – *Ignition Spark*, 14 – *RPM Limiter* and 15 – *Ignition Coil*
	Air filter is dirty or clogged	Fuel System on page 16-1
	Governor is improperly adjusted	Fuel System on page 16-1
	Throttle linkage out of adjustment	Fuel System on page 16-1
	Low cylinder compression	See Section 15 – AS26 FE 350 Engine.
	Spark plug failed	See Section 15 – AS26 FE 350 Engine.
	Restricted fuel flow	Fuel System on page 16-1
	Torque converter is not backshifting properly	See Section 19 – Torque Converter: Gasoline Vehicle.
Spark plug fouls repeatedly.	Incorrect plug	See Section 15 – AS26 FE 350 Engine.
	Spark plug wire is damaged	See Section 15 – AS26 FE 350 Engine.
	Unsuitable fuel, or incorrect (rich) fuel mixture	Fuel System on page 16-1
	Ignition coil failed	See Section 12 – Troubleshooting and Electrical System – TPS. Test Procedures 13 – *Ignition Spark*, 14 – *RPM Limiter* and 15 – *Ignition Coil*
	Dirt entering combustion chamber	Check intake system for leaks. Fuel System on page 16-1
	Rings are heavily worn, low cylinder pressure	See Section 15 – AS26 FE 350 Engine.
Carburetor floods.	Inlet valve or seat is leaking, dirty, worn, or damaged	Fuel System on page 16-1
	Float is damaged and filled with fuel	Fuel System on page 16-1
	Float needle valve not functioning properly	Fuel System on page 16-1
	Carburetor vent is clogged	Fuel System on page 16-1

TABLE CONTINUED ON NEXT PAGE

TROUBLESHOOTING GUIDE		
SYMPTOM	**POSSIBLE CAUSES**	**REFER TO**
Starter fails to operate.	Neutral lockout cam is in the wrong position	Test Procedure 7 – Neutral Lockout Limit Switch on page 12-19
	Fuse is blown	Test Procedure 2 – Fuse on page 12-14
	Battery is dead	Test Procedure 1 – Battery on page 12-12
	Starter control circuit is not operating	Test Procedure 8 – Starter/Generator (Starter Function) on page 12-20
	Starter/generator failed	Test Procedure 8 – Starter/Generator (Starter Function) on page 12-20
	Starter solenoid failed	Test Procedure 6 – Solenoid on page 12-18
	Throttle position sensor failed	Test Procedure 5 – Throttle Position Sensor on page 12-17
	Key switch failed	Test Procedure 4 – Key Switch (Starter Circuit) on page 12-16
	Neutral lockout limit switch failed	Test Procedure 7 – Neutral Lockout Limit Switch on page 12-19
	Loose or broken wire in starter/generator circuit	See Section 13 – Electrical Components.
	Cylinder and/or crankcase flooded with fuel	Fuel System on page 16-1
Starter/Generator does not charge battery.	Loose or broken wire in starter/generator circuit	Test Procedure 10 – Starter/Generator (Generator Function) on page 12-21
	Generator field coil is shorted	Test Procedure 10 – Starter/Generator (Generator Function) on page 12-21
	Brushes are worn or commutator is dirty	See Section 13 – Electrical Components.
	Starter/generator belt is loose or slipping	Belt Tension Adjustment on page 13-23
	Voltage regulator failed	Test Procedure 11 – Voltage Regulator on page 12-22
	Battery failed	Test Procedure 1 – Battery on page 12-12
Transmission does not engage or disengage smoothly.	Transmission shifter linkage is binding or is out of adjustment	See Section 18 – Unitized Transaxle.
	Idle RPM setting is set too high	Fuel System on page 16-1
	Insufficient (low) level of lubricant or wrong type of lubricant in transmission	See Section 18 – Unitized Transaxle.
	Internal gears are damaged or worn	See Section 18 – Unitized Transaxle.
	Synchronizer rings are worn, damaged or jammed	See Section 18 – Unitized Transaxle.

TABLE CONTINUED ON NEXT PAGE

TROUBLESHOOTING GUIDE		
SYMPTOM	**POSSIBLE CAUSES**	**REFER TO**
Excessive vehicle vibration.	Engine mounting nuts or bolts are loose	See Section 15 – AS26 FE 350 Engine.
	Snubber on frame is worn or damaged	See Section 15 – AS26 FE 350 Engine.
	Misaligned muffler mounting clamp	See Section 17 – Exhaust System.
	Damaged drive belt or starter belt	See Section 19 – Torque Converter: Gasoline Vehicle.
	Damaged drive clutch	See Section 19 – Torque Converter: Gasoline Vehicle.
	Damaged driven clutch	See Section 19 – Torque Converter: Gasoline Vehicle.
	Damaged starter/generator pulley	See Section 13 – Electrical Components.
	RPM setting is incorrect	Engine RPM Adjustment on page 16-8
Torque converter does not shift smoothly.	Drive belt is worn, cracked, glazed, or frayed	See Section 19 – Torque Converter: Gasoline Vehicle.
	Drive clutch malfunction	See Section 19 – Torque Converter: Gasoline Vehicle.
	Driven clutch malfunction	See Section 19 – Torque Converter: Gasoline Vehicle.
	Governor is sticking	See Section 18 – Unitized Transaxle.
Engine won't stop running.	Kill circuit wire is disconnected from the ignition coil	Test Procedure 12 – Disconnected Kill Wire on page 12-23
	Key switch failure	See Section 12 – Troubleshooting and Electrical System – TPS. , Test Procedures 4 – *Key Switch (Starter Circuit)*, 5 – *Throttle Position Sensor*
	Carburetor is too lean; check main and pilot jet sizes	Fuel System on page 16-1
	Carburetor throttle stop screw out of adjustment	Fuel System on page 16-1

WIRING DIAGRAMS – THROTTLE POSITION SENSOR

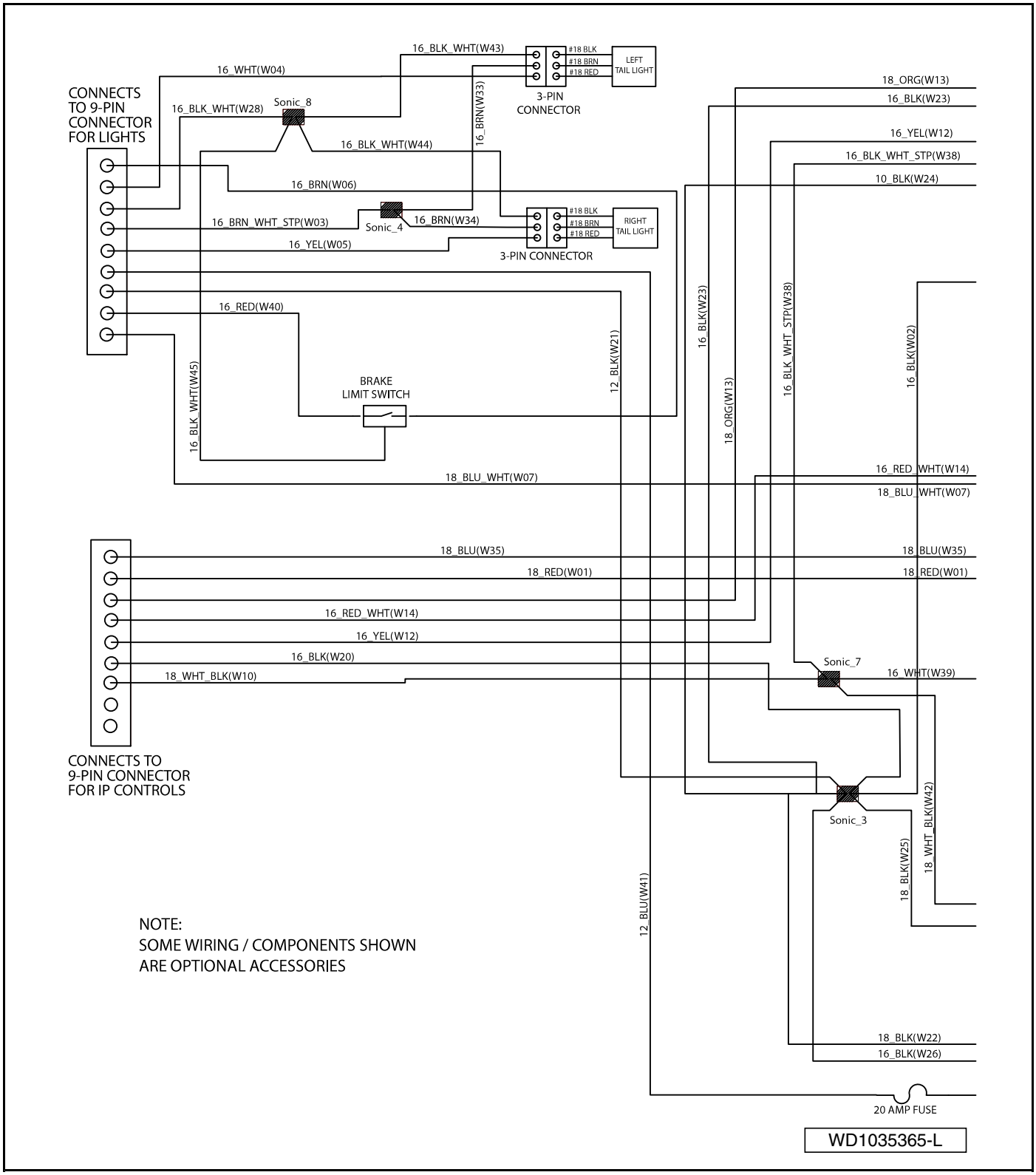

Figure 12-1 Wiring Diagram – Precedent Gasoline Vehicle with TPS

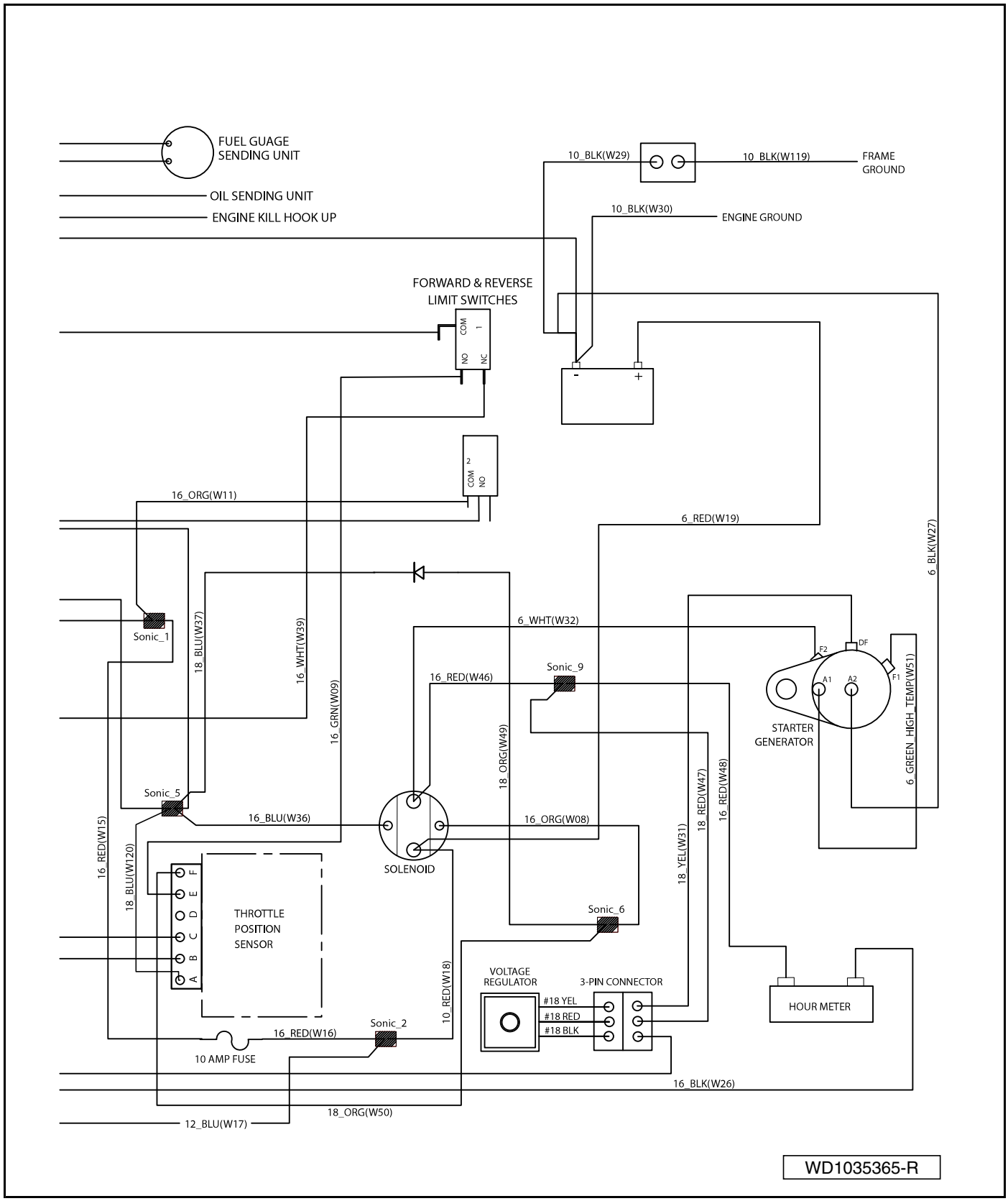

Figure 12-2 Wiring Diagram – Precedent Gasoline Vehicle with TPS

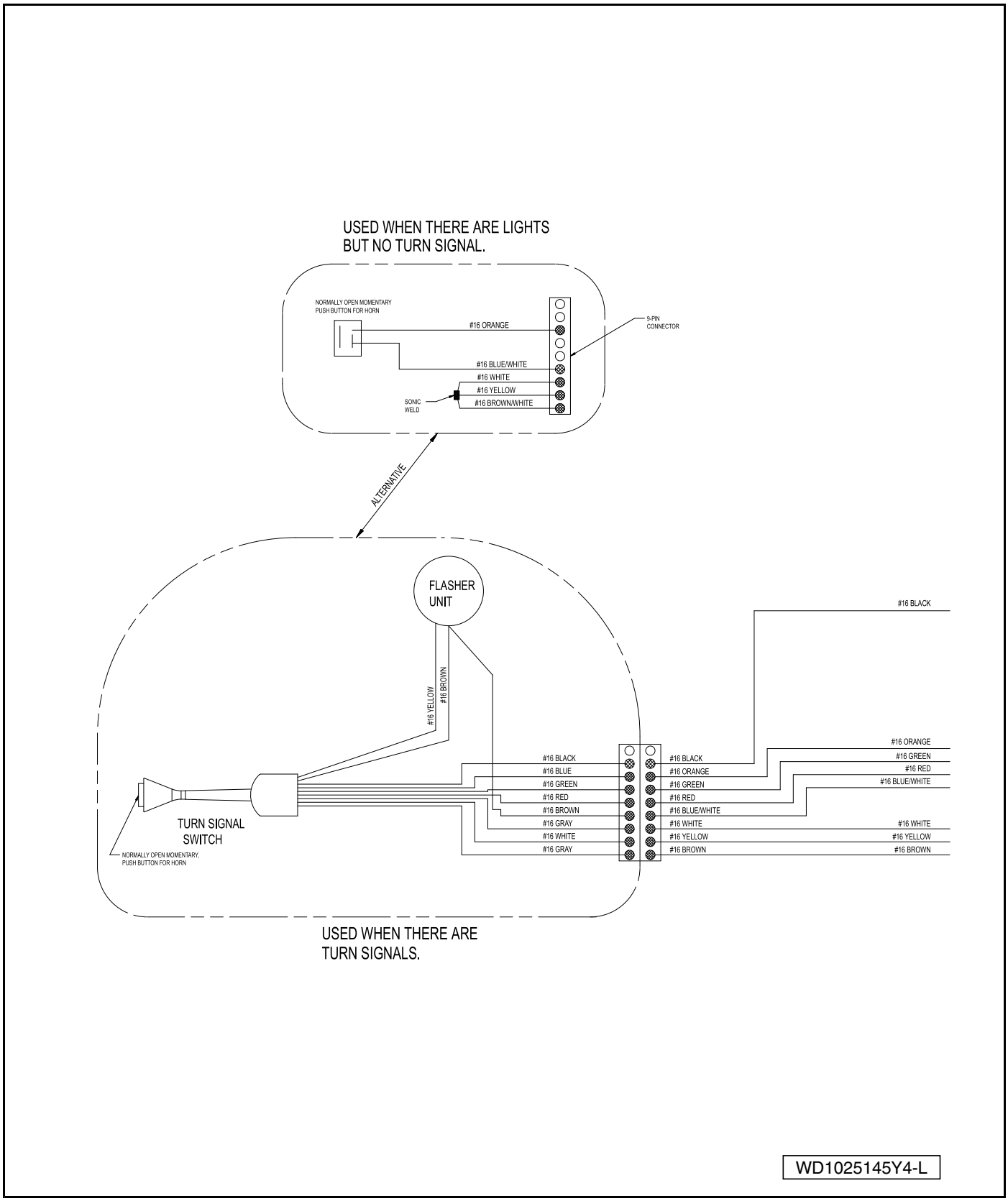

Figure 12-3 Precedent Gasoline Vehicle Accessory Wiring Diagram (Optional)

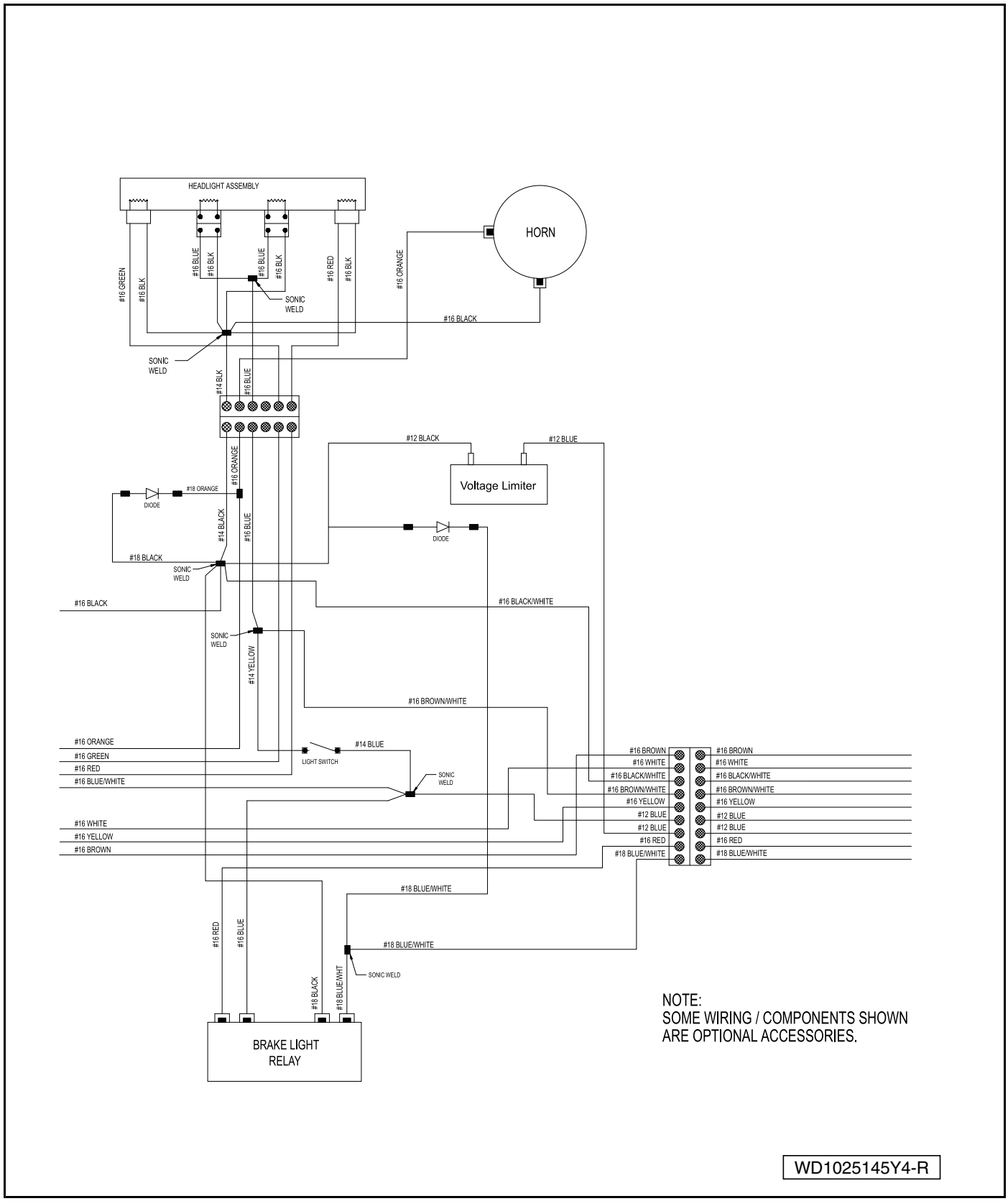

Figure 12-4 Precedent Gasoline Vehicle Accessory Wiring Diagram (Optional)

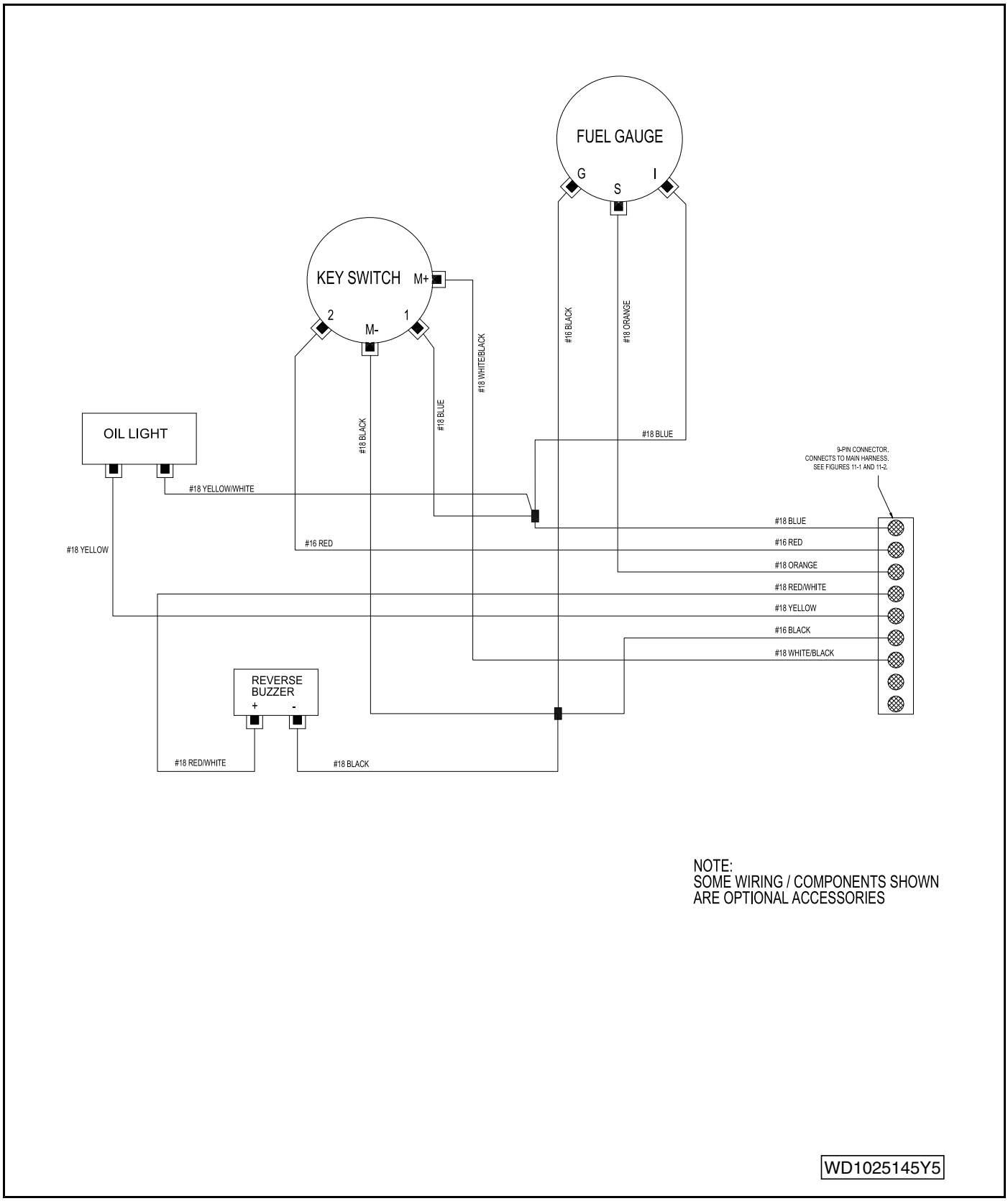

Figure 12-5 Precedent Gasoline Vehicle Instrument Panel Wiring Diagram

ELECTRICAL SYSTEM

The electrical system on the gasoline vehicle is 12 volts DC with negative (–) ground to frame, and consists of nine circuits that are easily identified:

- Starter Circuit
- Generator Circuit
- Engine Ignition Circuit
- Engine Kill Circuit
- Reverse Buzzer Circuit
- Low Oil Warning Light Circuit
- Neutral Lockout Circuit
- Fuel Gauge and Sending Unit Circuit
- Hour Meter Circuit

Recognizing and understanding the function of each of these circuits will help to quickly isolate the source of an electrical problem. Use the troubleshooting flow charts in the circuit testing section to find the proper test procedure to correct the electrical problem.

TEST PROCEDURES

Index of Test Procedures

1 – Battery
2 – Fuse
3 – Ground Cables
4 – Key Switch (Starter Circuit)
5 – Throttle Position Sensor
6 – Solenoid
7 – Neutral Lockout Limit Switch
8 – Starter/Generator (Starter Function)
9 – Wire Continuity
10 – Starter/Generator (Generator Function)
11 – Voltage Regulator
12 – Disconnected Kill Wire
13 – Ignition Spark
14 – RPM Limiter
15 – Ignition Coil
16 – Hour Meter
17 – Key Switch (Engine Kill Circuit)
18 – Engine Kill Wire
19 – Reverse Buzzer Limit Switch
20 – Reverse Buzzer
21 – Oil Level Sensor
22 – Low Oil Warning Light
23 – Neutral Lockout Cam
24 – Battery Test (Under Load)

25 – Fuel Level Sending Unit
26 – Fuel Gauge

TEST PROCEDURE 1 – Battery

See General Warnings on page 1-1.

⚠ DANGER

- **Due to the danger of an exploding battery, wear a full face shield and rubber gloves when working around a battery.**
- **Battery – Explosive gases! Do not smoke. Keep sparks and flames away from the vehicle and service area. Ventilate when charging or operating vehicle in an enclosed area. Wear a full face shield and rubber gloves when working on or near batteries.**
- **Battery – Poison! Contains acid! Causes severe burns. Avoid contact with skin, eyes, or clothing. Antidotes:**
  - **External: Flush with water. Call a physician immediately.**
  - **Internal: Drink large quantities of milk or water. Follow with milk of magnesia or vegetable oil. Call a physician immediately.**
  - **Eyes: Flush with water for 15 minutes. Call a physician immediately.**

NOTE: *The battery must be properly maintained and fully charged in order to perform the following test procedures. Battery maintenance procedures, including watering information and allowable mineral content, can be found in the Electrical Components section of this manual.* ***See Battery on page 13-40.***

1. Place the neutral lockout cam in the MAINTENANCE position, put the Forward/Reverse handle in the NEUTRAL position, and chock the wheels.
2. Check for loose or corroded battery terminal connections. Remove the negative (–) cable first and clean, tighten, and replace connections as necessary.

Hydrometer Test

A hydrometer (P/N 1011478) measures the specific gravity. The greater the specific gravity, the greater the state of charge of the battery. A fully charged battery should read between 1.250 and 1.280 at 80 °F (27 °C). Never add acid to the battery to obtain a higher specific gravity **(Figure 12-7, Page 12-13)**.

⚠ CAUTION

- **Do not allow battery acid from battery caps or hydrometer to drip onto the body. Battery acid will cause permanent damage. Wash off immediately.**

Performing the Hydrometer Test

1. Be sure that the battery has sufficient water to cover the plates by approximately 1/2 inch (12.7 mm) and is fully charged prior to beginning the test. If water must be added, recharge the battery before performing the hydrometer test **(Figure 12-6, Page 12-13)**.
2. Remove the vent cap.
3. Using a battery thermometer (P/N 1011767), record the electrolyte temperature of a center cell.

4. Squeeze the rubber bulb of the hydrometer and insert into the cell. Slowly release the bulb, drawing electrolyte up into the glass tube of the hydrometer.
5. When the float rises off the bottom, adjust the electrolyte level so that the float rides free of the bottom but does not strike the bottom of the rubber bulb. Remove the hydrometer from the cell and release the pressure from the bulb.
6. Hold the hydrometer vertically, ensuring that the float is not contacting the sides of the glass tube. Hold the hydrometer at eye level and read the scale at the level of electrolyte **(Figure 12-7, Page 12-13)**.
7. Record the reading.
8. Return the electrolyte to the cell from which it was taken. Replace vent cap.
9. Repeat steps 2 through 8 on all cells.

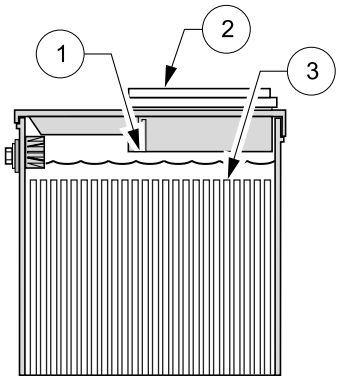

1. Level Indicator 2. Cap 3. Plates
Electrolyte level at least 1/2 inch (13 MM) above plates or to level indicator.

22

Figure 12-6 Battery Electrolyte Level

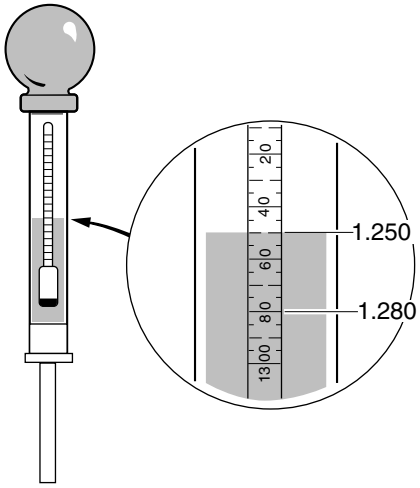

View at eye level.

717

Figure 12-7 Hydrometer Test

Hydrometer Calibration

Most hydrometers are calibrated to read correctly at 80 °F (27 °C). The readings obtained as described above must be corrected for temperature. For each 10 °F (5.6 °C) above 80 °F (27 °C), add 0.004 to the reading. For each 10 °F (5.6 °C) below 80°F (27 °C), subtract 0.004 from the reading.

Interpreting the Results of the Hydrometer Test

The approximate state of charge can be determined by referring to the following table:

SPECIFIC GRAVITY (TEMPERATURE CORRECTED)	APPROXIMATE STATE OF CHARGE
1.250-1.280	100%
1.220-1.240	75%
1.190-1.210	50%
1.160-1.180	25%

If the difference between the cells is 0.020 or more, the low cell should be suspected. It may require a catch-up charge or it may be a weak cell. When the variations between cells reach 0.050 or more, the battery should be replaced.

Voltage Test

Take a voltage reading with a multimeter set to 20 VDC by placing the red (+) probe on the positive (+) battery post and the black (–) probe on the negative (–) battery post. If it shows less than 12.4 volts, or if the lowest specific gravity

reading from the Hydrometer Test is less than 1.225, recharge the battery. If battery voltage is greater than 12.4 volts and specific gravity is greater than 1.225, the problem is not with the battery. If the battery does not reach 12.4 volts, or if the specific gravity of a cell is still less than 1.225 after charging, replace the battery. **See following NOTE.**

NOTE: *A fully charged battery that is in good condition should have a specific gravity of at least 1.225 in all cells, and the difference in the specific gravity of any two cells should be less than 50 points. Open circuit voltage should be at least 12.4 volts.*

Load Test

1. Connect a 160-ampere load tester to the battery posts.
2. Turn the switch on the load tester to the ON position.
3. Read the battery voltage after the load tester has been turned on for 15 seconds. Compare the battery's voltage reading with the following table. Make sure you have the correct ambient temperature.

IF TEMPERATURE IS	MINIMUM CRANKING VOLTAGE
70 °F (20 °C and above)	9.6 V
60 °F (16 °C)	9.5 V
50 °F (10 °C)	9.4 V
40 °F (4 °C)	9.3 V
30 °F (-1 °C)	9.1 V
20 °F (-7 °C)	8.9 V
10 °F (-12 °C)	8.7 V
0 °F (-18 °C)	8.5 V

4. If the battery is found to be good, or if the electrical problem continues after the battery has been replaced with a good one, test the electrical circuits.

TEST PROCEDURE 2 – Fuse

See General Warnings on page 1-1.

The fuse (red 10 amp) is located in the wiring harness **(Figure 12-8, Page 12-15)**.

1. Disconnect battery. **See Disconnecting the Battery – Gasoline Vehicles on page 1-3.**
2. Remove the cover from in-line fuse.
3. Ensure that the wires are connected correctly and are tight. If they are not, rewire or tighten as necessary.
4. Remove fuse to be tested from the fuse holder. **See Fuse Removal on page 13-28.**
5. Connect the probes of a multimeter, set to 200 ohms, to the fuse terminals. The reading should be continuity. If there is no continuity, determine and repair the cause of the fuse failure. Replace the fuse with a properly rated new one.

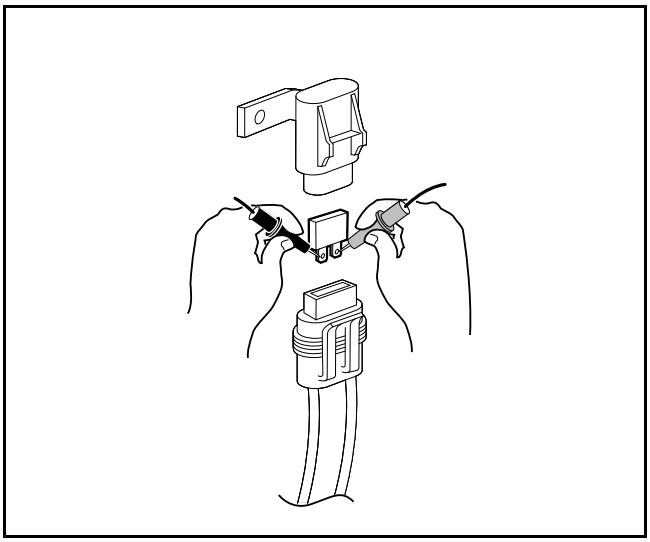

2418

Figure 12-8 Fuse

TEST PROCEDURE 3 – Ground Cables

See General Warnings on page 1-1.

1. Disconnect battery and spark plug wire(s). **See Disconnecting the Battery – Gasoline Vehicles on page 1-3.**
2. Check the starter/generator ground cable.
   2.1. Set the multimeter to 200 ohms. Place the red (+) probe on the A2 terminal of the starter/generator and place the black (–) probe on the vehicle frame **(Figure 12-9, Page 12-15)**. The reading should be continuity. If there is no continuity, clean and tighten cable connections. If the connections are good, repair or replace the cable.
3. Check the engine ground cable.
   3.1. Place the red (+) probe of the multimeter on the ground cable terminal end located on the oil filler bracket on the engine **(Figure 12-10, Page 12-15)**. Place the black (–) probe on the vehicle frame. The reading should be continuity. If the reading is incorrect, clean and tighten cable connections. If the connections are good and the reading is incorrect, repair or replace the cable.

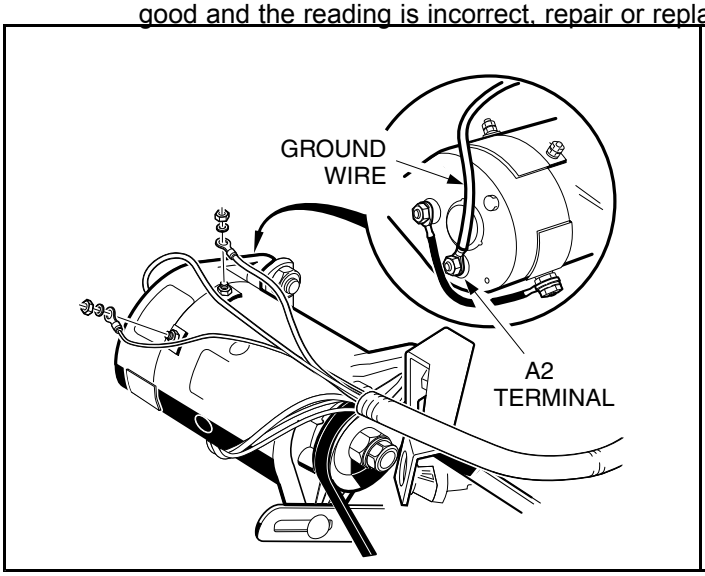

2419

Figure 12-9 Starter/Generator Ground Cable Test

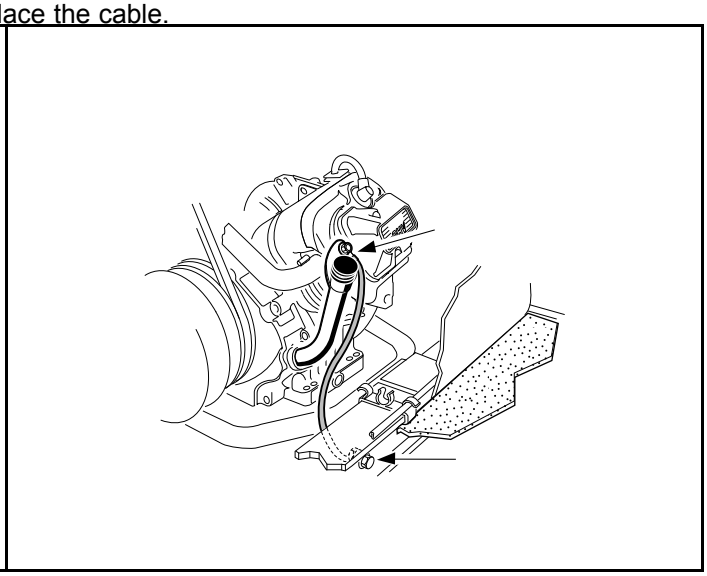

1700-19700-10372

Figure 12-10 Engine Ground Cable Test

4. Check the battery ground cable.

4.1. Four 10-gauge black wires are crimped together and connected to the negative (–) battery post. One of these wires is connected via a single position in-line connector to the frame. The frame connection should be clean and tight. Visual inspection of the connection on the frame is very difficult. The best check for tightness is to pull on the black cable. If the cable moves at the connection end, disassemble the frame connection and clean the bolt, ring terminal, and nut. Reinstall the frame connection.

4.2. Set the multimeter to 200 ohms. Place the red (+) probe on the unconnected end of the 6-gauge black cable, and place the black (–) probe on the vehicle frame **(Figure 12-11, Page 12-16)**. The reading should be continuity. If the reading is incorrect, ensure that terminal connections are clean and tight. If the connections are good and the reading is incorrect, check that the in-line connector is secure, repair or replace the cable.

5. Check the fuel tank ground.

5.1. A 16-gauge wire runs from the fuel tank to the wire harness where it is sonically welded to the other ground wires. Check the ground connection at the fuel tank.

5.2. Set the multimeter to 200 ohms. Place the red (+) probe on the terminal for the fuel tank ground connection, and place the black (–) probe on the vehicle frame **(Figure 12-12, Page 12-16)**. The reading should be continuity. If there is no continuity, clean and tighten all cable connections. If the connections are good, repair or replace the cable.

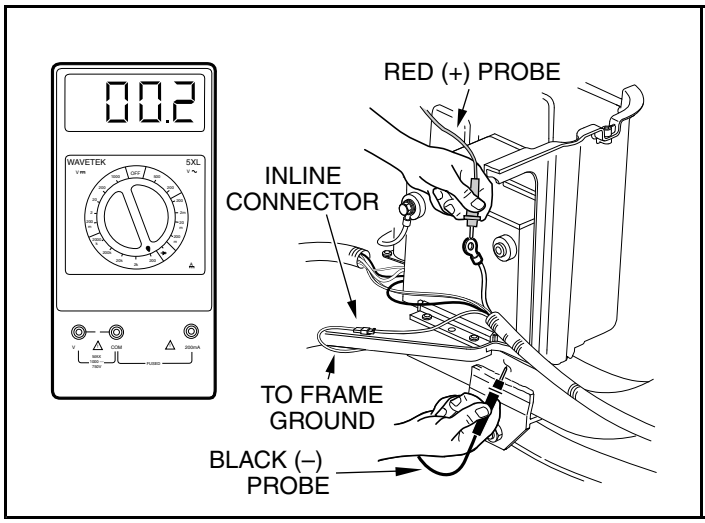

2420
Figure 12-11 Battery Ground Cable Test

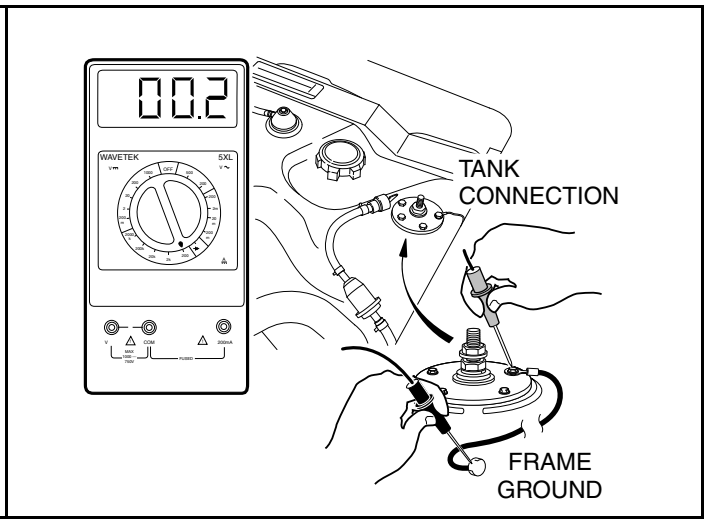

2421
Figure 12-12 Fuel Tank Ground

TEST PROCEDURE 4 – Key Switch (Starter Circuit)

See General Warnings on page 1-1.

1. Disconnect battery and spark plug wire(s). **See Disconnecting the Battery – Gasoline Vehicles on page 1-3.**
2. Remove the instrument panel assembly. **See Key Switch Removal on page 13-26.**
3. Ensure that the wires are connected correctly and are tight. If they are not, rewire or tighten as necessary.
4. Insert the key and turn the switch to ON. Place the red (+) probe of the multimeter on the No. 2 terminal and the black (–) probe on the No. 1 terminal of the key switch. The reading should be continuity. If the reading is incorrect, replace the key switch **(Figure 12-13, Page 12-17)**.

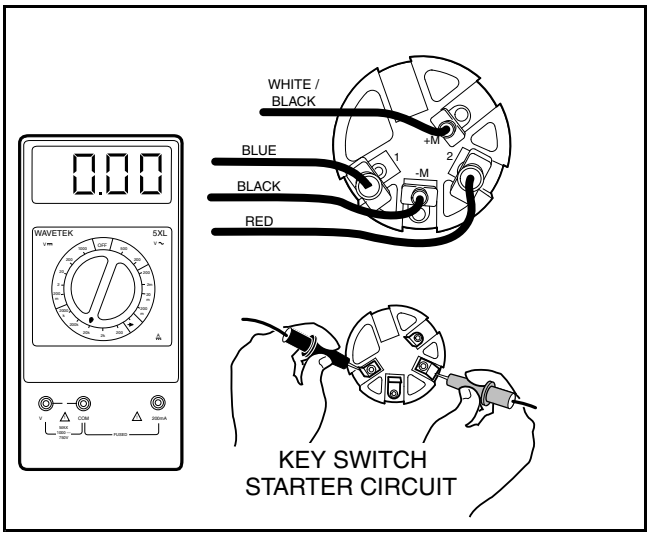

2422
Figure 12-13 Test Key Switch – Engine Starter Circuit

TEST PROCEDURE 5 – Throttle Position Sensor

The throttle position sensor performs the function of two limit switches: the accelerator pedal limit switch and the kill limit switch. This sensor is sealed and is not to be repaired or replaced. If sensor is determined to need replacing through test procedures found in this manual, the accelerator pedal assembly must be replaced. **See Accelerator Pedal Removal on page 5-9.** The sensor is joined to the main wire harness through a six-pin connector. Tests for the sensor are found in the following two procedures.

Accelerator Pedal Limit Switch Function

See General Warnings on page 1-1.

The green and orange wires connect to the accelerator pedal limit switch function of the throttle position sensor. This is the normally open (NO) portion of the circuit used to energize the starter solenoid.

NOTE: *Keep the battery connected while performing this test procedure.*

1. Place the neutral lockout cam in the MAINTENANCE position, put the Forward/Reverse handle in the NEUTRAL position, and chock the wheels.
2. Disconnect the spark plug wire from the spark plug.
3. Disconnect white/black wire bullet connector located at the engine RPM limiter **(Figure 12-21, Page 12-24)**.
4. With battery connected and using a multimeter set to the diode test function (ç), attach the red (+) lead to the orange wire at the starter solenoid and the black (-) lead to the green wire at the limit switch located on the Forward/Reverse shifter assembly. **See following NOTE.**

NOTE: *It may be necessary to partially pull the green wire from the switch terminal to attach the black lead.*

5. Turn the key switch to the ON position. With accelerator pedal at rest in the fully raised position, the meter should indicate an over limit (no continuity) condition.
6. Press the accelerator to engage the starter and engine. With accelerator pedal pressed, the meter should indicate approximately 1.0 volt. If either reading is incorrect, replace the accelerator pedal assembly. **See Accelerator Pedal Removal on page 5-9.**

Kill Limit Switch Function

See General Warnings on page 1-1.

The black and white/black wires connect to the kill limit switch function of the throttle position sensor. This is the normally closed (NC) portion of the circuit used to ground the ignition and shut the engine off when the pedal is released.

NOTE: *Keep the battery connected while performing this test procedure.*

1. Place the neutral lockout cam in the MAINTENANCE position, put the Forward/Reverse handle in the NEUTRAL position, and chock the wheels.
2. Disconnect white/black wire bullet connector located at the engine RPM limiter **(Figure 12-21, Page 12-24)**.
3. Disconnect the spark plug wire from the spark plug.
4. With battery connected and using a multimeter set to the diode test function (ç), attach the red (+) lead to the negative (–) battery terminal and the black (-) lead to the white wire at the limit switch located on the Forward/Reverse shifter assembly. **See following NOTE.**

NOTE: *It may be necessary to partially pull the white wire from the switch terminal to attach the black lead.*

5. Turn the key switch to the ON position. With accelerator pedal at rest in the fully raised position, the meter should indicate approximately 1.0 volt.
6. Press the accelerator to engage the starter and engine. With accelerator pedal pressed, the meter should indicate an over limit (no continuity) condition. If either reading is incorrect, replace the accelerator pedal assembly. **See Accelerator Pedal Removal on page 5-9.**

TEST PROCEDURE 6 – Solenoid

See General Warnings on page 1-1.

1. Disconnect battery and spark plug wire(s). **See Disconnecting the Battery – Gasoline Vehicles on page 1-3.**
2. Ensure that the wires are connected correctly and are tight. If they are not, rewire or tighten as necessary.
3. Set a multimeter to 200 ohms. Place the red (+) probe on one of the small posts of the solenoid and place the black (–) probe on the other small post. The reading should be 14 to 16 ohms. If the reading is not within limits, replace the solenoid.
4. Remove the 10-gauge white wire (crimped with a 16-gauge red wire) from the large post of the solenoid. Do not allow the wires to touch the frame or other components of the vehicle **(Figure 12-14, Page 12-18)**.

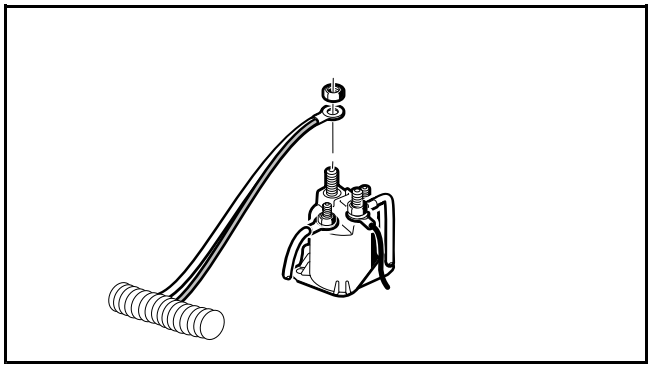

2424

Figure 12-14 Solenoid Wire Removal

5. Set the multimeter to 200 ohms. Connect the red (+) probe to one of the large posts of the solenoid and connect the black (–) probe to the other large post **(Figure 12-15, Page 12-19)**.

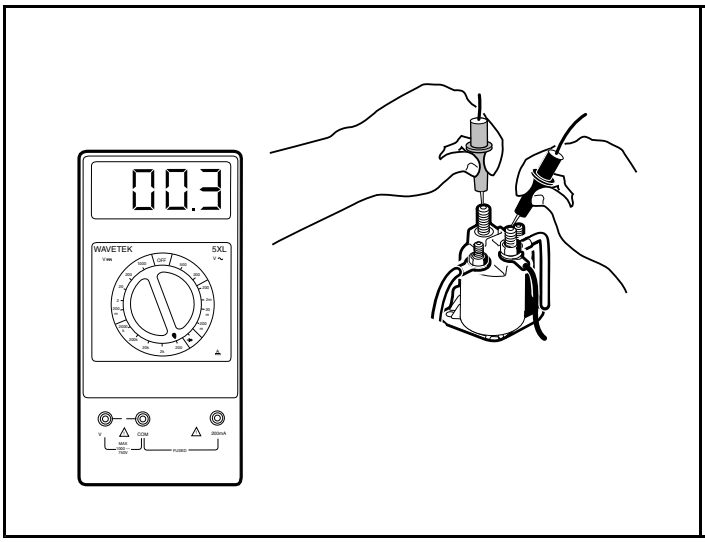

2425
Figure 12-15 Solenoid Continuity Test

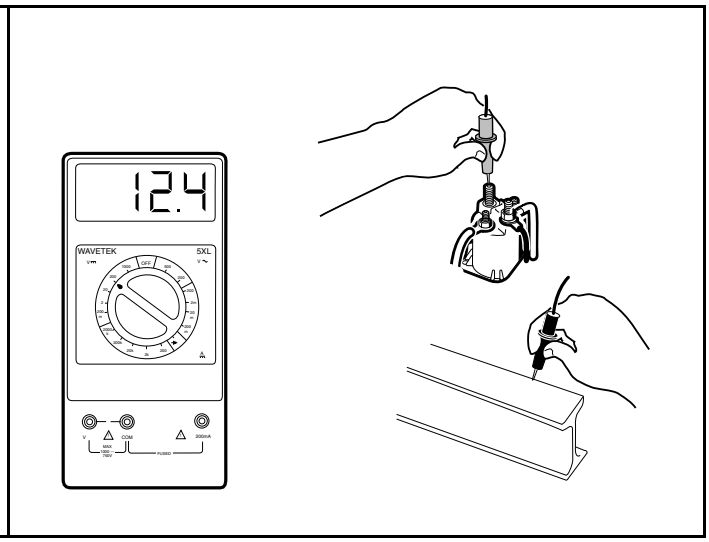

2426
Figure 12-16 Solenoid Ground Test

6. Connect battery and spark plug wire(s). **See Connecting the Battery – Gasoline Vehicles on page 1-3.**
7. Place the Forward/Reverse handle in NEUTRAL, and place the neutral lockout cam in the MAINTENANCE position. Turn the key switch to the ON position. With the accelerator in the UP position, the reading on the multimeter should be no continuity. Press the accelerator pedal and listen for the solenoid click. There should be continuity. If either reading is incorrect, replace the solenoid.
8. With the Forward/Reverse handle still in NEUTRAL and the neutral lockout cam in the MAINTENANCE position, set the multimeter to 20 volts DC and place the red (+) probe on the large post that does not have wires connected to it. Place the black (–) probe on the vehicle frame. Turn key switch to the ON position, press accelerator pedal, and listen for solenoid click. The meter should read full battery voltage. If the reading is incorrect, replace the solenoid **(Figure 12-16, Page 12-19)**.
9. Disconnect the 10-gauge black cables from the negative (–) post of the battery before reconnecting the wires to the solenoid.

TEST PROCEDURE 7 – Neutral Lockout Limit Switch

See General Warnings on page 1-1.

This switch is located on the Forward/Reverse switch assembly. There is a black wire, a green wire, and a white wire connected to this limit switch.

1. Disconnect battery and spark plug wire(s). **See Disconnecting the Battery – Gasoline Vehicles on page 1-3.**
2. Check for proper wiring and tight connections.
3. Set the multimeter to 200 ohms. Place the red (+) probe of the multimeter on the common (COM) terminal of the limit switch. Place the black (–) probe on the normally open (NO) terminal of the switch. Without the lever pressed, the reading should be no continuity. Press the lever, and the reading should be continuity. If either reading is incorrect, replace the limit switch **(Figure 12-17, Page 12-20)**.

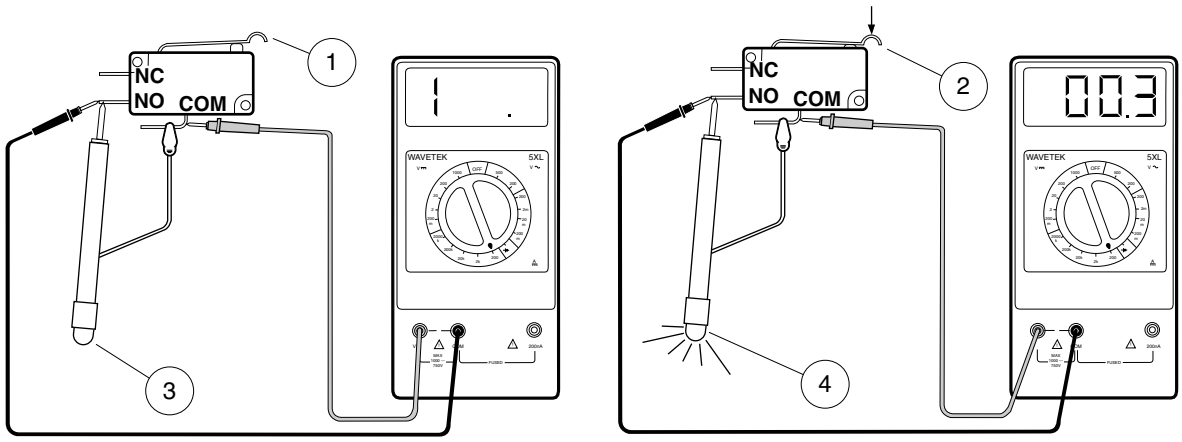

1. Lever Up 2. Lever Depressed 3. Tester light is OFF. Meter reads 1. 4. Tester light is ON. Meter reads approx. zero ohms.

460

Figure 12-17 Test Neutral Lockout Switch

4. Check to be sure the lobes on the cam are pressing the neutral lockout limit switch as the Forward/Reverse handle is being shifted. The limit switch should make an audible click as it is pressed. If it does not, check for wear on the cam lobes. Be sure the cam snaps fully back into place. If the cam lobes still do not activate the limit switch, replace the cam.

TEST PROCEDURE 8 – Starter/Generator (Starter Function)

See General Warnings on page 1-1.

1. Disconnect battery and spark plug wire(s). **See Disconnecting the Battery – Gasoline Vehicles on page 1-3.**
2. Ensure that wires are connected correctly and are tight. If they are not, rewire or tighten as necessary.
3. Disconnect the wires from all the terminals on the starter/generator. Then place the black (–) probe of a multimeter, set to 200 ohms, on the starter/generator housing (scratch through the paint to ensure a good ground). While holding the black (–) probe against the housing, place the red (+) probe (one at a time) on the A1, A2, F1, F2 and DF terminals respectively **(Figure 12-18, Page 12-21)**. The readings should be no continuity. If the readings are incorrect, the starter/generator will need to be removed from the vehicle and disassembled by a qualified technician. See Section 13 – Electrical Components.
   – An incorrect reading from A1 or A2 terminal indicates three possible problems: 1) a grounded A1 or A2 terminal, 2) a grounded wire in the brush area, or 3) a grounded armature/commutator.
   – If the F1 or F2 reading is incorrect, it indicates a possible grounded F1 or F2 terminal or a grounded field coil.
   – If the DF reading is incorrect, it indicates a possible grounded DF terminal or a grounded field coil.
4. Disconnect the ground wire from the A2 terminal and the green wire from the A1 terminal on the starter/generator.

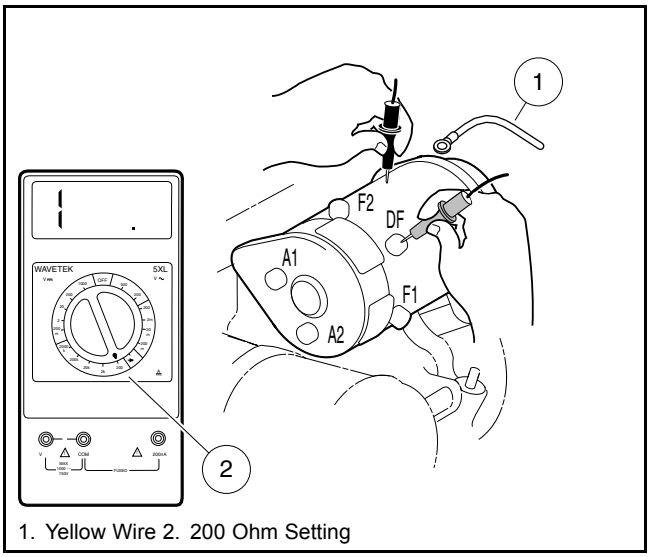

1. Yellow Wire 2. 200 Ohm Setting

461
Figure 12-18 Check Terminal Continuity – Model G425419 shown

5. Using a multimeter set to 200 ohms, place the red (+) probe on the A1 terminal and the black (–) probe on the A2 terminal. The reading should be continuity. If the reading is incorrect, a possible open or poor contact in a brush assembly and/or open armature windings may be the cause. The starter/generator will need to be removed from the vehicle and disassembled by a qualified technician. See Section 13 – Electrical Components.
6. With the wires still disconnected, using a multimeter set on 200 ohms, place the red (+) probe on the F1 terminal and the black (–) probe on the F2 terminal. The reading should be between approximately .1 and .3 ohms. If the reading is incorrect, a possible open field coil or bad connections at terminals may be the cause. The starter/generator will need to be removed from the vehicle and disassembled by a qualified technician. See Section 13 – Electrical Components.
7. With the wires still disconnected, using a multimeter set on 200 ohms, place the red (+) probe on the DF terminal and the black (–) probe on the F1 terminal. The reading should be between 4.5 and 5.5 ohms.If the reading is incorrect, a possible grounded DF terminal and/or grounded field coil may be the cause. The starter/generator will need to be removed from the vehicle and disassembled by a qualified technician. See Section 13 – Electrical Components.

TEST PROCEDURE 9 – Wire Continuity

See General Warnings on page 1-1.

1. Disconnect battery and spark plug wire(s). **See Disconnecting the Battery – Gasoline Vehicles on page 1-3.**
2. To test a wire for continuity, disconnect either end from the electrical component it is attached to.
3. Set the multimeter to 200 ohms and place the red (+) probe on the terminal at one end of the wire. Place the black (–) probe on the other terminal end of the wire. The reading should be continuity. If the reading is incorrect, repair or replace the wire.

TEST PROCEDURE 10 – Starter/Generator (Generator Function)

See General Warnings on page 1-1.

NOTE: *Keep the battery connected while performing this test proc edure.*

1. Place the neutral lockout cam in the MAINTENANCE position, put the Forward/Reverse handle in the NEUTRAL position, and chock the wheels.

2. Ensure that the wires are connected correctly and are tight. If they are not, rewire or tighten as necessary.
3. Disconnect the yellow wire from the DF terminal on the starter/generator. Cover the connector on the yellow wire to make sure the yellow wire will not short to ground. Then, using a jumper wire, ground the DF terminal to the A2 terminal **(Figure 12-19, Page 12-22)**.
4. Using a multimeter set to 20 volts DC, place the red (+) probe on the positive (+) post of the battery, and place the black (–) probe on the negative (–) post. Turn the key switch to ON position, press the accelerator pedal to start the engine and run it at full governed speed. The reading should show the voltage rising on the meter. If the voltage rises above 15.3 volts DC, test the voltage regulator. **See Test Procedure 11 – Voltage Regulator on page 12-22.** If the voltage does not rise, a tear-down inspection of the starter/generator will be necessary. See Section 13 – Electrical Components.
5. Connect the yellow wire to the DF terminal on the starter/generator.

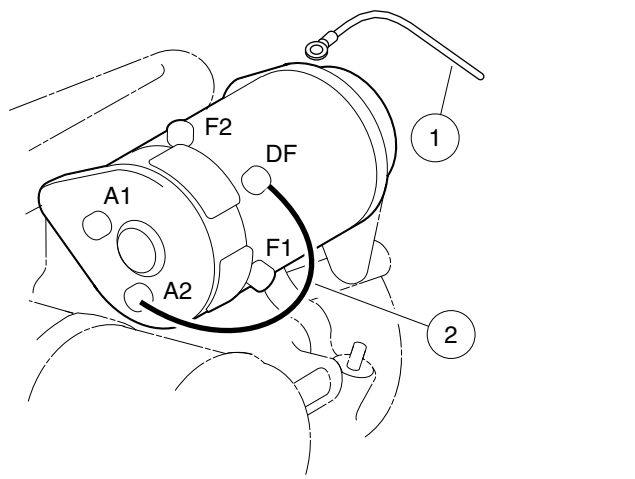

1. Yellow Wire 2. Jumper Wire

462
Figure 12-19 Jumper Wire Ground DF to A2 – Model G425419 shown

TEST PROCEDURE 11 – Voltage Regulator

See General Warnings on page 1-1.

NOTE: *Keep the battery connected while performing this test procedure.*

1. Place the neutral lockout cam in the MAINTENANCE position, put the Forward/Reverse handle in the NEUTRAL position, and chock the wheels.
2. Ensure that the wires are connected correctly and are tight. If they are not, rewire or tighten as necessary.
3. Check the engine RPM setting to ensure that it is correctly adjusted. **See Engine RPM Adjustment on page 16-8.**
4. With the battery in good condition and fully charged, run the engine for several minutes to bring the voltage regulator to operating temperature.
5. Turn the key switch to OFF, killing the engine. Using a multimeter set to 20 volts DC, place the red (+) probe on the large post of the solenoid with the red and white wires crimped together from the voltage regulator attached. Place the black (–) probe on the negative (–) battery post **(Figure 12-20, Page 12-23)**. Turn the key switch to the ON position. Press the accelerator to start the engine and run it at full governed speed. If the reading is between 14.7 and 15.3 volts, the regulator is good. If the reading is lower than 14.7 volts but rising steadily, check battery condition. **See Test Procedure 1 – Battery on page 12-12.** If the reading is lower than 14.7 volts and not rising, and the starter/generator is good; or if the reading is over 15.3 volts and continues to rise, replace voltage regulator. **See Voltage Regulator Removal on page 13-25.**

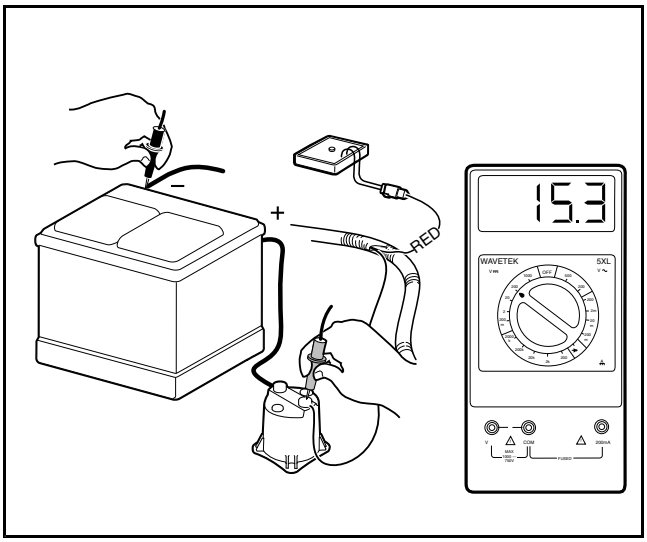

2427

Figure 12-20 Voltage Regulator Test

TEST PROCEDURE 12 – Disconnected Kill Wire

See General Warnings on page 1-1.

NOTE: *Keep the battery connected while performing this test procedure.*

1. Place the neutral lockout cam in the MAINTENANCE position, put the Forward/Reverse handle in the NEUTRAL position, and chock the wheels.
2. Disconnect the engine kill white/black wire at the bullet connector located next to the RPM limiter **(Figure 12-21, Page 12-24)**.
3. With the neutral lockout cam in the MAINTENANCE position, turn the key switch to the ON position. In a well ventilated area, depress the accelerator to start the engine.
4. If the engine begins to run, test the engine kill circuit for a shorted wire or other failed components in the engine kill circuit. **See following WARNING.**

⚠ WARNING

- **When the white/black engine kill wire is disconnected, the engine will not stop running after the accelerator pedal is released. It will be necessary to press and hold the choke cover closed until the engine stops running.**

5. If the engine does not run, proceed to Test Procedure 13 – Ignition Spark on page 12-24.

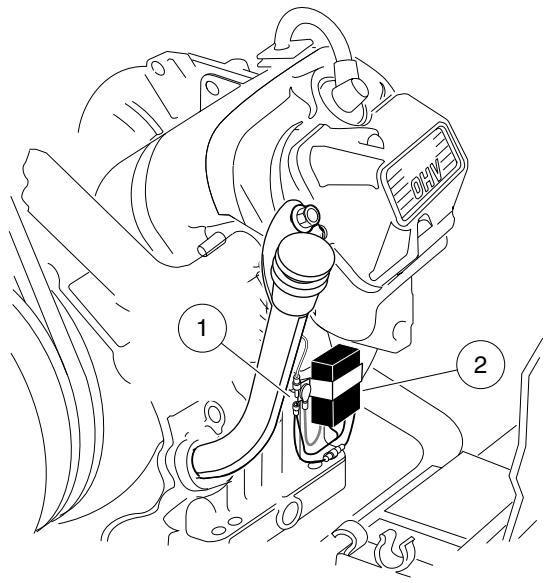

1. Disconnect White/Black Engine Kill Wire 2. RPM Limiter

465
Figure 12-21 Disconnect White/Black Engine Kill Wire

TEST PROCEDURE 13 – Ignition Spark

See General Warnings on page 1-1.

NOTE: *Keep the battery connected while performing this test procedure.*

1. Place the neutral lockout cam in the MAINTENANCE position, put the Forward/Reverse handle in the NEUTRAL position, and chock the wheels.
2. Remove the plug wire from the spark plug. Using an ignition spark gap test tool (Thexton 404® or equivalent), check for correct spark **(Figure 12-22, Page 12-25)**.
   - 2.1. Adjust the tester probes to approximately to 18,000 volts (18 Kv) setting (SE – *Small Engine Setting* on the Thexton 404 tool). Connect the tester to the spark plug wire, and connect the alligator clip to a solid engine ground.
   - 2.2. Turn the key switch to the ON position and crank the engine by pressing the accelerator. There should be a strong blue spark between the probes of the spark gap tester. If there is no spark, or if the spark is a faint yellow or red color, test components of the ignition circuit. **See Test Procedure 15 – Ignition Coil on page 12-27.**

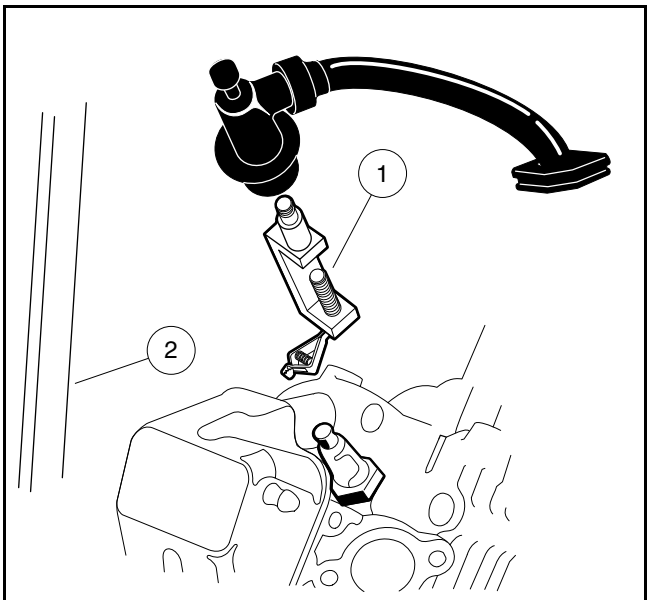

1. Ignition Gap Test Tool 2. Chassis

464

Figure 12-22 Ignition Spark Test

3. If the spark gap tester tool indicates a strong blue spark, it is possible the spark plug has failed internally. Check the spark plug gap. The gap should be set at 0.027 to 0.031 of an inch (0.69 to 0.79 mm). If the gap is correct, replace the spark plug with a new part and test the engine for proper operation.

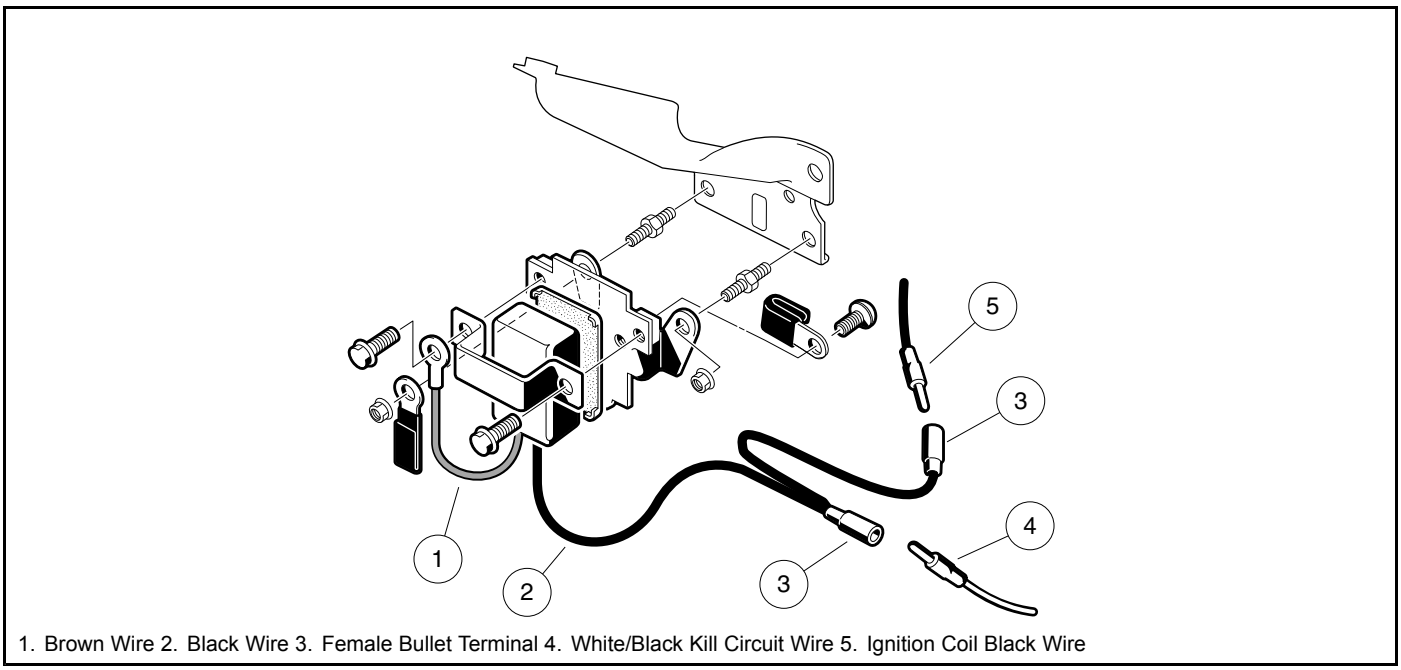

1. Brown Wire 2. Black Wire 3. Female Bullet Terminal 4. White/Black Kill Circuit Wire 5. Ignition Coil Black Wire

466

Figure 12-23 RPM Limiter

TEST PROCEDURE 14 – RPM Limiter

See General Warnings on page 1-1.

1. Disconnect battery and spark plug wire(s). **See Disconnecting the Battery – Gasoline Vehicles on page 1-3.**
2. Disconnect both of the bullet terminals **(Figure 12-23, Page 12-25)**.
3. Using a multimeter set on 200 ohms, place the red (+) probe on the brown ground wire and place the black (–) probe on one of the black wire female bullet connectors. The reading should be no continuity. If the reading is not correct, replace the RPM Limiter.
4. This test will find most bad RPM Limiters. Some of them may bench test okay but fail under a load due to heat while operating. Another method of testing is to replace the RPM Limiter and then run the engine. If the engine runs properly, keep the new RPM Limiter in the circuit.

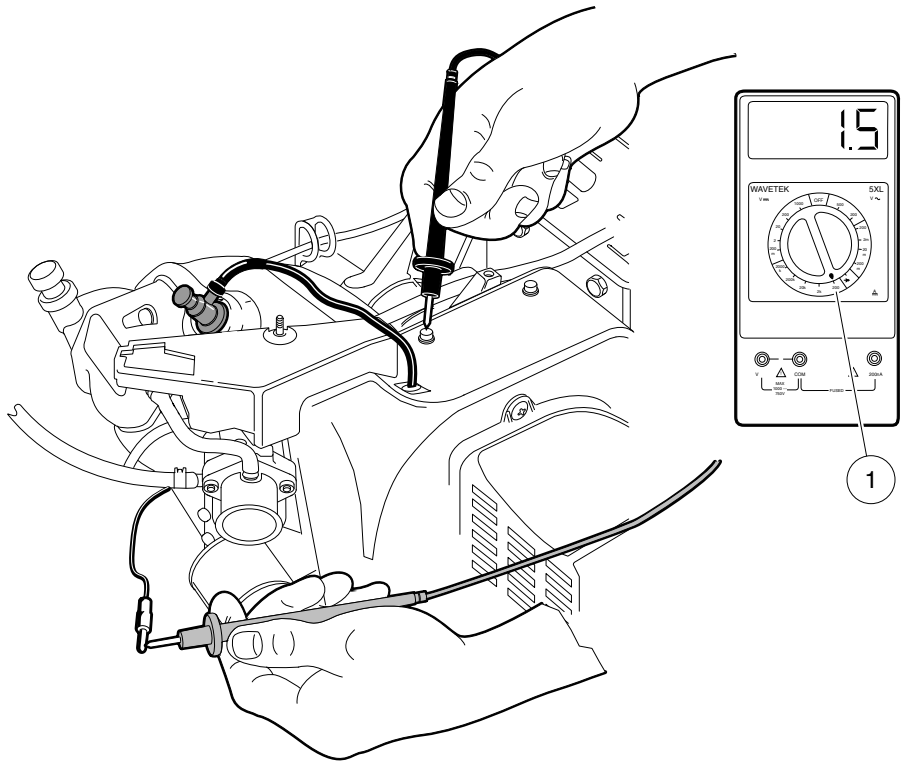

1. 200 Ohm Setting

467

Figure 12-24 Primary Coil Resistance – In Vehicle Test

TEST PROCEDURE 15 – Ignition Coil

See General Warnings on page 1-1.

The following test procedures will properly detect a coil that has failed in most cases; however, in rare cases, some ignition coils can fail to operate at normal (warmer) operating temperatures. If the ignition coil has tested okay in the vehicle and on the bench, but fails to operate reliably, replace the coil with a known good coil and operate the engine for several minutes to ensure that the coil functions at normal operating temperature. If the new coil functions properly, keep the new coil in the circuit.

Ignition Coil – In Vehicle Test

1. Disconnect battery and spark plug wire(s). **See Disconnecting the Battery – Gasoline Vehicles, Section 1, Page 1-3.**
2. Using a multimeter set to 200 ohms, measure the primary coil resistance.
   2.1. Disconnect both of the bullet terminals at the RPM limiter **(Figure 12-23, Page 12-25)**. Place the red (+) probe of the meter on the male bullet terminal of the wire connecting to the ignition coil under the fan housing, and place the black (–) probe on a clean unpainted surface of the engine or frame **(Figure 12-26, Page 12-27)**.
   2.2. If the resistance is not between 0.6 - 1.7 ohms, bench test the ignition coil.

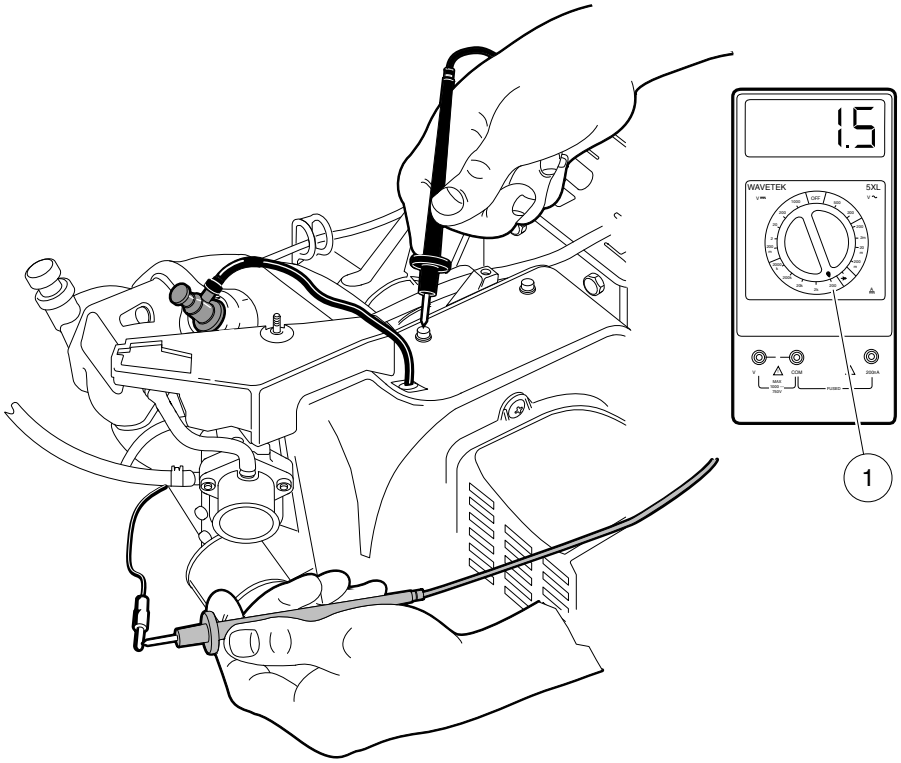

1. 200 Ohm Setting

467

Figure 12-25 Primary Coil Resistance – In Vehicle Test

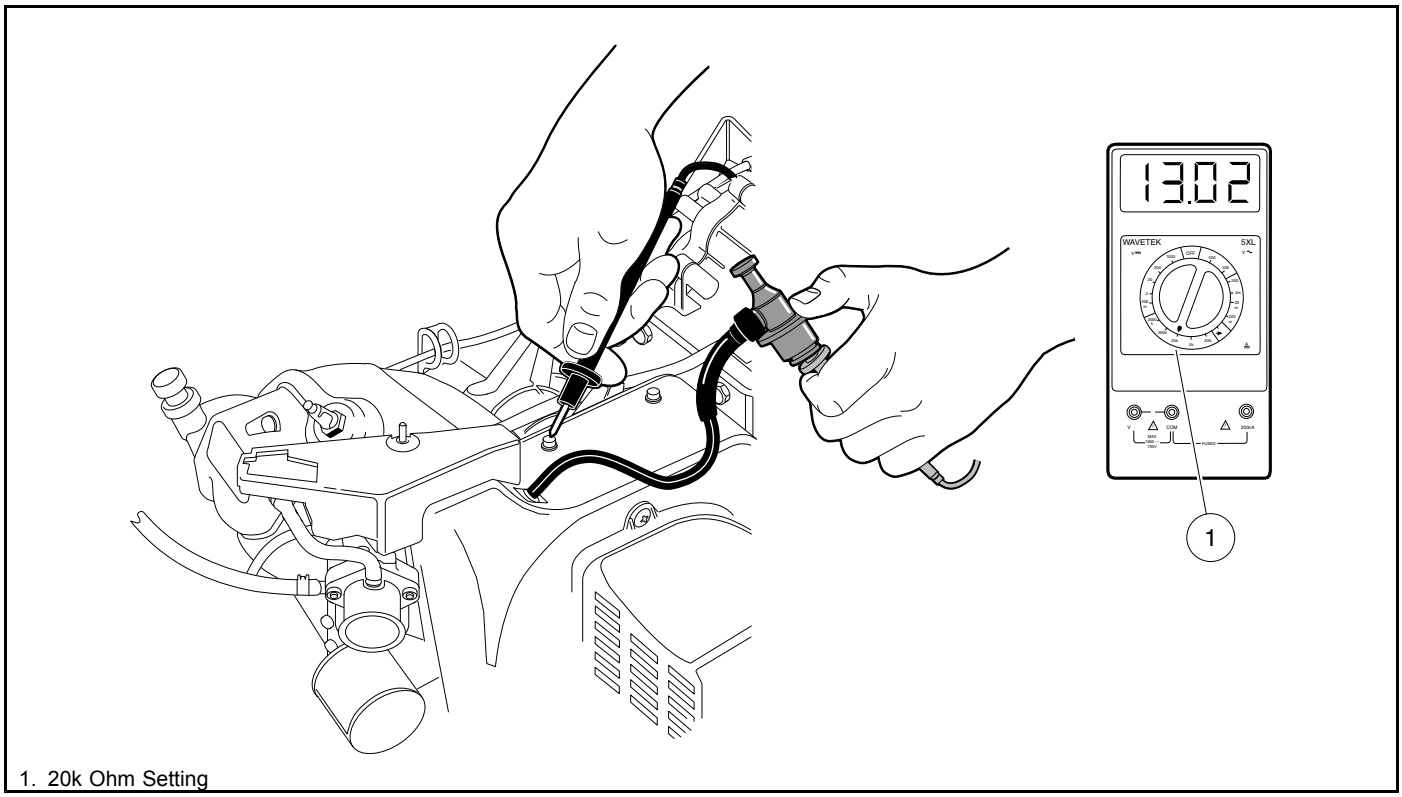

1. 20k Ohm Setting

468

Figure 12-26 Secondary Coil Test – In Vehicle Test

3. Using a multimeter set to 20k ohms, measure the resistance of the secondary coil and spark plug cap together.
   3.1. Place the red (+) probe of the meter into the end of the spark plug cap that normally connects to the spark plug and place the black (–) probe on a clean unpainted surface of the engine or frame **(Figure 12-27, Page 12-28)**.
   3.2. If the resistance is between 12.0k - 14.0k ohms, the secondary coil and spark plug cap are within acceptable limits; proceed to step 6 on page 12-25. If the resistance is not between 12.0k - 14.0k ohms, the spark plug cap and secondary coil must be tested independently from each other.
4. Test the spark plug cap separately from the secondary coil.
   4.1. Remove the rubber gasket (1) on the plug cap (2) by rolling back the gasket onto the spark plug wire (3) **(Figure 12-28, Page 12-29)**.
   4.2. Remove the cap from the wire by turning the cap counterclockwise three or four revolutions while gently pulling it off the wire **(Figure 12-29, Page 12-29)**.

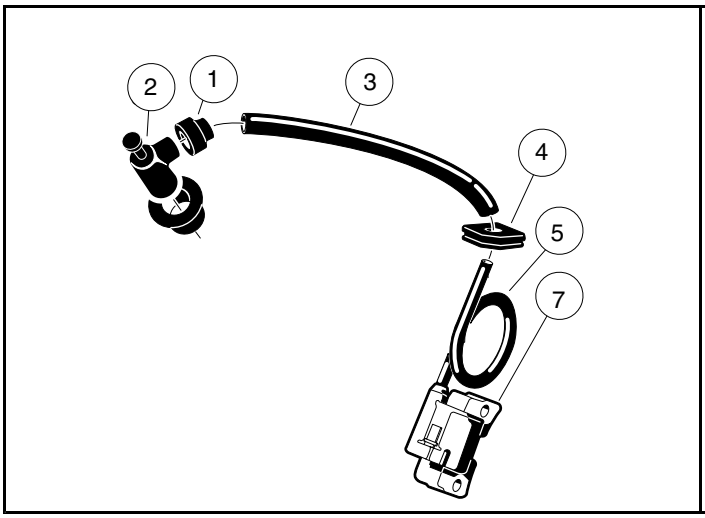

469

Figure 12-27 Ignition Coil and Cap

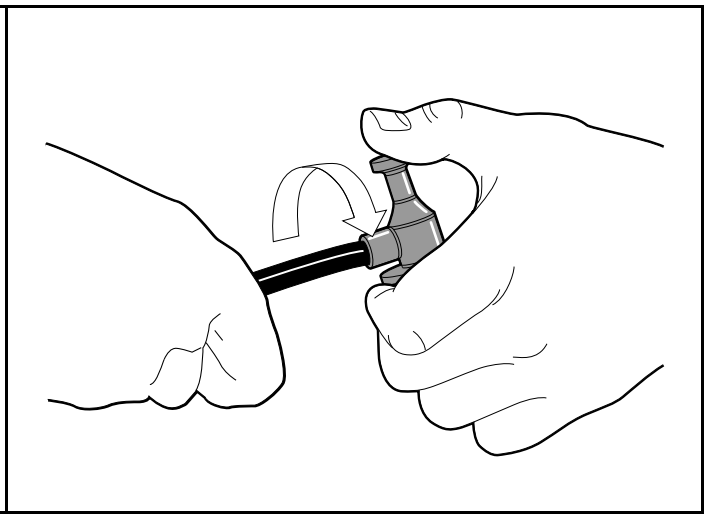

470

Figure 12-28 Spark Plug Cap Removal

4.3. Using a multimeter set to 20k ohms, place the red (+) probe of the multimeter into the end of the spark plug cap that normally connects to the spark plug and place the black (–) probe into the end of the cap with the internal screw **(Figure 12-30, Page 12-29)**. If the resistance is not between 4.5k - 6.0k ohms, the cap has failed and must be replaced. Proceed to the next step with the spark plug cap still removed.

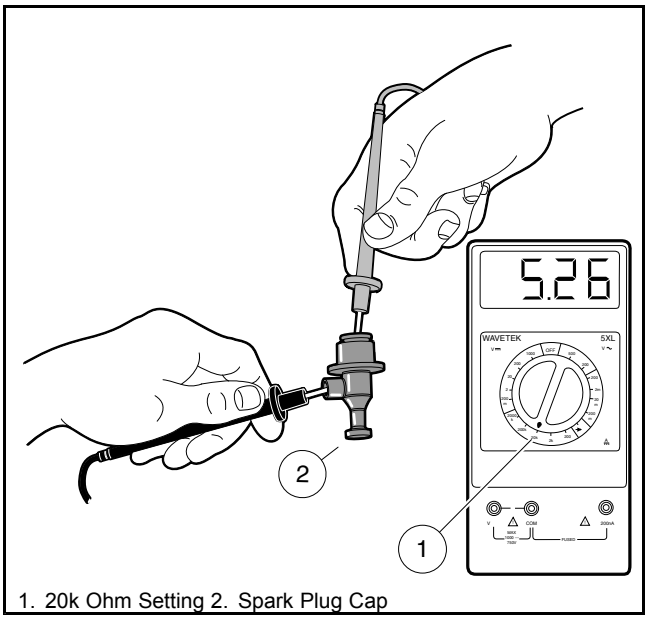

1. 20k Ohm Setting 2. Spark Plug Cap

471

Figure 12-29 Spark Plug Cap Test

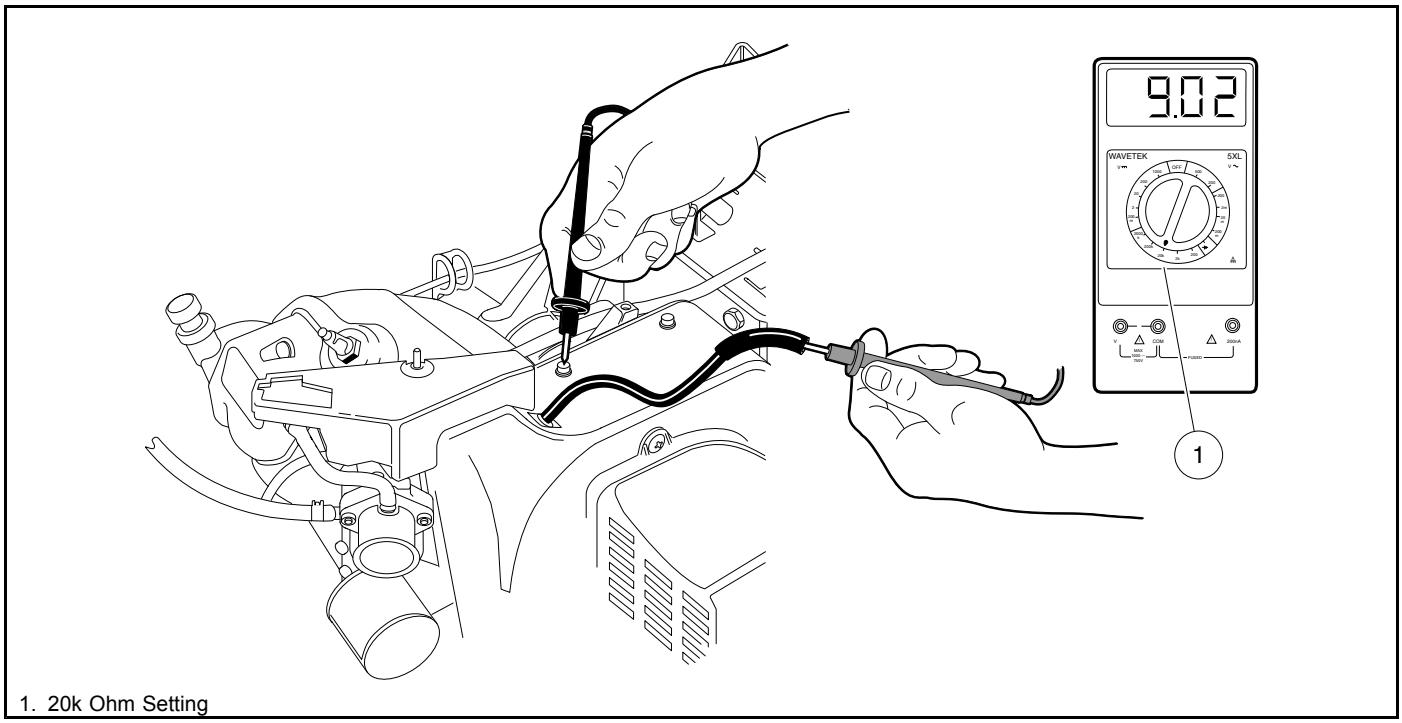

1. 20k Ohm Setting

472

Figure 12-30 Secondary Coil Test Without Cap

5. Test the secondary coil separately from the spark plug cap.
   5.1. Using a multimeter set to 20k ohms, place the red (+) probe of the meter into the end of the spark plug wire and place the black (–) probe on a clean unpainted surface of the engine or frame **(Figure 12-31, Page 12-30)**. If the resistance is between 6.0k - 11.0k ohms, the secondary coil is within acceptable limits. If the resistance is not between 6.0k - 11.0k ohms, bench test the ignition coil.
6. If the preceding tests indicate that the ignition coil resistance readings are within acceptable ranges, but the coil fails to function properly, proceed to the following bench test procedures.

Ignition Coil – Bench Test

1. Remove the coil from the engine. **See Ignition Coil Removal on page 13-37.**
2. Using a multimeter set to 200 ohms, measure the primary coil resistance.
   2.1. Place the black (–) probe of the meter on the terminal on the ignition coil (1), and place the red (+) probe on the core (2) **(Figure 12-32, Page 12-31)**.

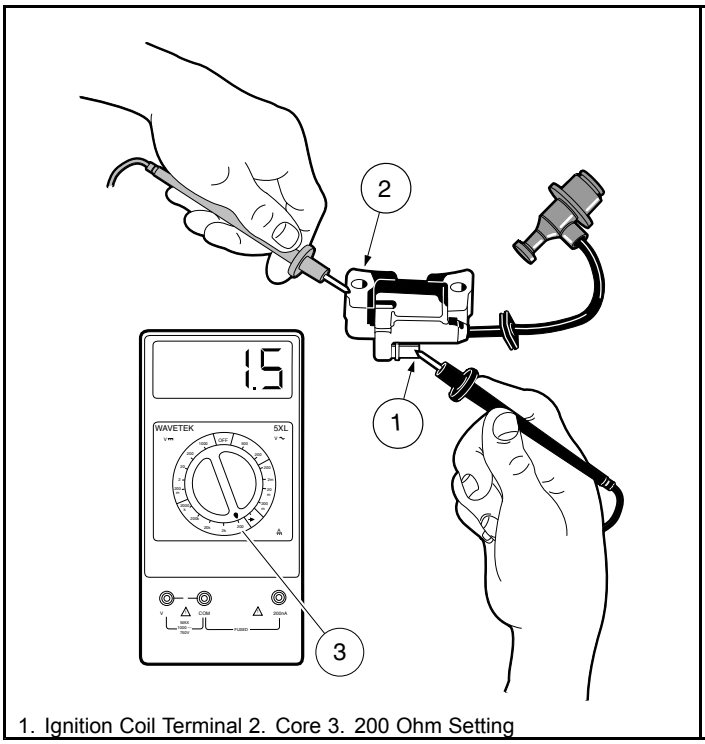

1. Ignition Coil Terminal 2. Core 3. 200 Ohm Setting

473
Figure 12-31 Primary Coil Resistance – Bench Test

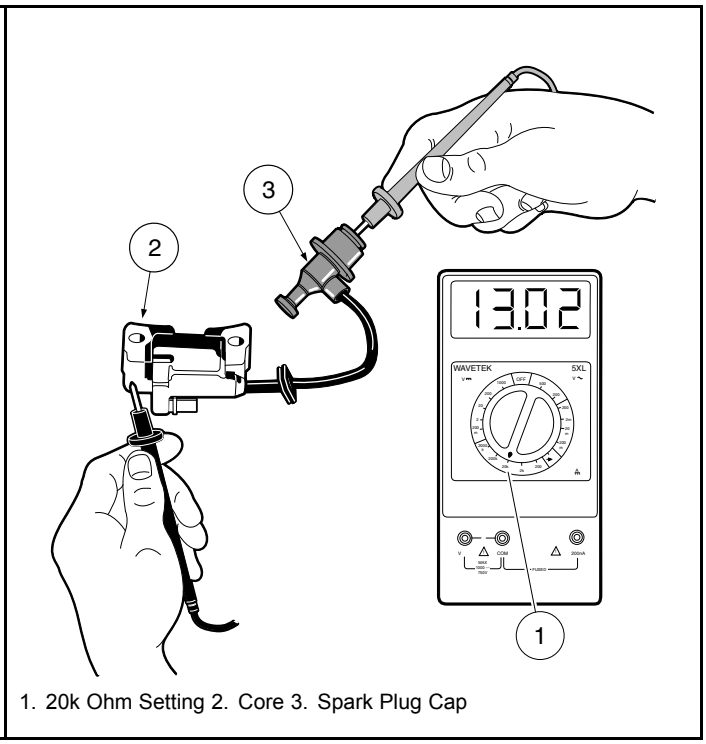

1. 20k Ohm Setting 2. Core 3. Spark Plug Cap

474
Figure 12-32 Secondary Coil and Cap Resistance – Bench Test

2.2. If the resistance is not between 0.6 - 1.7 ohms, replace the ignition coil.

3. Using a multimeter set to 20k ohms, measure the resistance of the secondary coil and spark plug cap together.

3.1. Place the red (+) probe of the meter into the end of the spark plug cap (3) that normally connects to the spark plug and place the black (–) probe on the core (2) **(Figure 12-33, Page 12-31)**.

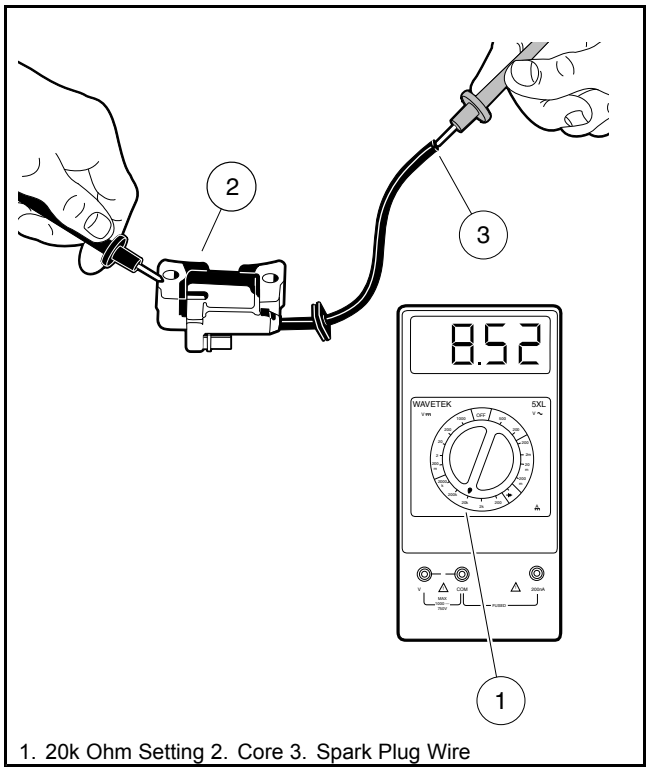

1. 20k Ohm Setting 2. Core 3. Spark Plug Wire

475
Figure 12-33 Secondary Coil Resistance – Bench Test

3.2. If the resistance is between 12.0k - 14.0k ohms, the secondary coil and spark plug cap are within acceptable limits; proceed to step 6 on page 12-26. If the resistance is not between 12.0k - 14.0k ohms, the spark plug cap and secondary coil must be tested independently from each other.

4. If not previously tested, test the spark plug cap separately from the secondary coil.
   4.1. Remove the rubber gasket (1) on the plug cap (2) by rolling back the gasket onto the spark plug wire (3) **(Figure 12-28, Page 12-29)**.
   4.2. Remove the cap from the wire by turning the cap counterclockwise three or four revolutions while gently pulling it off the wire **(Figure 12-29, Page 12-29)**.
   4.3. Using a multimeter set to 20k ohms, place the red (+) probe of the multimeter into the end of the spark plug cap that normally connects to the spark plug and place the black (–) probe into the end of the cap with the internal screw **(Figure 12-30, Page 12-29)**. If the resistance is not between 4.5k - 6.0k ohms, the cap has failed and must be replaced. Proceed to the next step with the spark plug cap still removed.
5. Test the secondary coil separately from the spark plug cap.
   5.1. Using a multimeter set to 20k ohms, place the red (+) probe of the meter into the end of the spark plug wire (3) and place the black (–) probe on the core (2) **(Figure 12-34, Page 12-32)**. If the resistance is between 6.0k - 11.0k ohms, the secondary coil is within acceptable limits. If the resistance is not between 6.0k - 11.0k ohms, the ignition coil has failed and must be replaced.
6. If the preceding tests indicate that the ignition coil resistance readings are within acceptable ranges, but the coil fails to function properly, replace the ignition coil and cap.
7. Connect battery and spark plug wire(s). **See Connecting the Battery – Gasoline Vehicles, Section 1, Page 1-3.**

TEST PROCEDURE 16 – Hour Meter

See General Warnings on page 1-1.

NOTE: *Keep the battery connected while performing this test procedure.*

1. Place the neutral lockout cam in the MAINTENANCE position, put the Forward/Reverse handle in the NEUTRAL position, and chock the wheels.
2. Turn the key switch to ON and record the current hour meter reading.
3. Press and hold the accelerator pedal to run the engine for at least six minutes (the meter records in six-minute increments). **See following DANGER.**

⚠ DANGER

- **Do not operate vehicle in an enclosed area without proper ventilation. The engine produces carbon monoxide, which is an odorless, deadly poison.**

4. If the reading does not change after six minutes, then replace the hour meter.

TEST PROCEDURE 17 – Key Switch (Engine Kill Circuit)

See General Warnings on page 1-1.

1. Disconnect battery and spark plug wire(s). **See Disconnecting the Battery – Gasoline Vehicles on page 1-3.**
2. Remove the instrument panel assembly. **See Key Switch Removal on page 13-26.**
3. Disconnect wires from the (+M) and (–M) terminals of the key switch.
4. Place the red (+) probe on the (+M) terminal and the black (–) probe on the (-M) terminal. With the key switch OFF, the reading should be continuity. With the key switch ON, the reading should be no continuity. If either reading is incorrect, replace the key switch **(Figure 12-34, Page 12-33)**.
5. Connect wires to key switch. Make sure wires are connected correctly and are tight. If they are not, rewire or tighten as necessary.
6. Install instrument panel in reverse order of removal.

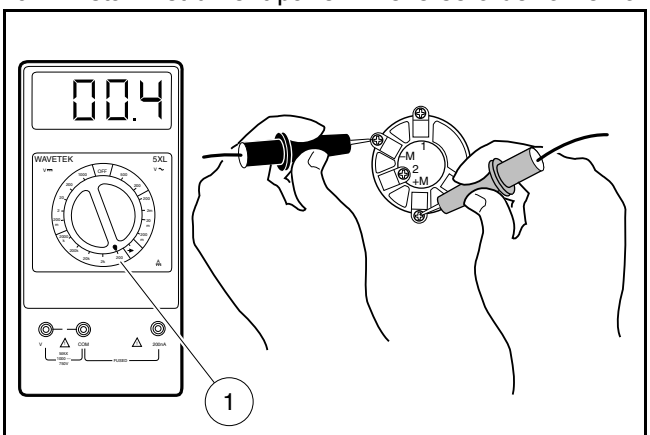

1. 200 Ohm Setting

1337
Figure 12-34 Test Key Switch – Engine Kill Circuit

TEST PROCEDURE 18 – Engine Kill Wire

See General Warnings on page 1-1.

1. Disconnect battery and spark plug wire(s). **See Disconnecting the Battery – Gasoline Vehicles on page 1-3.**
2. Disconnect white/black wire bullet connector located at the engine RPM limiter **(Figure 12-21, Page 12-24)**.
3. Connect red (+) probe of multimeter to the male bullet terminal on the white/black wire and connect the black (–) probe to the vehicle frame.
4. Turn the key switch ON, place the Forward/Reverse handle in FORWARD, and press the accelerator pedal. There should be no continuity. If there is continuity, check for worn insulation on the white/black wire that is allowing the wire to ground to the vehicle frame.

TEST PROCEDURE 19 – Reverse Buzzer Limit Switch

See General Warnings on page 1-1.

NOTE: *Keep the battery connected while performing this test procedure.*

The reverse buzzer limit switch is located on the Forward/Reverse shifter; red/white and orange wires are connected to it.

1. Place the neutral lockout cam in the MAINTENANCE position, put the Forward/Reverse handle in the NEUTRAL position, and chock the wheels.
2. Move the Forward/Reverse handle to REVERSE and listen for an audible click from the limit switch. If there is no click, check the switch for proper alignment and switch arm movement.
3. If the switch is being activated but the buzzer does not function, place the red (+) probe of the multimeter on one terminal and the black (–) probe on the other terminal of the limit switch. Without the lever pressed, the reading should be no continuity. Press the lever and the reading should be continuity. If either reading is incorrect, replace the limit switch. **See Reverse Buzzer Limit Switch Removal on page 13-32.**

TEST PROCEDURE 20 – Reverse Buzzer

See General Warnings on page 1-1.

1. Disconnect battery and spark plug wire(s). **See Disconnecting the Battery – Gasoline Vehicles on page 1-3.**
2. Remove the instrument panel. **See Key Switch Removal on page 13-26.**
3. Check for proper wiring and tight connections. Using a multimeter, individually check for continuity through each wire that connects to the reverse buzzer. **See Wiring Diagrams – Throttle Position Sensor on page 12-6.** If the buzzer will not function when properly wired, replace the buzzer. **See Reverse Warning Buzzer Removal on page 13-31.**

TEST PROCEDURE 21 – Oil Level Sensor

See General Warnings on page 1-1.

NOTE: *Keep the battery connected while performing this test procedure.*

1. Place the neutral lockout cam in the MAINTENANCE position, put the Forward/Reverse handle in the NEUTRAL position, turn the key switch to the OFF position, disconnect the spark plug wire, and chock the wheels.
2. Ensure that the low oil warning light and all connecting wires are functioning correctly. See Test Procedure 22 – Low Oil Warning Light on page 12-35.
3. Drain the engine oil into an approved container and properly dispose of used oil.
4. Turn the key switch ON, closing the circuit. The low oil warning light should illuminate. If the low oil warning light does not illuminate, the oil level sensor needs to be replaced. **See Oil Level Sensor on page 13-40.**
5. Install a new oil filter and fill the engine with new oil before returning the vehicle to service. **See Engine Oil on page 10-4.**

TEST PROCEDURE 22 – Low Oil Warning Light

See General Warnings on page 1-1.

1. Disconnect battery and spark plug wire(s). **See Disconnecting the Battery – Gasoline Vehicles on page 1-3.**
2. Remove the instrument panel assembly. **See Key Switch Removal on page 13-26.**
3. Ensure that the wires are connected correctly and are tight. If they are not, rewire or tighten as necessary **(Figure 12-5, Page 12-10)**.
4. Disconnect the yellow wire (to the oil level sensor) from the terminal on the low oil warning light. Using an alligator clip jumper wire, connect the low oil warning light terminal to the vehicle frame. Connect the red (+) battery cable to the positive (+) battery post, then attach the black (–) cable to the negative (–) battery post.
5. Turn the key switch ON. The low oil warning light should illuminate. If it does not, check continuity between the yellow/white wire connection on the low oil warning light and the blue wire connection at the key switch. If there is no continuity in the wire, correct the problem. Then test the key switch. **See Test Procedure 4 – Key Switch (Starter Circuit) on page 12-16.** If the yellow/white wire and the key switch test okay, then replace the low oil warning light.

TEST PROCEDURE 23 – Neutral Lockout Cam

See General Warnings on page 1-1.

Check to be sure the lobes on the cam are pressing the neutral lockout limit switch lever as the Forward/Reverse handle is being shifted. The limit switch should make an audible click as it is pressed. If it does not, check for wear on the cam lobes. Be sure the cam has snapped fully back into place. If the cam lobes still do not activate the limit switch, replace the cam.

TEST PROCEDURE 24 – Battery Test (Under Load)

See General Warnings on page 1-1.

NOTE: *Keep the battery connected while performing this test procedure.*

1. Place the neutral lockout cam in the MAINTENANCE position, put the Forward/Reverse handle in the NEUTRAL position, and chock the wheels.
2. Set a multimeter to 20 volts DC and place the red (+) probe on the F2 (white wire) terminal on the starter/generator. Place the black (–) probe on the negative (–) battery post.
3. Place battery under load.
   3.1. Turn the key switch to the ON position, leave the Forward/Reverse shifter in the NEUTRAL position and press the accelerator pedal (with the accelerator pedal pressed, the battery is under load).
4. If the voltage reading is over 9.6 volts, with an electrolyte temperature of 70 °F (21 °C), check the starter/generator. **See following NOTE.**

NOTE: *The voltage reading listed is for electrolyte at 70 °F (21 °C). At lower electrolyte temperatures the voltage reading will be lower.*

5. If the reading is below 9.6 volts, with an electrolyte temperature of 70 °F (21 °C), check the battery. **See Test Procedure 1 – Battery on page 12-12.**
6. If the reading is zero, there may be no continuity across the large posts of the solenoid. **See Test Procedure 6 – Solenoid on page 12-18.**
7. If all of the test results are good and the voltage reading is zero, there may be a broken or damaged 6-gauge white wire from the solenoid to the starter/generator. **See Test Procedure 8 – Starter/Generator (Starter Function) on page 12-20.**

TEST PROCEDURE 25 – Fuel Level Sending Unit

See General Warnings on page 1-1.

⚠ WARNING

- **To avoid the possibility of fire or explosion, make sure the fuel tank cap is securely in place while performing this test procedure.**

1. Disconnect battery. **See Disconnecting the Battery – Gasoline Vehicles on page 1-3.**
2. Disconnect the orange wire from the center post of the fuel level sending unit.
3. With a multimeter set to 2 k ohms, place the red (+) probe of the multimeter on the center post of the sending unit. Place the black (–) probe on the ground connection of the sending unit **(Figure 12-35, Page 12-36)**.

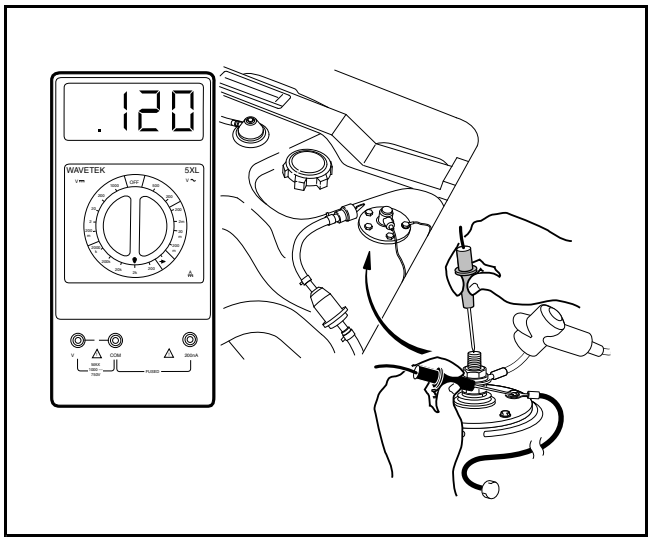

2428

Figure 12-35 Fuel Level Sending Unit Test

4. The following resistance readings (in ohms) should be obtained depending on the position of the float inside the fuel tank. The resistance reading will vary according to the exact position of the float. The chart below may be used as a guideline to determine if the fuel level sending unit is operating correctly. Make sure the float is at the surface of the fuel in the tank.

FLOAT POSITION	RESISTANCE READING	FUEL GAUGE READINGS
Lower position (tank empty)	240 ± 20 ohms	Empty
Center position (tank half full)	120 ± 20 ohms	Half full
Upper position (tank full)	60 ± 20 ohms	Full

5. If the readings are within the specifications listed above, the fuel level sending unit is working properly. If the readings are incorrect, the fuel level sending unit has failed and the fuel tank must be replaced. **See Fuel Tank Removal on page 16-18.**
6. If the readings are correct and the fuel gauge does not function correctly, check the continuity of the orange wire from the fuel level sending unit to the fuel gauge. Leave the battery disconnected while checking continuity. Also check the continuity of the blue wire from the fuel gauge to the key switch, and the black ground wires at the fuel level sending unit and at the fuel gauge. **See Fuel Gauge Removal on page 13-34.**
7. If the readings are correct according to the position of the float, but give an incorrect reading on the fuel gauge, test the fuel gauge. **See Test Procedure 26 – Fuel Gauge on page 12-37.**

TEST PROCEDURE 26 – Fuel Gauge

See General Warnings on page 1-1.

1. Disconnect battery and spark plug wire(s). **See Disconnecting the Battery – Gasoline Vehicles on page 1-3.**
2. Remove the dash assembly to gain access to the back of the fuel gauge. **See Key Switch Removal on page 13-26.**
3. Disconnect the orange wire from the fuel gauge.
4. Set a multimeter to 20 volts DC and place the red (+) probe of the multimeter on the positive (+) post of the battery. Place the black (–) probe on the negative (–) post of the battery. Record the voltage reading.
5. Set a multimeter to 20 volts DC and place the red (+) probe of the multimeter on the (G) terminal of the fuel gauge with the blue wire. Place the black (–) probe on the (S) terminal of the fuel gauge with the black wire **(Figure 12-36, Page 12-37)**.
6. Connect battery and spark plug wire(s). **See Connecting the Battery – Gasoline Vehicles on page 1-3.**
7. Turn the key switch ON. The voltage reading should be the same as the battery voltage reading recorded earlier. If not, check the continuity of the blue and black wires **(Figure 12-36, Page 12-37)**.
8. The orange wire should remain disconnected for this step. With the black probe still on the terminal (S) of the fuel gauge, place the red (+) probe of the multimeter on the (I) terminal of the fuel gauge. The voltage reading should be the same as the full battery voltage reading obtained in step 4. If the reading is incorrect, replace fuel gauge **(Figure 12-37, Page 12-37)**.

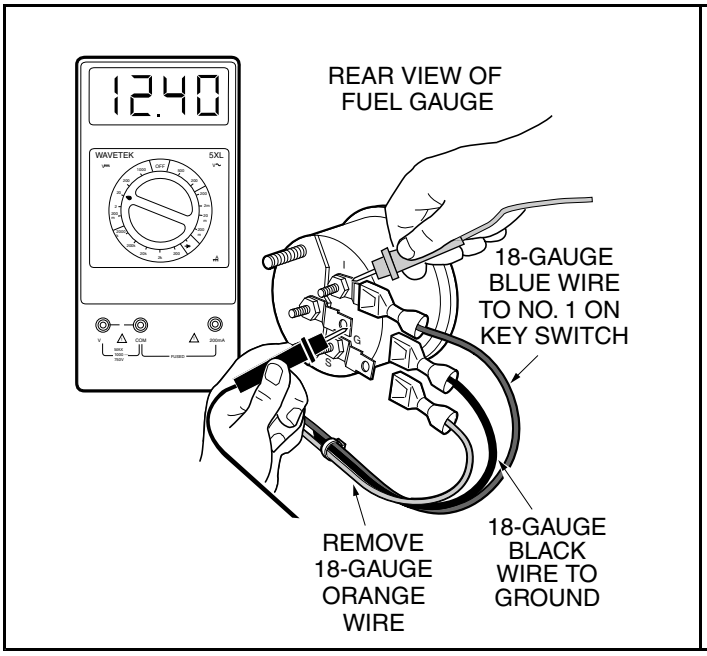

2429

Figure 12-36 Fuel Gauge Test

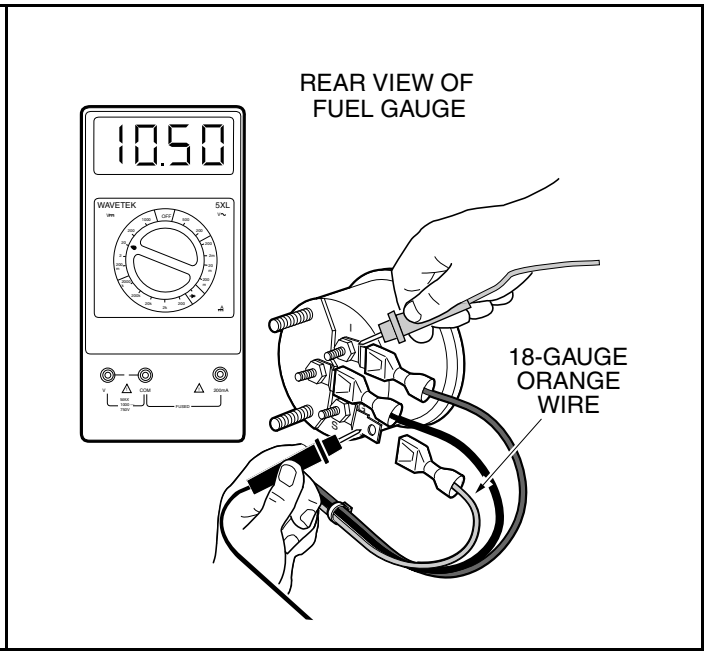

2430

Figure 12-37 Fuel Gauge Voltage Test

⚠ DANGER

- **See General Warnings on page 1-1.**

⚠ WARNING

- **See General Warnings on page 1-1.**

STARTER/GENERATOR (MODEL G425419)

See General Warnings on page 1-1.

TESTING THE STARTER/GENERATOR

See Test Procedure 8 – Starter/Generator (Starter Function) on page 11-20 and Test Procedure 10 – Starter/Generator (Generator Function) on page 11-21.

STARTER/GENERATOR REMOVAL

1. Disconnect battery and spark plug wire(s). **See Disconnecting the Battery – Gasoline Vehicles on page 1-3.**
2. Remove the access panel on the vehicle.

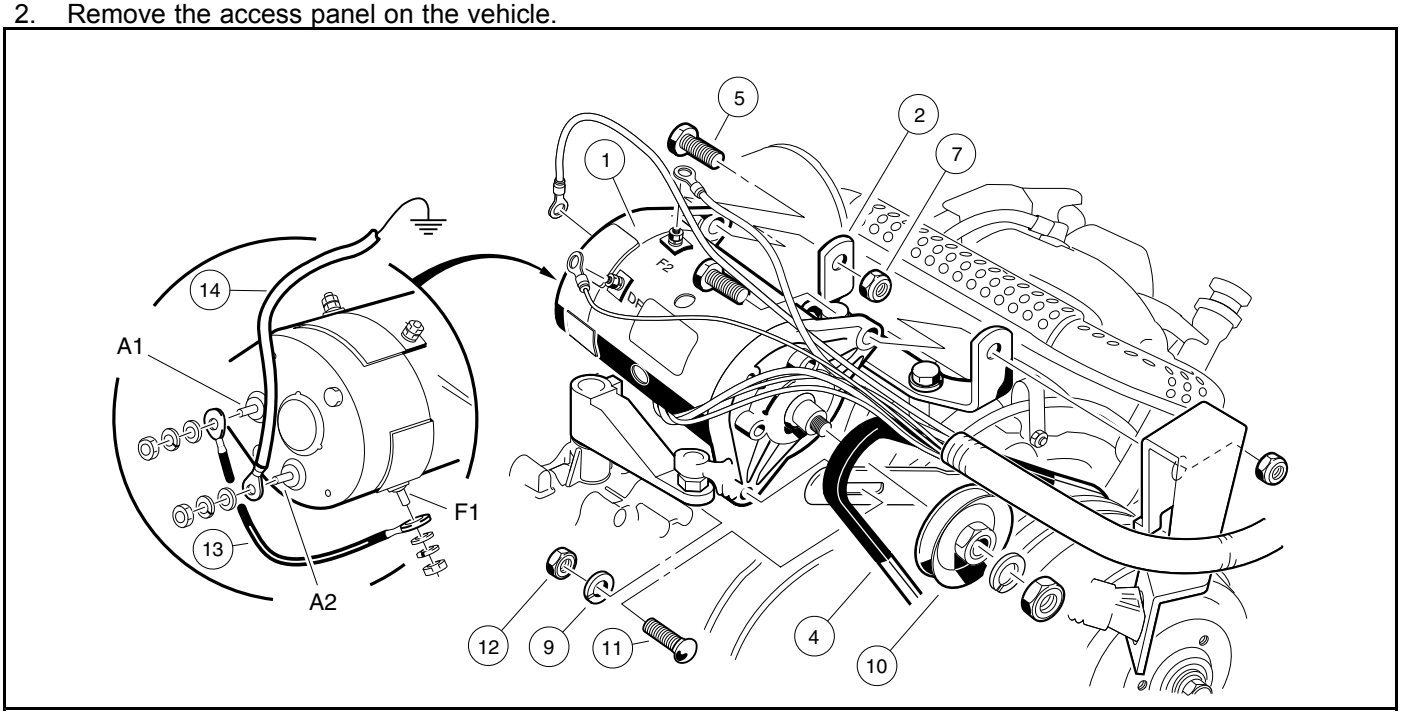

2431

Figure 13-1 Starter/Generator Mounting

3. Mark and disconnect the wires from the starter/generator (1). Loosen the two pivot nuts (7) and bolts (5) **(Figure 13-1, Page 13-1)**.
4. Remove the mounting/adjustment nut (12), washer (9) and bolt (11). Lower the starter/generator and remove the belt (4) from the pulley (10).
5. Support the starter/generator so that when the pivot bolts are removed the starter/generator will not fall to the ground. Remove the two pivot nuts (7) and bolts (5) from the mounting bracket.
6. Remove the starter/generator.

DISASSEMBLY OF THE STARTER/GENERATOR TO SERVICE THE BRUSHES

1. Remove the two bolts (20) and pull commutator end cover (23) free of starter/generator housing (24) **(Figure 13-2, Page 13-2)**. **See following NOTE.**

NOTE: *If the brushes are not removed, contact between the brushes and commutator as the commutator end cover is being removed or installed could damage the brushes. Lift the brush springs out of the notches in the brushes and pull the brushes back from the center of the commutator end cover. The springs will rest on the sides of the brushes and help prevent them from sliding towards the center of the cover* ***(Figure 13-6, Page 13-4)****.*

2. Remove brush covers (29 and 30), screws (25) and lock washers (26), brush springs (28), and brushes (27) **(Figure 13-3, Page 13-2)**. **See following NOTE.**

NOTE: *To clean and inspect the armature/commutator and the bearings.* ***See Disassembly of the Starter/Generator to Service the Armature/Commutator on page 13-4.***

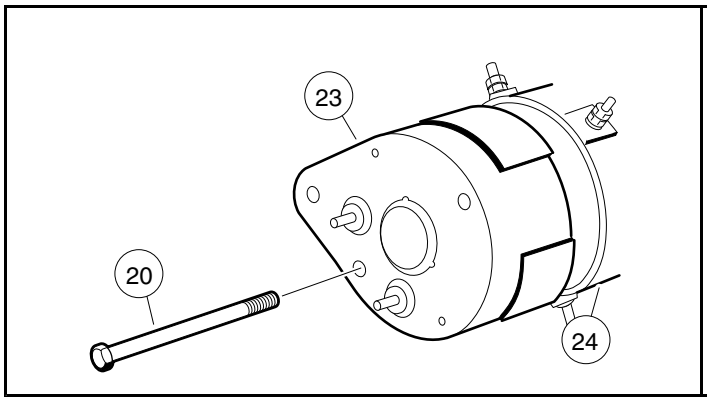

487

Figure 13-2 Commutator End Cover

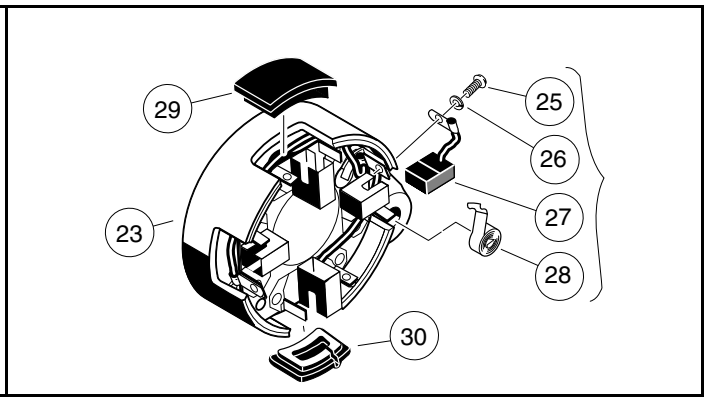

488

Figure 13-3 Brush Covers and Brushes

BRUSH INSPECTION AND REPLACEMENT

1. Visually inspect brushes. Replace brushes that are cracked or severely chipped.
2. Check the wear line on the side of the brush. If the end of the brush is within 1/16 inch (1.6 mm) of the wear line, replace all four brushes **(Figure 13-4, Page 13-3)**.

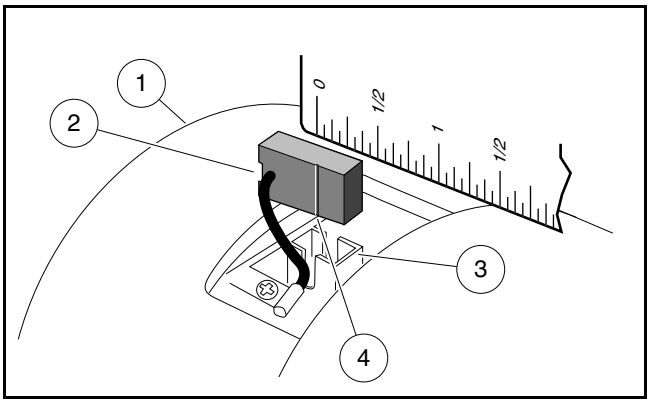

489

Figure 13-4 Inspect Brushes

BRUSH SPRING INSPECTION AND REPLACEMENT

1. Visually inspect springs. Replace all four springs if any spring is discolored from heat (straw or bluish in color).
2. Install the four brushes (27) into their holders and insert the four brush springs (28) **(Figure 13-3, Page 13-2)**. Using a spring scale, test brush spring tension. If any spring has a tension less than 24 ounces (6.67 N), replace all four springs **(Figure 13-5, Page 13-3)**. **See following CAUTION.**

CAUTION

- **When checking brush spring tension, do not push springs beyond the point they would normally be if there were new brushes installed. Exerting excessive force or pushing brush springs beyond their normal maximum extension point will damage springs.**

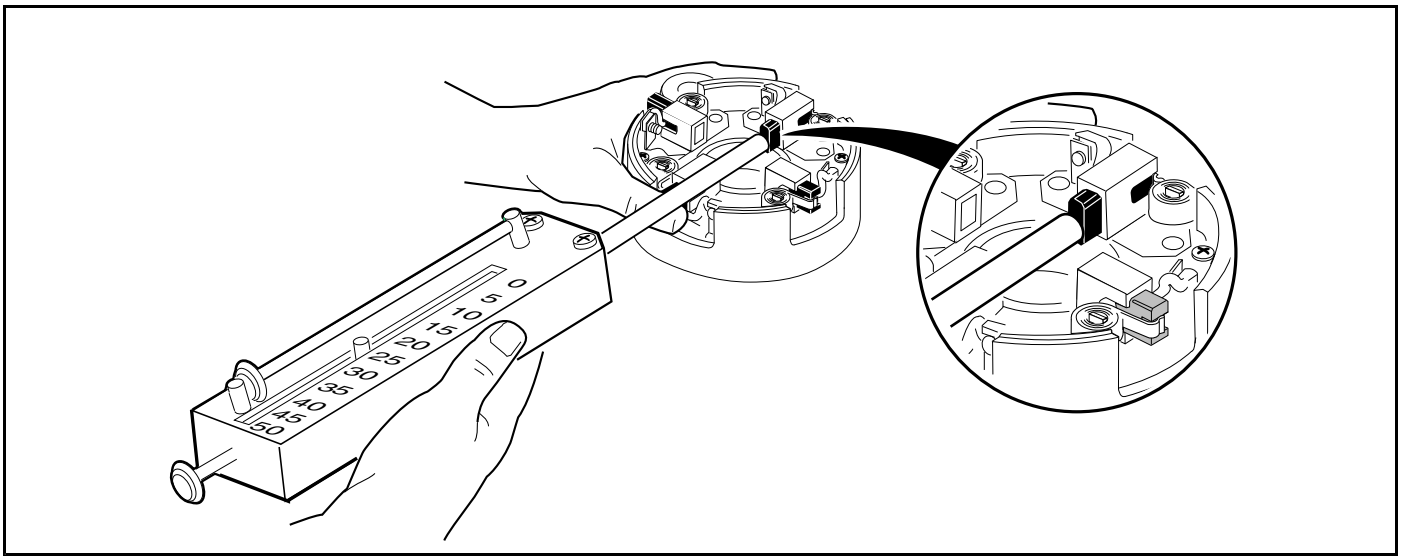

490

Figure 13-5 Brush Spring Tension Test

STARTER/GENERATOR ASSEMBLY

1. Connect the brush wires to the holders using four lock washers (26) and four screws (25), making sure the crossover leads are connected also. Tighten the screws to 31 in-lb (3.5 N·m) **(Figure 13-3, Page 13-2)**.
2. To prevent contact between the brushes and commutator as the commutator is installed, and possible damage to the brushes, lift the brush springs out of the notches in the brushes and pull the brushes back from the center of the commutator end cover. The springs will rest on the sides of the brushes and help prevent them from sliding towards the center of the cover **(Figure 13-6, Page 13-4)**.
3. Install the commutator end cover (23) onto the armature shaft. Align the locating pin with the pin hole in the cover. Install two M6 x 180 mm bolts (20) and tighten to 100 in-lb (11.3 N·m) **(Figure 13-2, Page 13-2)**.
4. Push the brushes down into the holders. Position springs into the notches in the brushes. Install the brush cover (30) that has the drain hole in it next to the A2 terminal. Install the remaining three brush covers (29) in the openings in the commutator end cover (23) **(Figure 13-3, Page 13-2)**.

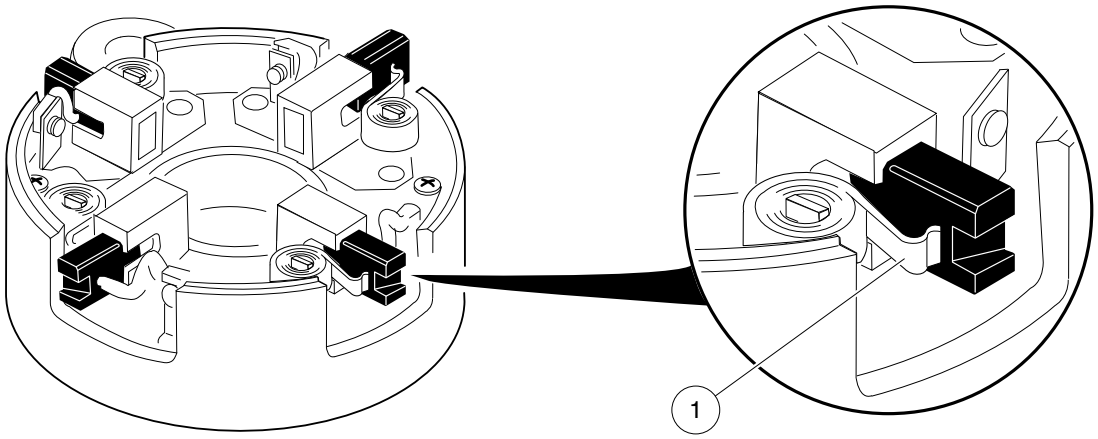

1. Brush held by spring.

491

Figure 13-6 Pull Brushes Away from Center of the Commutator End Cover

DISASSEMBLY OF THE STARTER/GENERATOR TO SERVICE THE ARMATURE/COMMUTATOR

1. If the brushes are not removed, contact between the brushes and commutator as the commutator end cover is being removed or installed could damage the brushes.
   1.1. Lift the brush springs out of the notches in the brushes and pull the brushes back from the center of the commutator end cover. The springs will rest on the sides of the brushes and help prevent them from sliding towards the center of the cover **(Figure 13-6, Page 13-4)**.
2. Remove the two bolts (20), and pull commutator end cover (23) free of the starter/generator housing (24) **(Figure 13-2, Page 13-2)**.
3. To separate armature (33) from output end cover (36), remove nut (41), lock washer (40), pulley (39), shaft key (34), spacer (37), and bearing retainer screws (43) **(Figure 13-7, Page 13-5)**.

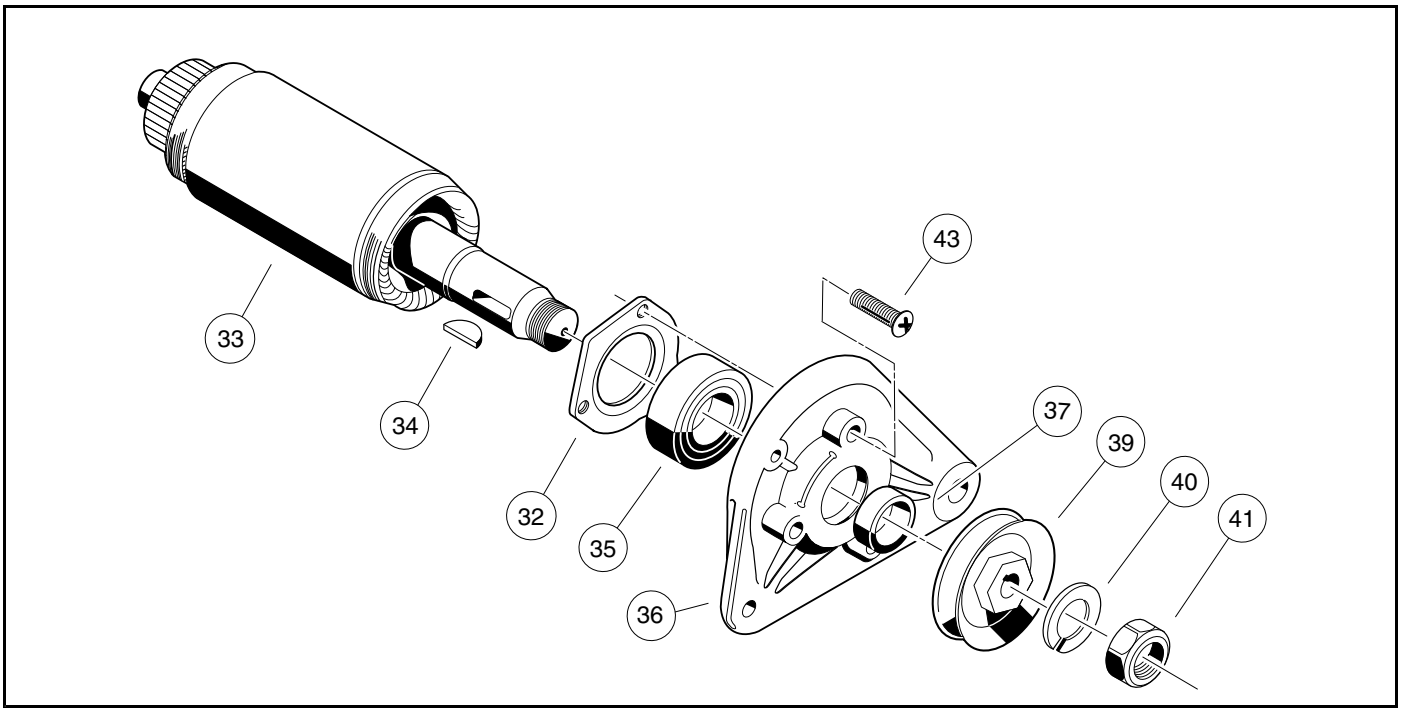

492

Figure 13-7 Armature and Output End Cover Assembly

BEARING CLEANING AND INSPECTION

1. Using a clean cloth, wipe the carbon dust from the two bearings. Inspect bearings by spinning them by hand and checking for both axial (A) and radial (B) play **(Figure 13-8, Page 13-5)**.
2. Replace the bearing if it is noisy, does not spin smoothly, or has excessive play. Check the bearings and replace if rusted, worn, cracked, or if there is an abnormal color change in the metal of the bearing. Bearings should be replaced if there is extensive wear or pitting on the balls or on the rolling surfaces. Do not remove the bearings unless they are to be replaced.

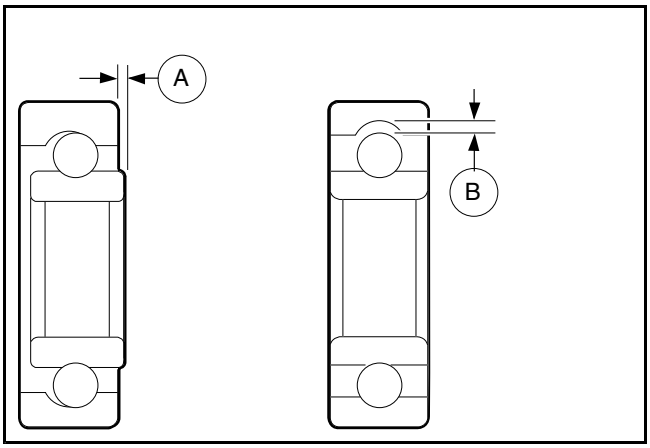

493

Figure 13-8 Bearing Play Inspection

BEARING REMOVAL

1. Place the wedge attachment tool (P/N 1012812) between the bearing and the armature. Make sure the wedge attachment tool is supporting the inner race of the bearing. If a press is not available, secure a bearing puller (P/N 1012811) to the wedge attachment tool and pull the bearing off of the end of the armature shaft. Support the armature so that it will not drop when the bearing is removed **(Figure 13-9, Page 13-6)**.
2. Discard the bearings.
3. Slide the bearing retainer (32) off of the output end of the shaft **(Figure 13-7, Page 13-5)**.

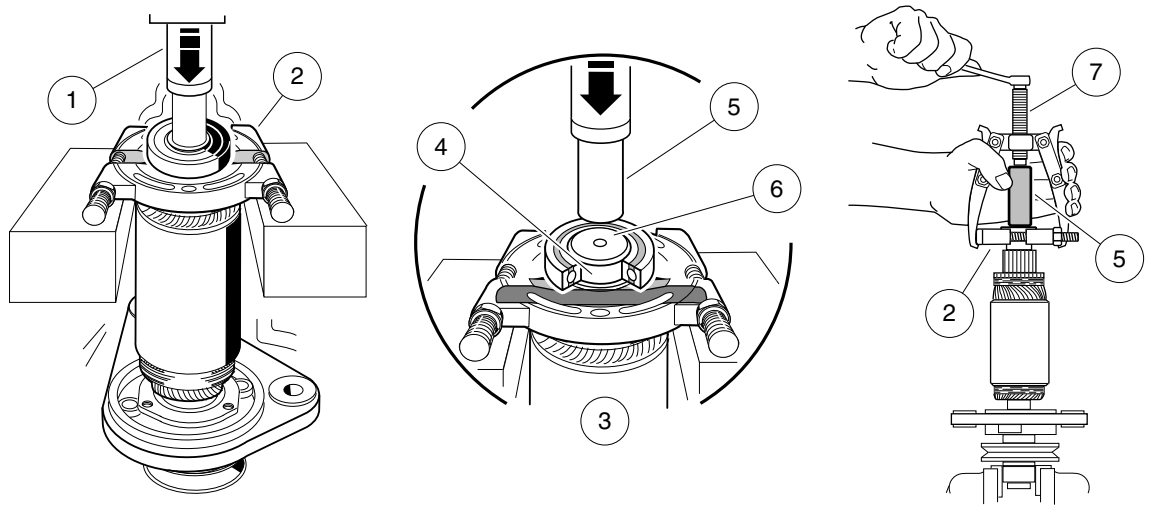

1. Press Ram 2. Wedge Attachment Tool 3. Bearing sectioned for clarity 4. Support inner race of bearing 5. Use a 1/2 inch socket or pipe 6. Press against armature shaft 7. Use bearing puller if a press is not available

494

Figure 13-9 Bearing Removal

FIELD COIL REMOVAL

Remove the retaining nut from each field coil terminal and slide the insulator out of the slots in the housing. Remove the four pole piece screws from the housing. Remove the four pole pieces from inside the housing. Remove the field coils from the inside of the housing **(Figure 13-10, Page 13-7)**. **See following NOTE.**

NOTE: *Do not remove the insulators or the field coils unless an electrical test indicates that it is necessary* ***(Figure 13-10, Page 13-7). See Test Procedure 8 – Starter/Generator (Starter Function) on page 12-20.***

VISUAL INSPECTION OF ARMATURE

Obvious defects can be seen by examining the armature. If an armature has frayed or charred insulation, broken wires or thrown solder, it is obvious without testing that it should be replaced. Faults seen during the visual inspection can aid in diagnosing the original cause of the failure. Items to look for are listed below.

- Burned, charred, or cracked insulation
- Improperly cured varnish
- Thrown solder
- Flared armature windings
- Worn, burned, or glazed commutator
- Loose or raised commutator bars
- Bruised or damaged armature core laminations
- Worn armature bearing or shaft
- Dirty or oily commutator

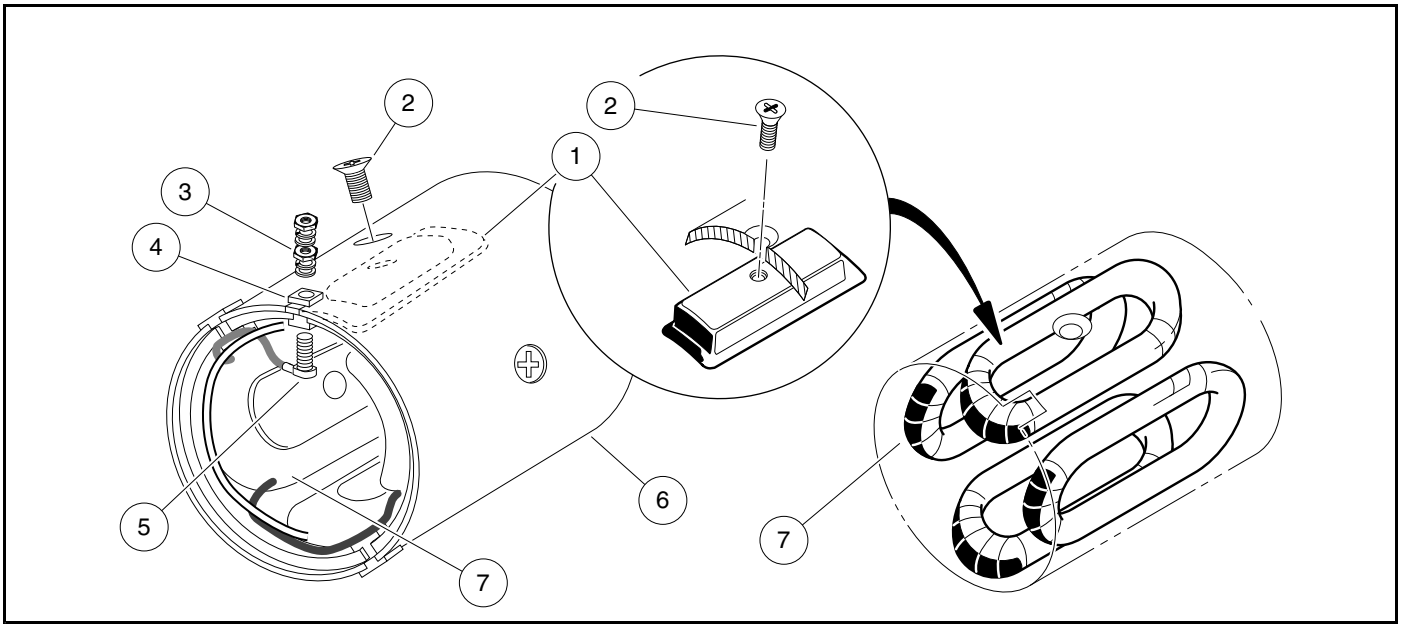

495

Figure 13-10 Field Coil Assembly

COMMUTATOR CLEANING AND INSPECTION

1. Clean the carbon dust, dirt and oil from the commutator. Visually inspect the commutator for worn, burned or glazed areas. Check for loose or raised commutator bars. Slight roughness of the commutator can be polished away with 400 grit (or finer) sandpaper. **See following CAUTION.**

CAUTION

- **Do not use emery cloth on the commutator. Particles of emery are conductive and may short-circuit the commutator bars. Do not use oil or lubricants on the commutator or brushes.**

2. Using a micrometer, measure the outside diameter at two points along the commutator. If the commutator outside diameter is less than 1.535 inches (39 mm), replace the armature and bearings **(Figure 13-11, Page 13-8)**.

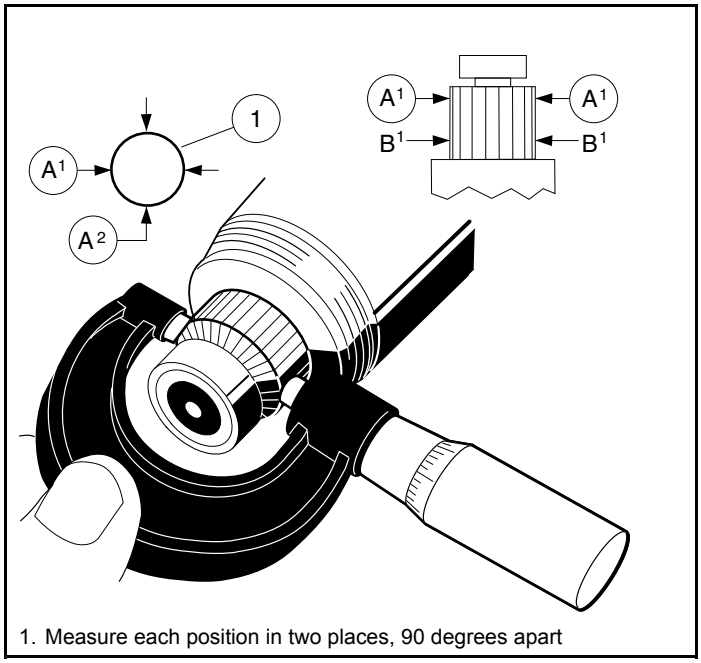

1. Measure each position in two places, 90 degrees apart

496

Figure 13-11 Inspect Commutator

ARMATURE GROUND TEST

CAUTION

- **Do not submerge armature in solvent.**

NOTE: *Before testing, wipe the armature with a clean cloth and remove carbon dust and metal particles from between commutator bars.*

Using a multimeter set on 200 ohms, place the positive (+) probe on the commutator bars and the negative (–) probe on the armature core. The reading should be no continuity. If the reading is incorrect, replace the armature and the two bearings **(Figure 13-12, Page 13-9)**.

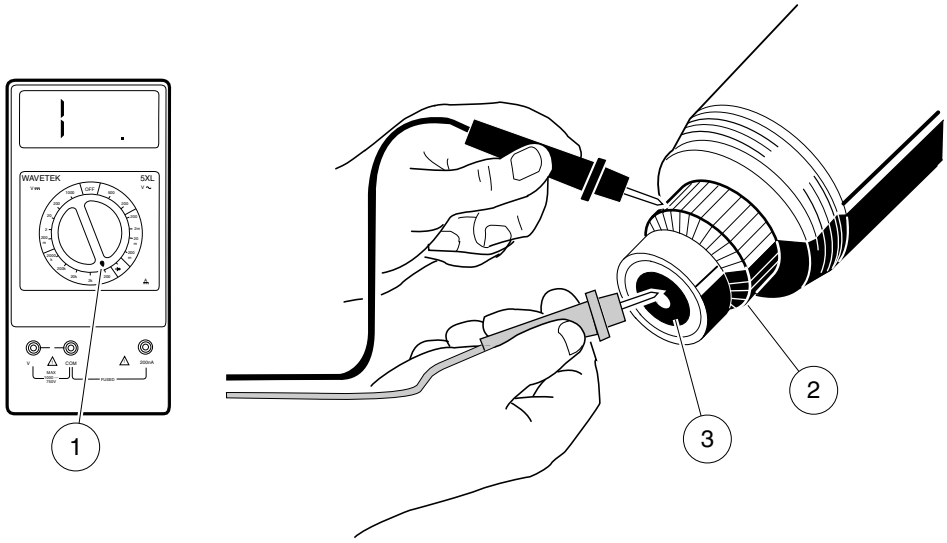

1. 200 Ohms Setting 2. Commutator 3. Armature Shaft

497

Figure 13-12 Armature Ground Test

VISUAL INSPECTION OF FIELD COILS

If the insulation on the field coils appears blackened or charred, the serviceability of the coils is questionable. Burned or scorched coil insulation indicates the starter/generator has overheated due to overloads or grounded or shorted coil windings. Be sure the insulators are tight in the housing.

STARTER/GENERATOR REWORK

Any rework must be performed by a qualified technician. Starter/generator service specifications are listed in the following table.

ITEM	SERVICE LIMIT
Commutator diameter (minimum)	1.535 in. (39 mm)
Concentric with armature shaft within	0.002 in. (0.051 mm)
Limit depth of cut when machining commutator	0.007 in. (0.2 mm)
If undercut of segment insulator is less than 0.016 inch (0.406 mm), then it should be undercut to:	0.031 in. (0.8 mm)
Dielectric strength	500 VAC for one minute
Armature insulation resistance	0.2M ohms at 500 VDC
Starter field coil resistance	0.006-0.01 ohms
Generator field coil resistance	4.5-5.5 ohms

STARTER/GENERATOR ASSEMBLY

1. Place the field coil into the housing. The two insulators that look alike fit into the slots next to the F1 and F2 markings on the outside of the housing. The insulator that looks different slides into the slot next to the DF marking.
2. After the insulators are seated in the slots, install the threaded terminals through the wire connectors and then through the insulators. Install a flat washer, lock washer and nut onto each threaded terminal on the outside of the housing. Tighten nuts to 47.5 in-lb (5.4 N·m) **(Figure 13-10, Page 13-7)**.

CAUTION

- **Route the field terminal wires so that they will not contact the armature.**

3. Install the four pole pieces into the housing. Use the four screws to secure pole pieces to the inside of the housing to retain the field wires. Tighten screws to 9 ft-lb (12.2 N·m) **(Figure 13-10, Page 13-7)**.
4. Slide the bearing retainer onto the output end of the armature shaft (33) so that it will hold the outside of the bearing (35) only.
5. Press a new ball bearing (35) onto the output end of the armature **(Figure 13-7, Page 13-5)**. Press a new ball bearing onto the commutator end of the armature shaft. **See following CAUTION.**

CAUTION

- **To prevent damage to the retainer, use care while pressing new bearing onto the output end of the shaft.**
- **Press against the inner race of the new bearing until it is fully seated.**

6. Install the output end cover (36) onto the armature. Secure the bearing retainer (32) to the cover and tighten the screws (43) to 39 in-lb (4.4 N·m) **(Figure 13-7, Page 13-5)**.
7. Slide the housing with field coils over the armature. Use the locating pin to align housing to the cover.

NOTE: *The terminal insulators should be on the commutator end of the housing.*

8. To prevent contact between the brushes and commutator as the commutator cover is installed, and possible damage to the brushes, lift the brush springs out of the notches in the brushes and pull the brushes back from the center of the commutator end cover. The springs will rest on the sides of the brushes and help prevent them from sliding towards the center of the cover **(Figure 13-6, Page 13-4)**.
9. Install the commutator end cover (23) onto the armature shaft. Align the locating pin with the pin hole in the cover. Install the two M6 x 180 mm bolts (20), and tighten to 100 in-lb (11.3 N·m) **(Figure 13-2, Page 13-2)**.
10. Push the brushes down into the holders. Place springs into the notches in the brushes. Install the brush cover (30) that has the drain hole in it next to the A2 terminal. Install the remaining three brush covers (29) in the openings in the commutator end cover (23) **(Figure 13-3, Page 13-2)**.
11. Slide the spacer (37) onto the end of the shaft. Insert the shaft key (34) into the shaft. Install the belt pulley (39) onto the shaft, and install the lock washer (40) and M14 nut (41). Tighten the nut to 28 ft-lb (38.0 N·m) **(Figure 13-7, Page 13-5)**.

STARTER/GENERATOR INSTALLATION

1. Install the green wire from the F1 terminal to the A1 terminal on the starter/generator **(Figure 13-1, Page 13-1)**. Install a flat washer, lock washer, and nut onto each terminal and tighten to 48 in-lb (5.4 N·m).
2. Install two 3/8-inch hex-head pivot bolts (5) into the mounting bracket with the heads of the bolts facing toward the driver-side of the vehicle. Position the starter/generator in the mounting bracket so that the bolts will go through the starter/generator before going through the bracket. Install a lock nut (7) onto each bolt. Tighten to finger tight **(Figure 13-13, Page 13-11)**.
3. Install the adjustment bolt (11) through the adjusting bracket (4) and then through the starter/generator. Install a lock washer (9) and 5/16-inch nut (12) onto the end of the adjustment bolt (11). Tighten to finger tight **(Figure 13-13, Page 13-11)**.
4. Install the belt (3), then tighten the mounting bolts. **See Belt Tension Adjustment on page 13-11.**
5. Connect the yellow wire from main harness to the DF terminal on the starter/generator. Install a flat washer, lock washer, and nut onto the terminal. Tighten the nut to 31 in-lb (3.5 N·m).
6. Install the white wire from the solenoid to the F2 terminal on the starter/generator. Install the 10-gauge black wire from the main harness to the A2 terminal on the starter/generator. Install a flat washer, lock washer and nut onto each terminal, and tighten the nut to 48 in-lb (5.4 N·m).
7. Adjust belt tension. **See Belt Tension Adjustment on page 13-11.**

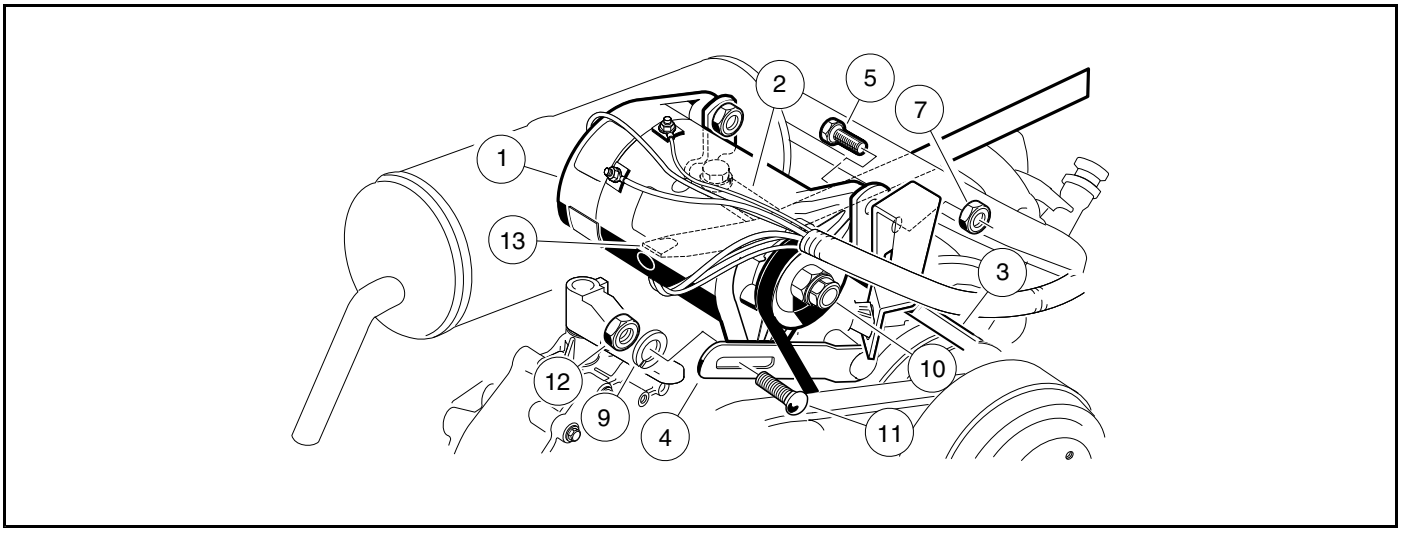

1390

Figure 13-13 Starter/Generator Installation

BELT TENSION ADJUSTMENT

Belt tension should be checked periodically. If the belt slips when starter/generator motor operates, adjust belt to correct tension.

1. If not already disconnected, disconnect battery and spark plug wire(s). **See Disconnecting the Battery – Gasoline Vehicles on page 1-3.**
2. Remove the access panel on the vehicle.
3. Make sure the two pivot bolts (5) on the mounting bracket are finger tight. The carriage bolt (11) and hex nut (12) are to be finger tight also **(Figure 13-13, Page 13-11)**.
4. Push the starter/generator down so it is at the lowest point of its adjustment travel. With the starter/generator belt in place around the drive clutch pulley, install the starter/generator belt (3) around the pulley (10) on the end of the starter/generator.
5. Position a pry bar (13) between the top of the starter/generator mounting bracket (2) and the underside of the starter/generator by passing the pry bar under the exhaust header. **See following NOTE.**

NOTE: *As an alternative to using a pry bar, a belt tensioning tool is available from Club Car (P/N 102570401).*

6. While holding the pry bar, measure the belt tension using a Krikit® gauge (1) (available at NAPA® Auto Parts stores), or equivalent. Proper tension for a new starter/generator belt should be 120 lb (534 N) or 70 lb (311 N) for an existing belt **(Figure 13-14, Page 13-12)**.
7. While maintaining the tension, tighten the adjustment nut (12) to 144 in-lb (16.3 N·m). Tighten the two pivot bolts (5) and hex nuts (7) to 23 ft-lb (31.2 N·m) **(Figure 13-13, Page 13-11)**. **See following CAUTION.**

⚠ CAUTION

- **Remove pry bar before starting engine.**

8. Connect battery and spark plug wire(s). **See Connecting the Battery – Gasoline Vehicles on page 1-3.**

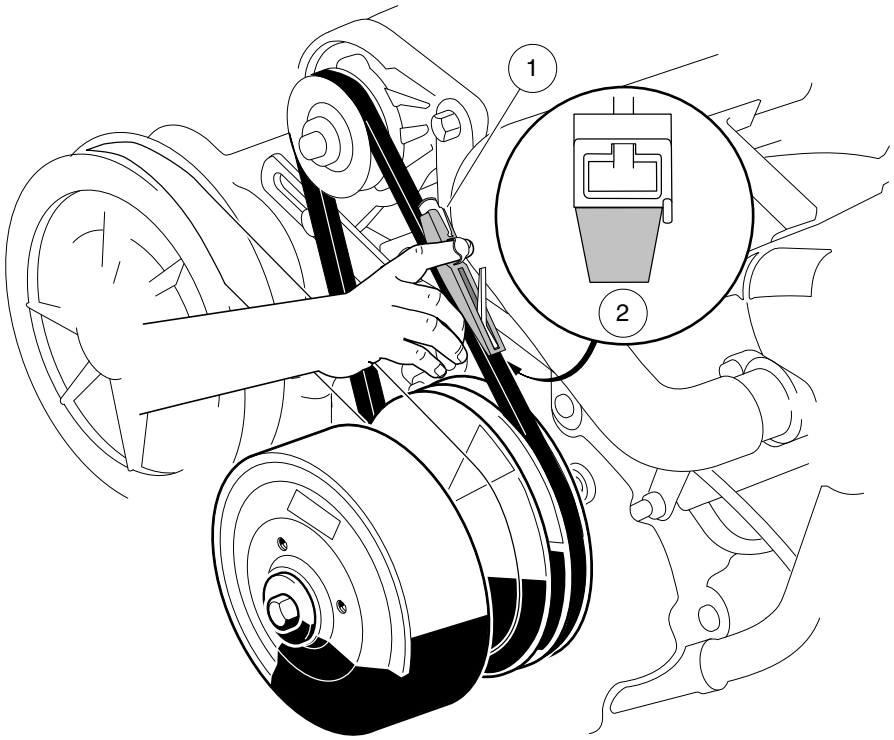

1. Belt Tension Gauge 2. End View

499

Figure 13-14 Belt Tension Gauge

STARTER/GENERATOR (MODEL 114-01-4005B)

See General Warnings on page 1-1.

TESTING THE STARTER/GENERATOR

See Test Procedure 8 – Starter/Generator (Starter Function) on page 12-20 and Test Procedure 10 – Starter/Generator (Generator Function) on page 12-21.

STARTER/GENERATOR REMOVAL

1. Disconnect battery and spark plug wire(s). **See Disconnecting the Battery – Gasoline Vehicles on page 1-3.**
2. Remove the access panel on the vehicle.
3. Mark and disconnect the wires from the starter/generator (1). Loosen the two pivot nuts (7) and bolts (5) **(Figure 13-15, Page 13-13)**.

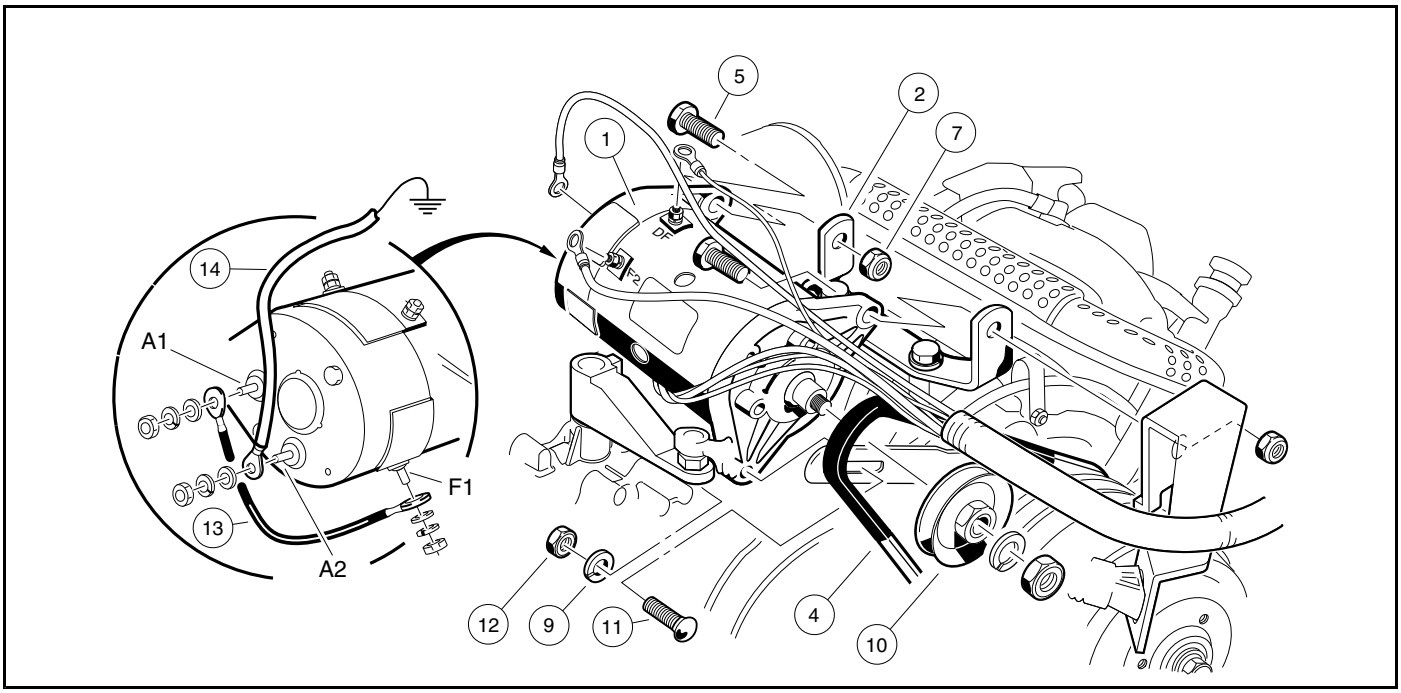

1389

Figure 13-15 Starter/Generator Removal

4. Remove the mounting/adjustment nut (12), washer (9) and bolt (11). Lower the starter/generator and remove the belt (4) from the pulley (10).
5. Support the starter/generator so that when the pivot bolts are removed the starter/generator will not fall to the ground. Remove the two pivot nuts (7) and bolts (5) from the mounting bracket.
6. Remove the starter/generator.

DISASSEMBLY OF THE STARTER/GENERATOR TO SERVICE THE BRUSHES

1. Remove brush covers (29 and 30). **(Figure 13-17, Page 13-14)**. Pull back each brush spring and pull the brushes back from the center of the commutator end cover. The springs will rest on the sides of the brushes and help prevent them from sliding towards the center of the cover. **(Figure 13-20, Page 13-16)**. **See following NOTE.**

NOTE: *If the brushes are not removed, contact between the brushes and commutator as the commutator end cover is being removed or installed could damage the brushes.*

2. Remove the two bolts (20) and pull commutator end cover (23) free of starter/generator housing (24) **(Figure 13-16, Page 13-14)**.
3. Remove terminal hardware (31), screws and lock washers (25), brush holder assembly (26), brush springs (28), and brushes (27). Make note of the routing of the brushes and wires between the brush holder assembly and the inside of the commutator end cover for later reassembly **(Figure 13-17, Page 13-14)**. **See following NOTE.**

NOTE: *Clean and inspect the armature/commutator and the bearings.* ***See Disassembly of the Starter/Generator to Service the Armature/Commutator on page 13-17.***

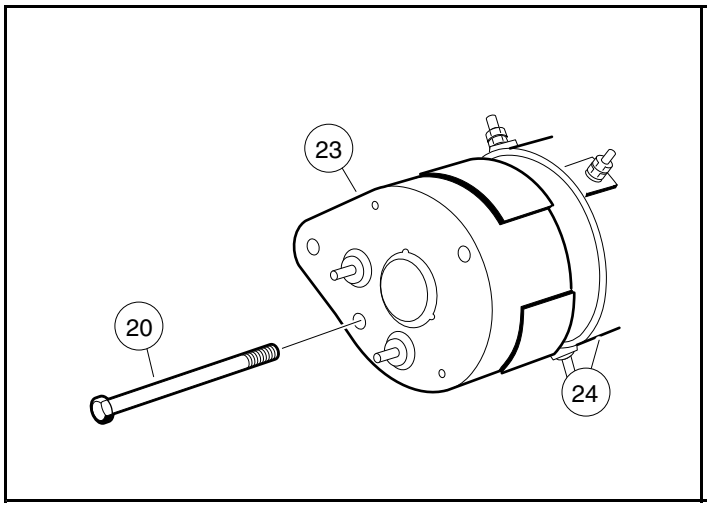

487

Figure 13-16 Commutator End Cover

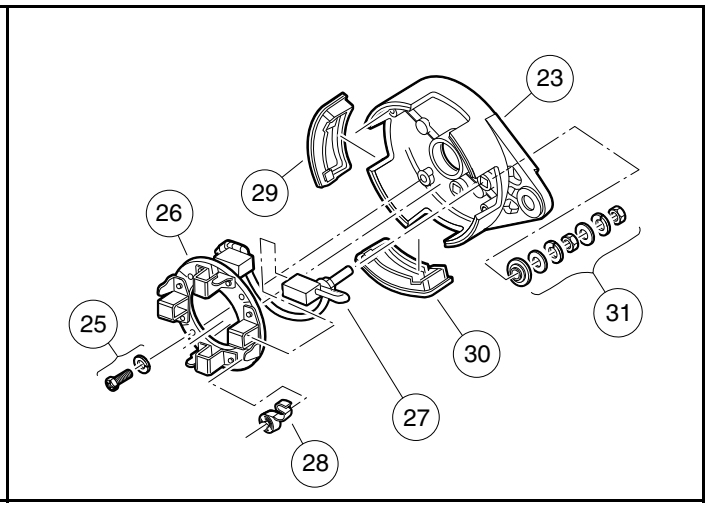

1339

Figure 13-17 Brush Covers and Brushes

BRUSH INSPECTION AND REPLACEMENT

1. Visually inspect brushes. Replace brushes that are cracked or severely chipped.
2. Check the length of each brush. If the overall length of any brush is less than 0.79 inch (20 mm), replace all four brushes **(Figure 13-18, Page 13-15)**.

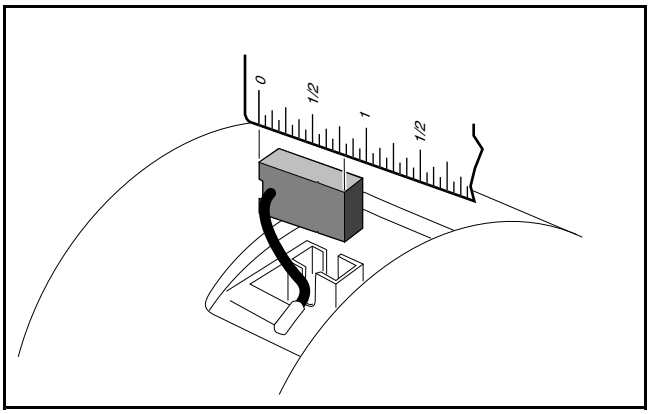

1340

Figure 13-18 Inspect Brushes

BRUSH SPRING INSPECTION AND REPLACEMENT

1. Visually inspect springs. Replace all four springs if any spring is discolored from heat (straw or bluish in color).
2. Install the four brushes (27) into their holders and insert the four brush springs (28) **(Figure 13-17, Page 13-14)**. Insert the brush wiring terminal studs through the commutator end cover (23) and assemble using the terminal hardware (31). Route the brush wiring between the brush holder assembly (26) and the inside of the commutator end cover cover (23) and assemble using the screws and lock washers (25). Using a spring scale, test brush spring tension. If any spring has a tension less than 14.8 ounces (4.1 N), replace all four springs **(Figure 13-19, Page 13-16)**. **See following CAUTION.**

⚠ CAUTION

- **When checking brush spring tension, do not push springs beyond the point they would normally be if there were new brushes installed. Exerting excessive force or pushing brush springs beyond their normal maximum extension point will damage springs.**

CAUTION CONTINUED ON NEXT PAGE

⚠ CAUTION

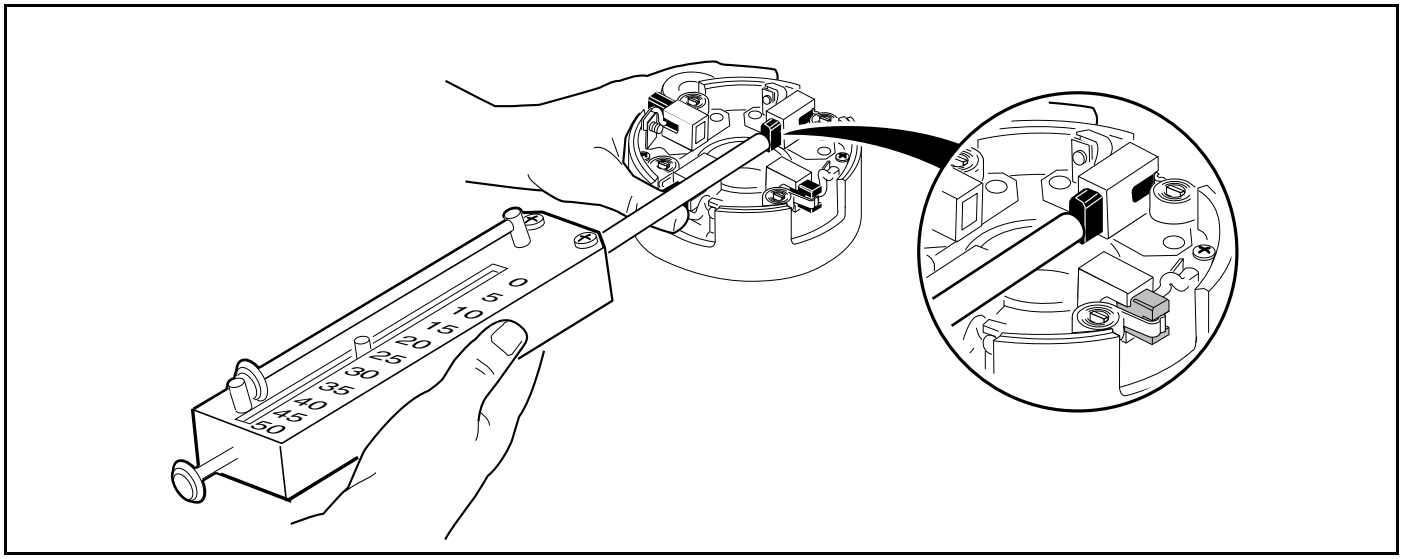

490

Figure 13-19 Brush Spring Tension Test

STARTER/GENERATOR ASSEMBLY

1. To prevent contact between the brushes and commutator as the commutator is installed, and possible damage to the brushes, pull back each brush spring and pull the brushes back from the center of the commutator end cover. The springs will rest on the sides of the brushes and help prevent them from sliding towards the center of the cover **(Figure 13-20, Page 13-16)**.
2. Install the commutator end cover (23) onto the armature shaft. Orient the commutator end cover with the field coil housing as shown. Install two M5 x 20 mm bolts (20) and tighten to 60 in-lb (6.8 N·m) **(Figure 13-16, Page 13-14)**.
3. Push the brushes down into the holders. Position springs so that brushes are being held against the commutator. Install the brush cover (30) that has the drain hole in it next to the A2 terminal. Install the remaining three brush covers (29) in the openings in the commutator end cover (23) **(Figure 13-17, Page 13-14)**.

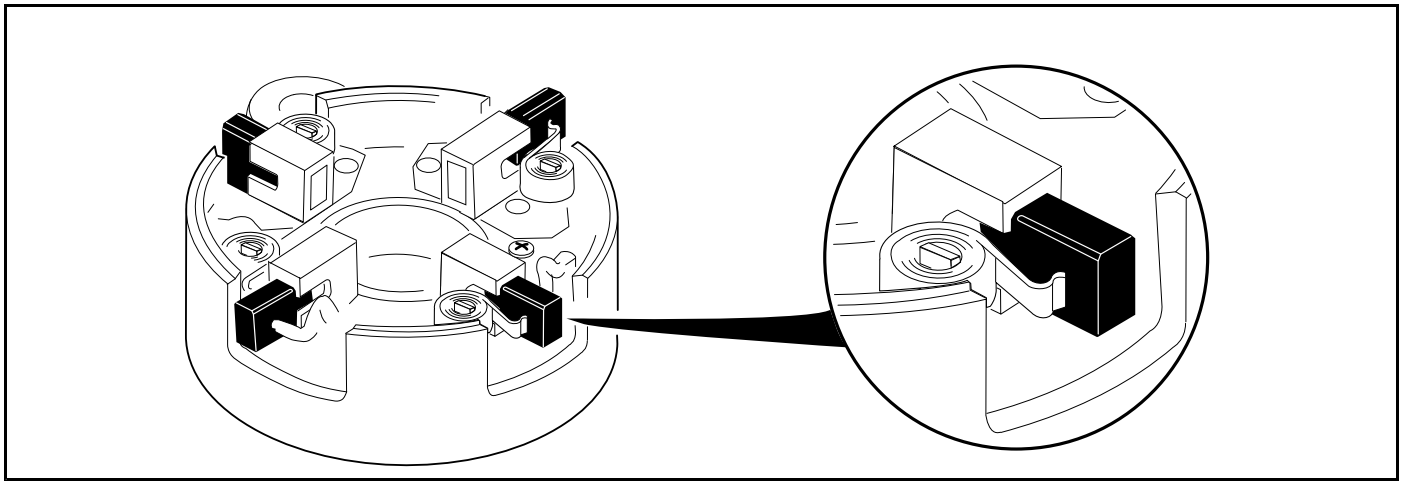

1341

Figure 13-20 Pull Brushes Away from Center of the Commutator End Cover

DISASSEMBLY OF THE STARTER/GENERATOR TO SERVICE THE ARMATURE/COMMUTATOR

1. Remove the commutator end cover to prevent damage to the brushes and armature. **See Disassembly of the Starter/Generator to Service the Brushes on page 13-14.**
2. To separate armature and output end cover assembly from the field coil housing, first remove the two securing bolts (43). Carefully remove armature and output end cover assembly from the field coil housing so components are not damaged.
3. To separate armature (33) from output end cover (36), remove nut (41), lock washer (40), pulley (39). It may be necessary to use the wedge attachment tool (P/N 1012812) to remove the pulley from the shaft.
4. Remove the internal retaining ring (32) to release the bearing (35) and armature (33) from the output end cover (36). **(Figure 13-21, Page 13-17)**.

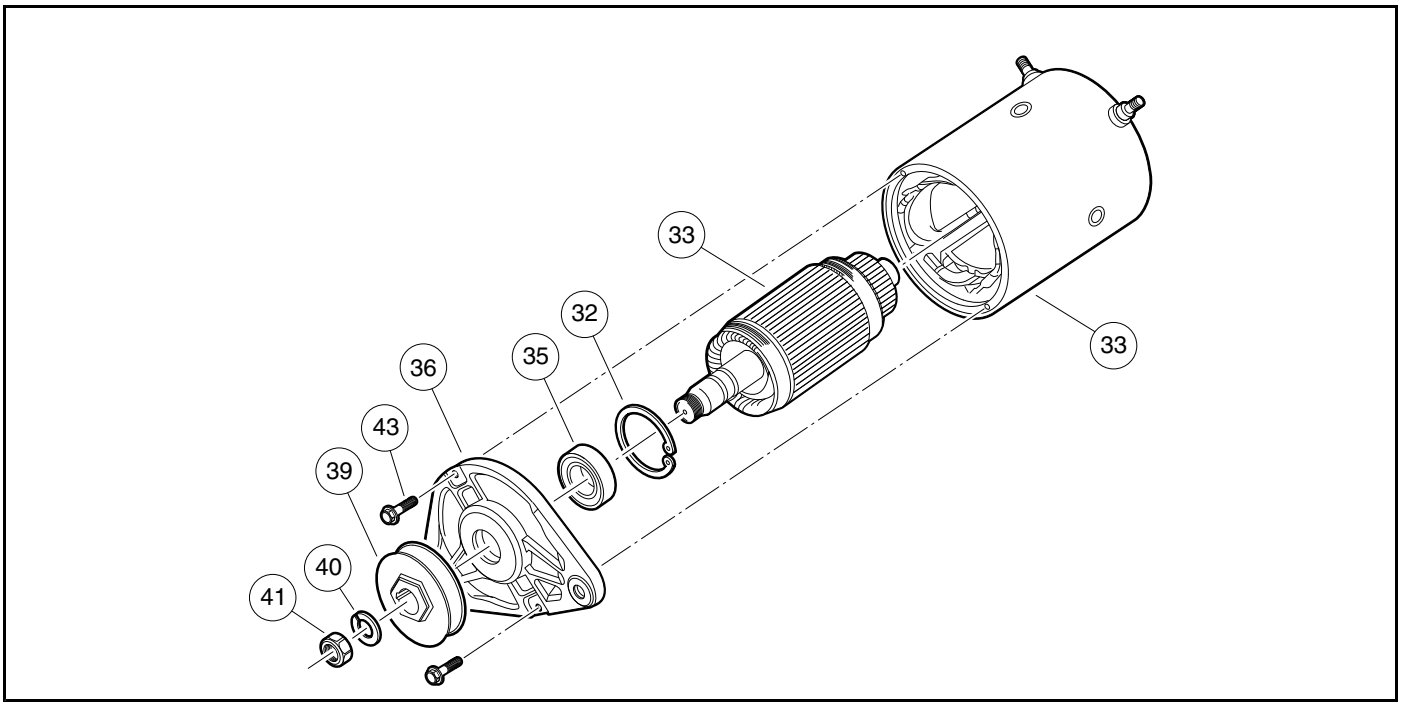

1342

Figure 13-21 Output End Cover Assembly, Armature and Housing

BEARING CLEANING AND INSPECTION

1. Using a clean cloth, wipe the carbon dust from the two bearings. Inspect bearings by spinning them by hand and checking for both axial (A) and radial (B) play **(Figure 13-22, Page 13-18)**.

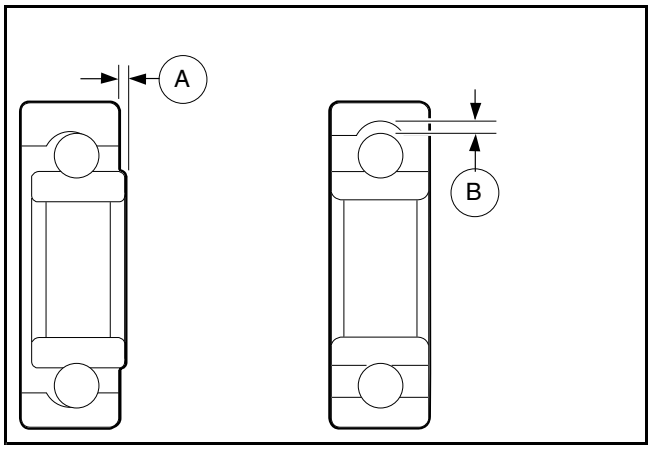

493

Figure 13-22 Bearing Play Inspection

2. Replace the bearing if it is noisy, does not spin smoothly, or has excessive play. Check the bearings and replace if rusted, worn, cracked, or if there is an abnormal color change in the metal of the bearing. Bearings should be replaced if there is extensive wear or pitting on the balls or on the rolling surfaces. Do not remove the bearings unless they are to be replaced.

BEARING REMOVAL

1. Place the wedge attachment tool (P/N 1012812) between the bearing and the armature. Make sure the wedge attachment tool is supporting the inner race of the bearing. If a press is not available, secure a bearing puller (P/N 1012811) to the wedge attachment tool and pull the bearing off of the end of the armature shaft. Support the armature so that it will not drop when the bearing is removed **(Figure 13-23, Page 13-18)**.
2. Slide the bearing retainer ring (32) off of the output end of the shaft **(Figure 13-21, Page 13-17)**.

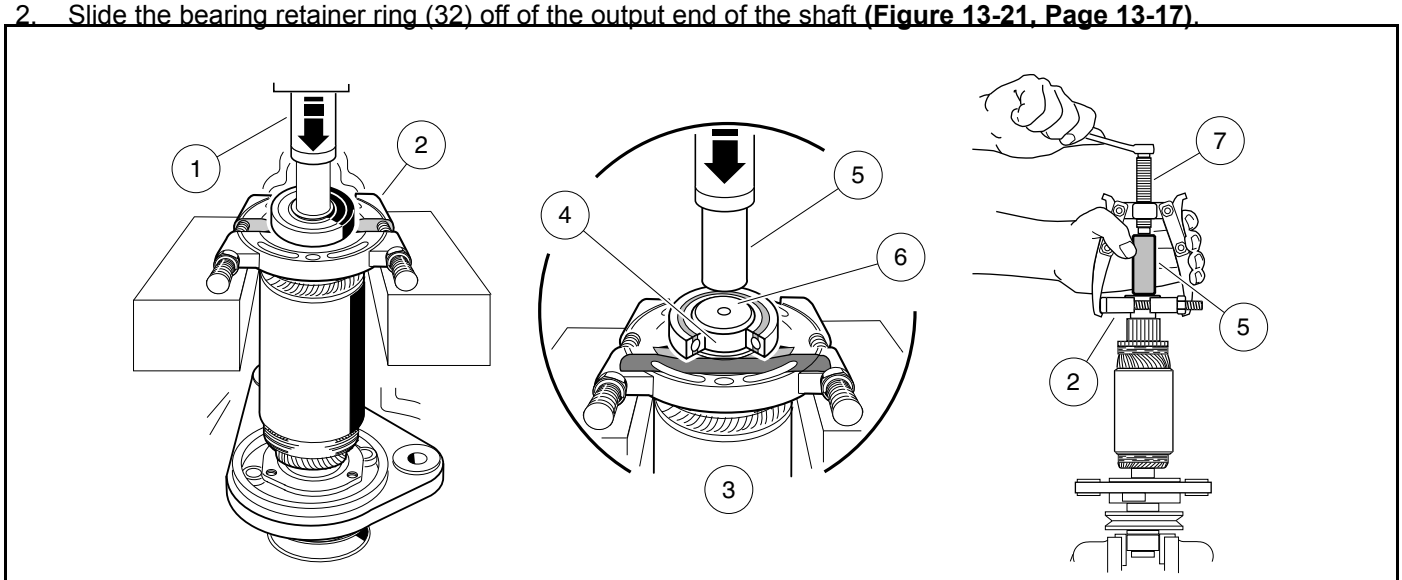

1. Press Ram 2. Wedge Attachment Tool 3. Bearing sectioned for clarity 4. Support inner race of bearing 5. Use a 1/2 inch socket or pipe 6. Press against armature shaft 7. Use bearing puller if a press is not available

494

Figure 13-23 Bearing Removal

FIELD COIL ASSEMBLY

Replace entire field coil housing assembly if coils, pole shoes or terminals are damaged. **(Figure 13-24, Page 13-19)**.

VISUAL INSPECTION OF ARMATURE

Obvious defects can be seen by examining the armature. If an armature has frayed or charred insulation, broken wires or thrown solder, it is obvious without testing that it should be replaced. Faults seen during the visual inspection can aid in diagnosing the original cause of the failure. Items to look for are listed below.

- Burned, charred, or cracked insulation
- Improperly cured varnish
- Thrown solder
- Flared armature windings
- Worn, burned, or glazed commutator
- Loose or raised commutator bars
- Bruised or damaged armature core laminations
- Worn armature bearing or shaft
- Dirty or oily commutator

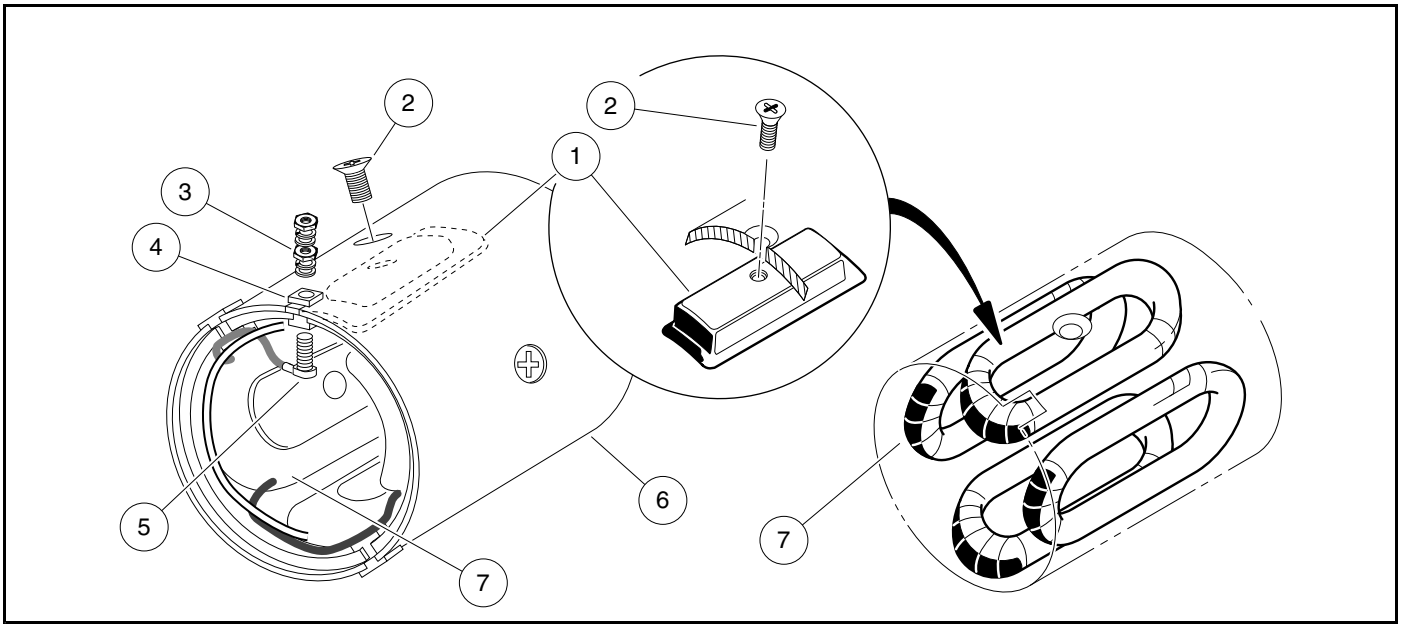

495

Figure 13-24 Field Coil Assembly

COMMUTATOR CLEANING AND INSPECTION

1. Clean the carbon dust, dirt and oil from the commutator. Visually inspect the commutator for worn, burned or glazed areas. Check for loose or raised commutator bars. Slight roughness of the commutator can be polished away with 400 grit (or finer) sandpaper. **See following CAUTION.**

⚠ CAUTION

- **Do not use emery cloth on the commutator. Particles of emery are conductive and may short-circuit the commutator bars. Do not use oil or lubricants on the commutator or brushes.**

2. Using a micrometer, measure the outside diameter at two points along the commutator. If the commutator outside diameter is less than 1.60 inches (40.6 mm), replace the armature and bearings **(Figure 13-25, Page 13-20)**.

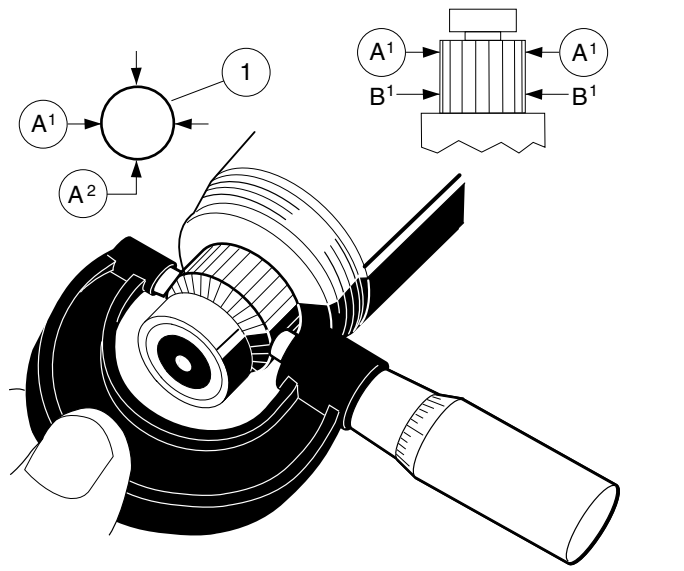

1. Measure each position in two places, 90 degrees apart

496

Figure 13-25 Inspect Commutator

ARMATURE GROUND TEST

⚠ CAUTION

- **Do not submerge armature in solvent.**

NOTE: *Before testing, wipe the armature with a clean cloth and remove carbon dust and metal particles from between commutator bars.*

Using a multimeter set on 200 (ohms), place the positive (+) probe on the commutator bars and the negative (–) probe on the armature core. The reading should be no continuity. If the reading is incorrect, replace the armature and the two bearings **(Figure 13-26, Page 13-21)**.

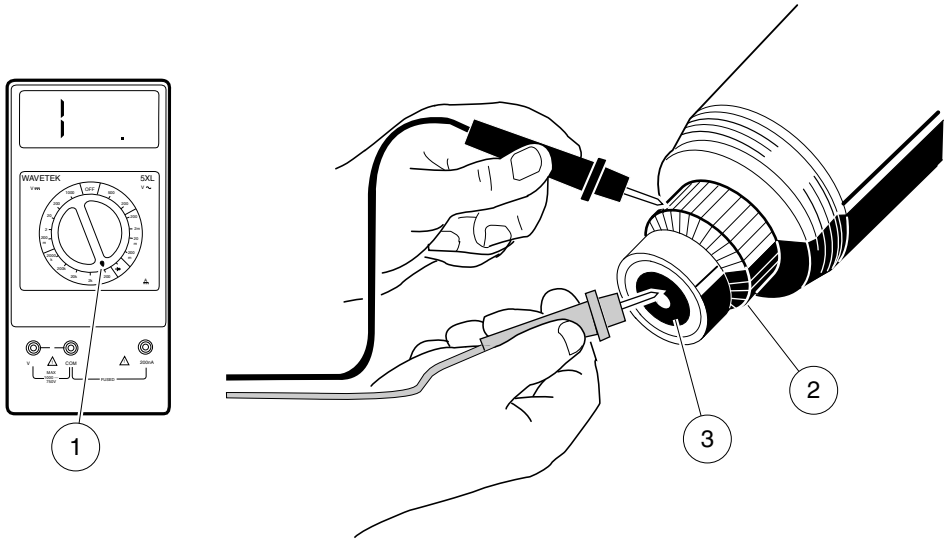

1. 200 Ohms Setting 2. Commutator 3. Armature Shaft

497

Figure 13-26 Armature Ground Test

VISUAL INSPECTION OF FIELD COILS

If the insulation on the field coils appears blackened or charred, the serviceability of the coils is questionable. Burned or scorched coil insulation indicates the starter/generator has overheated due to overloads or grounded or shorted coil windings. Be sure the insulators are tight in the housing.

STARTER/GENERATOR REWORK

Any rework must be performed by a qualified technician. Starter/generator service specifications are listed in the following table.

ITEM	SERVICE LIMIT
Commutator diameter (minimum)	1.60 in. (41 mm)
Concentric with armature shaft within	0.002 in. (0.051 mm)
Minimum commutator diameter for reslotting	1.65 in. (42 mm)
Undercut (Commutator must have a minimum diameter of 1.65 in (42 mm) for reslotting):	0.050 in. (1.3 mm)
Dielectric strength	500 VAC for one minute
Armature insulation resistance	0.2M (ohms) at 500 VDC
Starter field coil resistance	0.006-0.01 (ohms)
Generator field coil resistance	4.5-5.5 (ohms)

STARTER/GENERATOR ASSEMBLY

1. Slide the bearing retainer (32) onto the output end of the armature shaft (33) **(Figure 13-21, Page 13-17)**.
2. Press a new ball bearing (35) onto the output end of the armature **(Figure 13-21, Page 13-17)**. Press a new ball bearing onto the commutator end of the armature shaft. **See following CAUTION.**

⚠ CAUTION

- **To prevent damage to the retainer, use care while pressing new bearing onto the output end of the shaft.**
- **Press against the inner race of the new bearing until it is fully seated.**

3. Install the drive end cover (36) onto the armature. Secure the bearing retainer ring (32) **(Figure 13-21, Page 13-17)**.
4. Slide the housing with field coils over the armature. Use the tapped mounting holes to align housing to the cover, rotate and orient as shown.

NOTE: *The terminal insulators should be on the commutator end of the housing.*

5. To prevent contact between the brushes and commutator as the commutator cover is installed, and possible damage to the brushes, lift the brush springs out of the notches in the brushes and pull the brushes back from the center of the commutator end cover. The springs will rest on the sides of the brushes and help prevent them from sliding towards the center of the cover **(Figure 13-20, Page 13-16)**.
6. Install the commutator end cover (23) onto the armature shaft. Use the tapped mounting holes to align housing to the cover, rotate and orient as shown. Install the two M6 x 180 mm bolts (20), and tighten to 60 in-lb (6.8 N·m) **(Figure 13-16, Page 13-14)**.
7. Push the brushes down into the holders. Place springs into the notches in the brushes. Install the brush cover (30) that has the drain hole in it next to the A2 terminal. Install the remaining three brush covers (29) in the openings in the commutator end cover (23) **(Figure 13-17, Page 13-14)**.
8. Install the belt pulley (39) onto the shaft, and install the lock washer (40) and M14 nut (41). Tighten the nut to 30 ft-lb (40.7 N·m) **(Figure 13-21, Page 13-17)**.

STARTER/GENERATOR INSTALLATION

1. Install the green wire from the F1 terminal to the A1 terminal on the starter/generator **(Figure 13-15, Page 13-13)**. Install a flat washer, lock washer, and nut onto each terminal and tighten to 48 in-lb (5.4 N·m).
2. Install two 3/8-inch hex-head pivot bolts (5) into the mounting bracket with the heads of the bolts facing toward the driver-side of the vehicle. Position the starter/generator in the mounting bracket so that the bolts will go through the starter/generator before going through the bracket. Install a lock nut (7) onto each bolt. Tighten to finger tight **(Figure 13-27, Page 13-23)**.
3. Install the adjustment bolt (11) through the adjusting bracket (4) and then through the starter/generator. Install a lock washer (9) and 5/16-inch nut (12) onto the end of the adjustment bolt (11). Tighten to finger tight.
4. Install the belt (3), then tighten the mounting bolts. **See Belt Tension Adjustment on page 13-23.**
5. Connect the yellow wire from the voltage regulator to the DF terminal on the starter/generator. Install a flat washer, lock washer, and nut onto the terminal. Tighten the nut to 18 in-lb (2.0 N·m).
6. Install the white wire from the solenoid to the F2 terminal on the starter/generator. Install the black wire from the frame to the A2 terminal on the starter/generator. Install a flat washer, lock washer and nut onto each terminal, and tighten the nut to 45 in-lb (5.1 N·m). Bundle and tie wrap excess wire.
7. Connect battery and spark plug wire(s). **See Connecting the Battery – Gasoline Vehicles on page 1-3.**

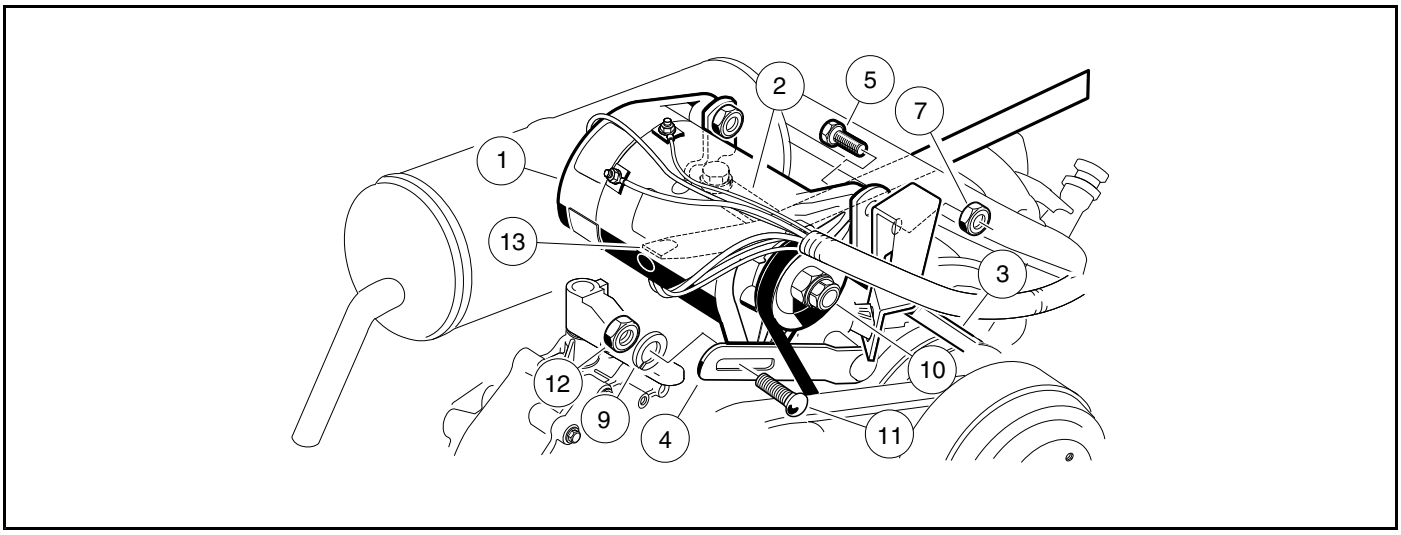

1390

Figure 13-27 Starter/Generator Installation

BELT TENSION ADJUSTMENT

Belt tension should be checked periodically. If the belt slips when starter/generator motor operates, adjust belt to correct tension.

1. Disconnect battery and spark plug wire(s). **See Disconnecting the Battery – Gasoline Vehicles on page 1-3.**
2. Remove the access panel on the vehicle.
3. Make sure the two pivot bolts (5) on the mounting bracket are finger tight. The carriage bolt (11) and hex nut (12) are to be finger tight also **(Figure 13-27, Page 13-23)**.
4. Push the starter/generator down so it is at the lowest point of its adjustment travel. With the starter/generator belt in place around the drive clutch pulley, install the starter/generator belt (3) around the pulley (10) on the end of the starter/generator.
5. Position a pry bar (13) between the top of the starter/generator mounting bracket (2) and the underside of the starter/generator by passing the pry bar under the exhaust header.
6. While holding the pry bar, measure the belt tension using a Krikit® gauge (1) (available at NAPA® Auto Parts stores), or equivalent. Proper tension for a new starter/generator belt should be 120 lb (534 N) or 70 lb (311 N) for an existing belt **(Figure 13-28, Page 13-24)**.
7. While maintaining the tension, tighten the adjustment nut (12) to 144 in-lb (16.3 N·m). Tighten the two pivot bolts (5) and hex nuts (7) to 23 ft-lb (31.2 N·m) **(Figure 13-27, Page 13-23)**. **See following CAUTION.**

⚠ CAUTION

- **Remove pry bar before starting engine.**

8. Connect battery and spark plug wire(s). **See Connecting the Battery – Gasoline Vehicles on page 1-3.**

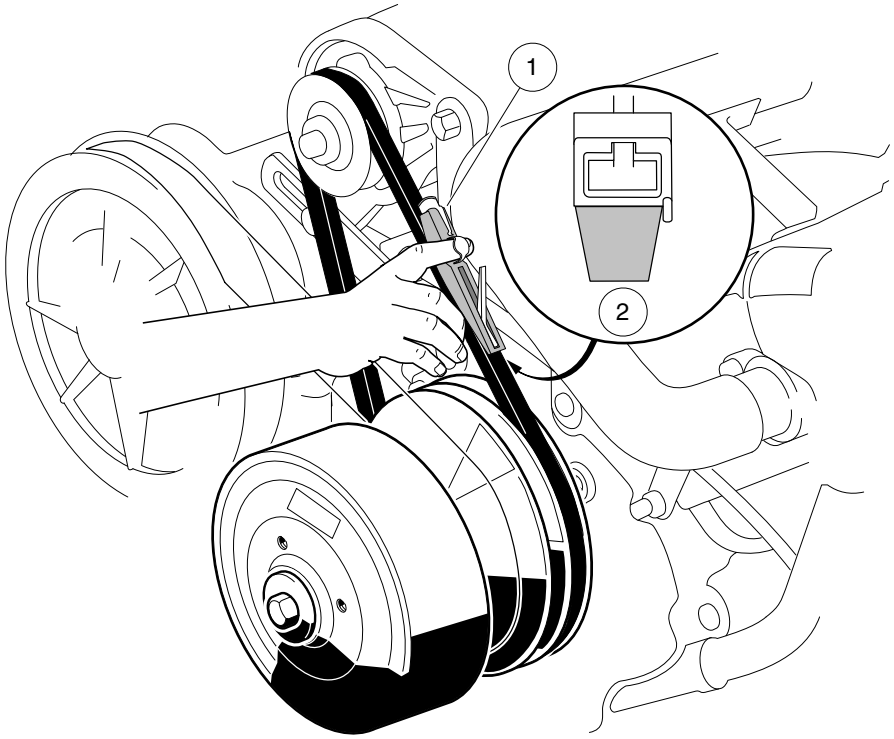

1. Belt Tension Gauge 2. End View

499

Figure 13-28 Belt Tension Gauge

VOLTAGE REGULATOR

See General Warnings on page 1-1.

TESTING THE VOLTAGE REGULATOR

See Test Procedure 11 – Voltage Regulator on page 12-22.

VOLTAGE REGULATOR REMOVAL

1. Disconnect battery and spark plug wire(s). **See Disconnecting the Battery – Gasoline Vehicles on page 1-3.**
2. Disconnect the voltage regulator connector (3) from the wire harness **(Figure 13-29, Page 13-25)**.
3. Remove the voltage regulator mounting screw (2) and remove the voltage regulator (1).

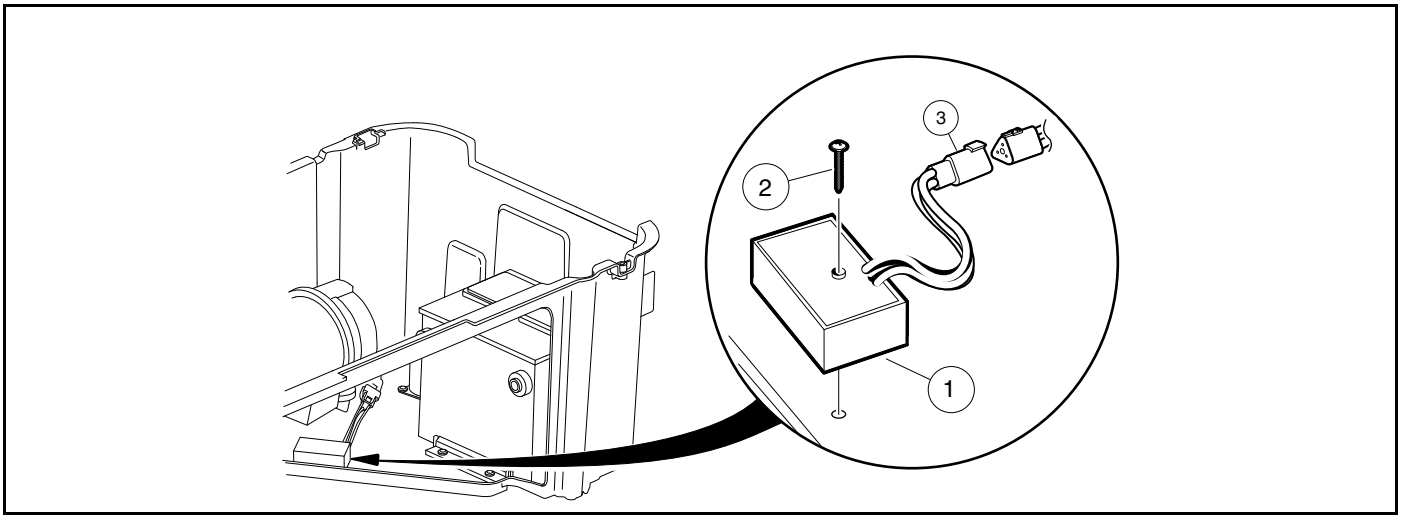

2432

Figure 13-29 Voltage Regulator

VOLTAGE REGULATOR INSTALLATION

1. Position the voltage regulator (1) and install the mounting screw (2) **(Figure 13-29, Page 13-25)**. Tighten screw to 23 in-lb (2.6 N·m).
2. Connect the voltage regulator three-pin connector (3) to the wire harness.
3. Connect battery and spark plug wire(s). **See Connecting the Battery – Gasoline Vehicles on page 1-3.**
4. Place Forward/Reverse handle in NEUTRAL and place the neutral lockout cam in the MAINTENANCE position. Start the engine and check regulator for proper functioning as described in the voltage regulator test procedure. **See Test Procedure 11 – Voltage Regulator on page 11-22. See Test Procedure 11 – Voltage Regulator on page 12-22.**

KEY SWITCH

See General Warnings on page 1-1.

TESTING THE KEY SWITCH

See Test Procedure 17 – Key Switch (Engine Kill Circuit) on page 12-33. See also Test Procedure 4 – Key Switch (Starter Circuit) on page 12-16.

KEY SWITCH REMOVAL

1. Disconnect battery and spark plug wire(s). **See Disconnecting the Battery – Gasoline Vehicles on page 1-3.**
2. Remove the instrument panel.
   2.1. Remove three screws (1) from the instrument panel (2) **(Figure 13-30, Page 13-26)**.
   2.2. Rotate the instrument panel up and away from the dash to disengage the tabs at the top of the instrument panel.
   2.3. Disconnect the electrical connector (3) to the instrument panel.

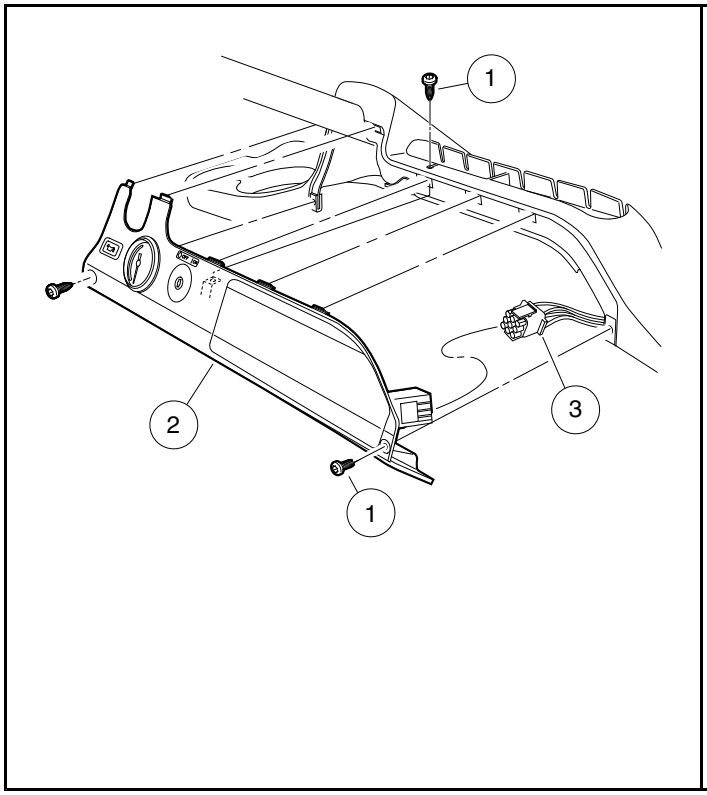

2433
Figure 13-30 Instrument Panel Removal

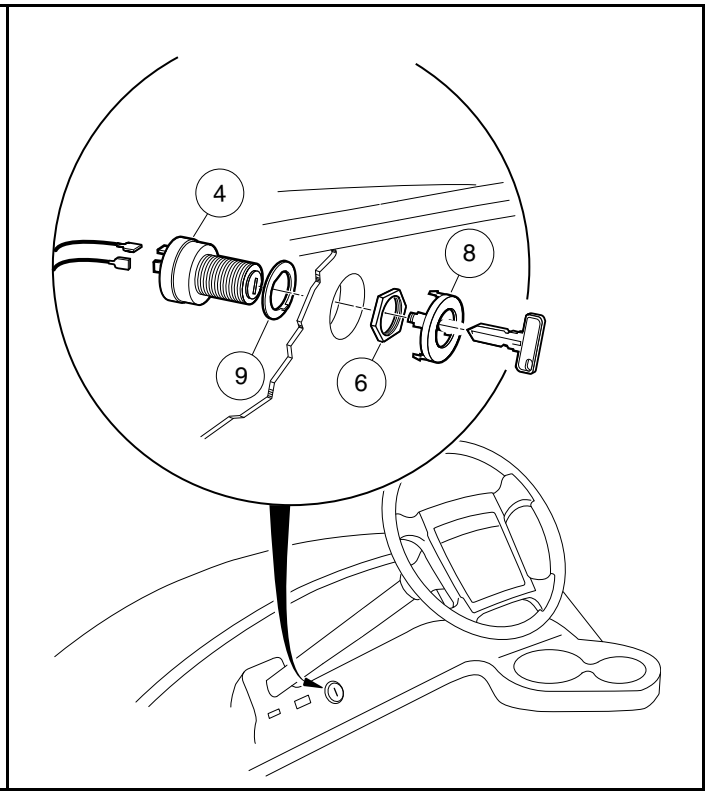

703
Figure 13-31 Key Switch

3. Disconnect the wires from the key switch.
4. From the back of the instrument panel, push down on the retaining tabs surrounding the key switch (4) and remove the key switch cap (8). Hold the key switch and remove the switch retaining nut (6) from the outside of the instrument panel **(Figure 13-31, Page 13-26)**.

KEY SWITCH INSTALLATION

1. Reverse removal procedures to install key switch in the instrument panel. Connect wires to key switch.
2. Install the instrument panel.
   2.1. Connect the electrical connector (3) **(Figure 13-30, Page 13-26)**.
   2.2. Position the instrument panel (2) on the dash assembly. Make sure tabs on upper edge properly engage with the corresponding slots on the dash assembly. Ensure that there are no wires exposed or pinched during positioning.
   2.3. Secure instrument panel to the dash assembly with three screws (1). Tighten screws to 1.8 ft-lb (2.5 N·m).
3. Connect battery and spark plug wire(s). **See Connecting the Battery – Gasoline Vehicles on page 1-3.**

SOLENOID

See General Warnings on page 1-1.

TESTING THE SOLENOID

See Test Procedure 6 – Solenoid on page 12-18.

SOLENOID REMOVAL

1. Disconnect battery and spark plug wire(s). **See Disconnecting the Battery – Gasoline Vehicles on page 1-3.**
2. Disconnect all the wires from the solenoid.
3. Remove the two screws securing the solenoid in place.
4. Remove the solenoid.

SOLENOID INSTALLATION

1. Install the solenoid in the vehicle. Use two screws to secure the solenoid and tighten to 14 in-lb (1.6 N·m).
2. Connect the ring terminal with the 10-gauge white wire and the 16-gauge red wire on a large post on the solenoid. **See Wiring Diagrams – GCOR on page 11-6. See Wiring Diagrams – Throttle Position Sensor on page 12-6.**
3. Connect the ring terminal with the two 10-gauge red wires to the other large post on the solenoid. **See Wiring Diagrams – GCOR on page 11-6. See Wiring Diagrams – Throttle Position Sensor on page 12-6.**
4. Connect the 16-gauge blue wire from the main harness to a small post on the solenoid.
5. Connect the 16-gauge orange wire from the main harness to the other small post on the solenoid. **See Wiring Diagrams – GCOR on page 11-6. See Wiring Diagrams – Throttle Position Sensor on page 12-6.**
6. Tighten the hex nuts on the large solenoid posts to 55 in-lb (6.2 N·m). Tighten the nuts on the small solenoid posts to 22 in-lb (2.5 N·m).
7. Connect battery and spark plug wire(s). **See Connecting the Battery – Gasoline Vehicles on page 1-3.**

FUSE

See General Warnings on page 1-1.

TESTING THE FUSE

See Test Procedure 2 – Fuse on page 12-14.

FUSE REMOVAL

1. Disconnect battery. **See Disconnecting the Battery – Gasoline Vehicles on page 1-3.**
2. Remove cover from fuse holder.
3. Remove the fuse from the fuse holder.

FUSE INSTALLATION

1. Install the fuse. **See following WARNING.**

⚠ WARNING

- **If a fuse is blown, determine the cause of the failure and make necessary repairs before installing a new fuse. Use the appropriately rated fuse; if a fuse with a higher amp rating is used, damage to the vehicle electrical system may occur.**

2. Install the cover on the fuse holder.
3. Connect battery. **See Connecting the Battery – Gasoline Vehicles on page 1-3.**

LIMIT SWITCHES

ACCELERATOR PEDAL LIMIT SWITCH

See General Warnings on page 1-1.

Testing the Accelerator Pedal Limit Switch

See Test Procedure 5 – GCOR on page 11-17.

The accelerator pedal limit switch is housed inside the throttle position sensor. The throttle position sensor itself is not intended to be replaced. If sensor is determined to need replacing through test procedures found in this manual, the accelerator pedal assembly must be replaced.

KILL LIMIT SWITCH

See General Warnings on page 1-1.

Testing the Kill Limit Switch

See Test Procedure 5 – GCOR on page 11-17.

The kill limit switch is housed inside the throttle position sensor. The throttle position sensor itself is not intended to be replaced. If sensor is determined to need replacing through test procedures found in this manual, the accelerator pedal assembly must be replaced.

NEUTRAL LOCKOUT LIMIT SWITCH

See General Warnings on page 1-1.

Testing the Neutral Lockout Limit Switch

See Test Procedure 7 – Neutral Lockout Limit Switch on page 12-19.

Neutral Lockout Limit Switch Removal

1. Disconnect battery and spark plug wire(s). **See Disconnecting the Battery – Gasoline Vehicles on page 1-3.**
2. Disconnect the wires from the neutral lockout limit switch (5) located on the back of the Forward/Reverse shifter assembly **(Figure 13-32, Page 13-29)**.
3. Remove two nuts (2) and washers (6) from the neutral lockout limit switch (5) and slide the neutral lockout limit switch off of the screws.

Neutral Lockout Limit Switch Installation

1. Install the neutral lockout limit switch (5) with two washers (6) and two nuts (2) **(Figure 13-32, Page 13-29)**. Tighten to 5 in-lb (0.6 N·m). Place the Forward/Reverse handle in REVERSE to make sure that both switches actuate. **See following CAUTION.**

CAUTION

- **Do not overtighten the retaining nuts. If the nuts are overtightened, limit switches could be damaged.**

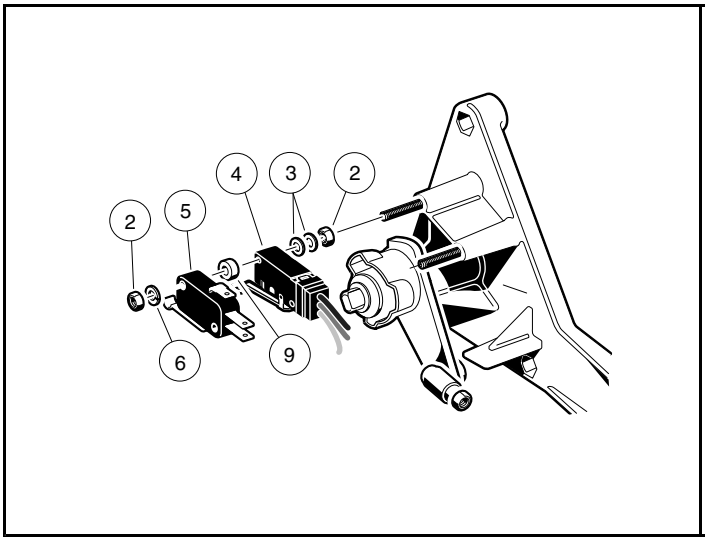

2434
Figure 13-32 Neutral Lockout and Reverse Buzzer Limit Switches

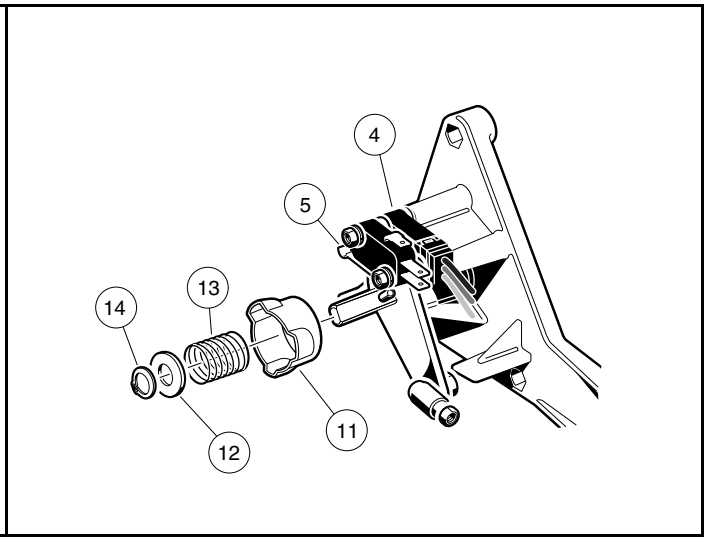

2435
Figure 13-33 Neutral Lockout Cam

2. Connect the black wire to common (COM) terminal, the green wire to the normally open (NO) terminal and the white wire to the normally closed (NC) terminal of the neutral lockout limit switch **(Figure 13-32, Page 13-29)**.
3. Connect battery and spark plug wire(s). **See Connecting the Battery – Gasoline Vehicles on page 1-3.**
4. Place the Forward/Reverse handle in NEUTRAL. The neutral lockout cam should be in the OPERATE position. Make sure everyone is clear of the vehicle. Turn the key switch ON. The engine should not crank when pressing the accelerator. If the engine does crank, turn the key switch OFF and re-adjust the shift linkage.
5. Test drive the vehicle in both forward and reverse for proper operation.

NEUTRAL LOCKOUT CAM

See General Warnings on page 1-1.

If the cam lobes have worn to the point where they will no longer activate the neutral lockout limit switch, the cam must be replaced.

TESTING THE NEUTRAL LOCKOUT CAM

See Test Procedure 23 – Neutral Lockout Cam on page 12-35.

NEUTRAL LOCKOUT CAM REMOVAL

1. Disconnect battery and spark plug wire(s). **See Disconnecting the Battery – Gasoline Vehicles on page 1-3.**
2. Remove the external snap ring (14) **(Figure 13-33, Page 13-29)**.
3. Remove the plastic washer (12) and the spring (13).
4. Remove the cam (11).

NEUTRAL LOCKOUT CAM INSTALLATION

1. Install the cam (11) **(Figure 13-33, Page 13-29)**.
2. Install the spring (13) and the plastic washer (12).
3. Install the external snap ring (14) onto the shaft. Be sure the snap ring is installed in the groove on the shaft.
4. Connect battery and spark plug wire(s). **See Connecting the Battery – Gasoline Vehicles on page 1-3.**

REVERSE WARNING BUZZER

See General Warnings on page 1-1.

TESTING THE REVERSE WARNING BUZZER

See Test Procedure 20 – Reverse Buzzer on page 12-34.

REVERSE WARNING BUZZER REMOVAL

1. Disconnect battery and spark plug wire(s). **See Disconnecting the Battery – Gasoline Vehicles on page 1-3.**
2. Remove the instrument panel. **See Key Switch Removal on page 13-26.**
3. Disconnect the wires from the reverse warning buzzer (2) **(Figure 13-34, Page 13-31)**.
4. Remove the two mounting screws (3) securing the buzzer to the instrument panel.

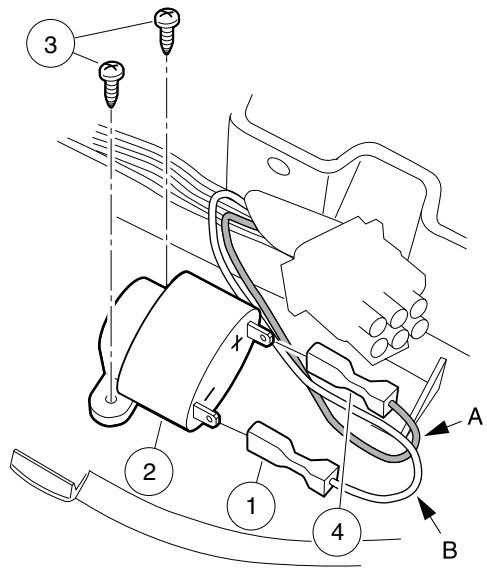

A, Red/White wire B. Black wire

711

Figure 13-34 Reverse Buzzer

REVERSE WARNING BUZZER INSTALLATION

1. Install the screws (3) through the buzzer bracket tabs and tighten to 3.5 in-lb (0.40 N·m) **(Figure 13-34, Page 13-31)**.
2. Connect the black wire (1) from the wire harness to the negative (–) terminal on the buzzer.
3. Connect the red/white wire (4) from the wire harness to the positive (+) terminal on the buzzer.
4. Install the instrument panel.
   - 4.1. Connect the electrical connector (3) **(Figure 13-30, Page 13-26)**.
   - 4.2. Position the instrument panel (2) on the dash assembly. Make sure tabs on upper edge properly engage with the corresponding slots on the dash assembly. Ensure that there are no wires exposed or pinched during positioning.
   - 4.3. Secure instrument panel to the dash assembly with three screws (1). Tighten screws to 1.8 ft-lb (2.5 N·m).
5. Connect battery and spark plug wire(s). **See Connecting the Battery – Gasoline Vehicles on page 1-3.**
6. Shift the Forward/Reverse handle to the REVERSE position. The buzzer should sound.

REVERSE BUZZER LIMIT SWITCH

See General Warnings on page 1-1.

TESTING THE REVERSE BUZZER LIMIT SWITCH

See Test Procedure 19 – Reverse Buzzer Limit Switch on page 12-34.

REVERSE BUZZER LIMIT SWITCH REMOVAL

1. Disconnect battery and spark plug wire(s). **See Disconnecting the Battery – Gasoline Vehicles on page 1-3.**
2. Disconnect the wires from the reverse buzzer limit switch (4) located on the back of the Forward/Reverse assembly **(Figure 13-32, Page 13-29)**.
3. Remove the nuts (2) and washers (6) from the neutral lockout limit switch (5) and slide the neutral lockout limit switch off of the screws. Do not disconnect the wires.
4. Remove the spacers (9) from the reverse buzzer limit switch (4) and slide the reverse buzzer limit switch off the screws.

REVERSE BUZZER LIMIT SWITCH INSTALLATION

1. Install the reverse buzzer limit switch (4), and then install two spacers (9) against the limit switch **(Figure 13-32, Page 13-29)**.
2. Install the neutral lockout limit switch (5) with two washers (6) and two nuts (2). Tighten to 5 in-lb (0.6 N·m). **See following CAUTION.**

CAUTION

- **Do not overtighten the retaining nuts. If the nuts are over tightened, limit switches could be damaged.**

3. Place the Forward/Reverse handle in REVERSE and make sure that both switches actuate.
4. Connect the orange wire to the common (COM) terminal and the red/white wire to the normally open (NO) terminal of the reverse buzzer limit switch (4) **(Figure 13-32, Page 13-29)**.
5. Connect battery and spark plug wire(s). **See Connecting the Battery – Gasoline Vehicles on page 1-3.**
6. Shift the Forward/Reverse handle to the REVERSE position. The buzzer should sound.

LOW OIL WARNING LIGHT

See General Warnings on page 1-1.

TESTING THE LOW OIL WARNING LIGHT

See Test Procedure 22 – Low Oil Warning Light on page 12-35.

LOW OIL WARNING LIGHT REMOVAL

1. Disconnect battery and spark plug wire(s). **See Disconnecting the Battery – Gasoline Vehicles on page 1-3.**
2. Remove the instrument panel. **See Key Switch Removal on page 13-26.**
3. Disconnect the wires from the low oil warning light (11) **(Figure 13-35, Page 13-33)**.
4. Press the retaining tabs and remove the low oil warning light from the instrument panel.

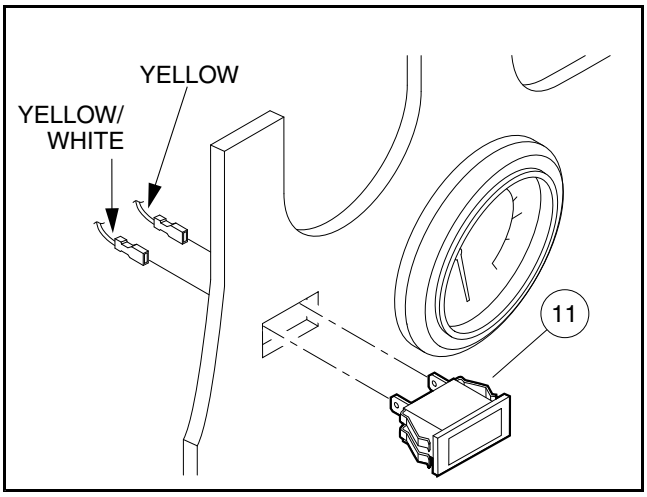

2436

Figure 13-35 Low Oil Warning Light

LOW OIL WARNING LIGHT INSTALLATION

1. Push a new unit into hole in instrument panel until plastic tabs engage **(Figure 13-35, Page 13-33)**.
2. Connect yellow and yellow/white wires from the wire harness to the low oil warning light.
3. Install the instrument panel.
   3.1. Connect the electrical connector (3) **(Figure 13-30, Page 13-26)**.
   3.2. Position the instrument panel (2) on the dash assembly. Make sure tabs on upper edge properly engage with the corresponding slots on the dash assembly. Ensure that there are no wires exposed or pinched during positioning.
   3.3. Secure instrument panel to the dash assembly with three screws (1). Tighten screws to 1.8 ft-lb (2.5 N·m).
4. Connect battery and spark plug wire(s). **See Connecting the Battery – Gasoline Vehicles on page 1-3.**

FUEL GAUGE

See General Warnings on page 1-1.

With the key switch in the OFF position, the fuel gauge reads empty. When the key switch is turned to ON, the fuel gauge becomes active.

TESTING THE FUEL GAUGE

See Test Procedure 26 – Fuel Gauge on page 12-37.

FUEL GAUGE REMOVAL

1. Disconnect battery and spark plug wire(s). **See Disconnecting the Battery – Gasoline Vehicles on page 1-3.**
2. Remove the instrument panel. **See Key Switch Removal on page 13-26.**
3. Disconnect the three wires from the fuel gauge **(Figure 13-36, Page 13-34)**.
4. Remove the two hex nuts (3) and lock washers (4) from the threaded studs on the back of the gauge. Remove the mounting bracket (5) from the back side of the fuel gauge (2) and remove the fuel gauge from the instrument panel.

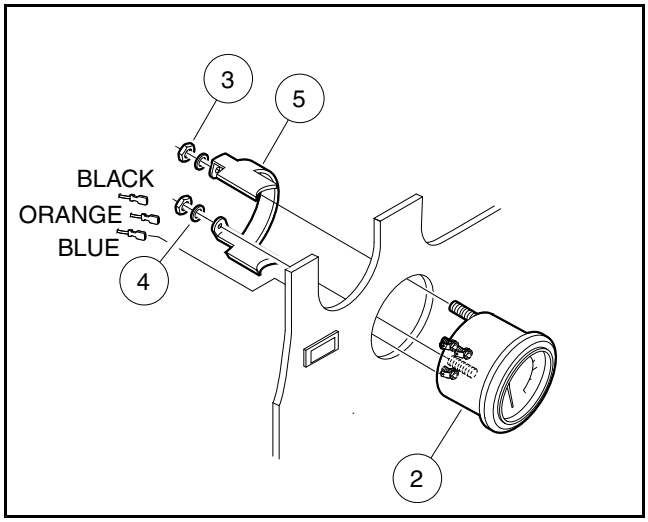

2437

Figure 13-36 Fuel Gauge Installation

FUEL GAUGE INSTALLATION

1. Install a new fuel gauge into hole in instrument panel until flange seats against panel **(Figure 13-36, Page 13-34)**.
2. Slide the mounting bracket (5) onto the two threaded studs on the fuel gauge and secure with two lock washers (4) and two hex nuts (3). Tighten to 2.5 in-lb (0.28 N·m). Place one drop of Loctite™ on each hex nut. Do not allow Loctite to come into contact with the fuel gauge casing.
3. Connect the blue wire from the wire harness to the (I) terminal, the orange wire from the wire harness to the (S) terminal, and the black wire from the wire harness to the (G) terminal. **See Wiring Diagrams – GCOR on page 11-6. See Wiring Diagrams – Throttle Position Sensor on page 12-6.**
4. Install the instrument panel.
   - 4.1. Connect the electrical connector (3) **(Figure 13-30, Page 13-26)**.
   - 4.2. Position the instrument panel (2) on the dash assembly. Make sure tabs on upper edge properly engage with the corresponding slots on the dash assembly. Ensure that there are no wires exposed or pinched during positioning.
   - 4.3. Secure instrument panel to the dash assembly with three screws (1). Tighten screws to 1.8 ft-lb (2.5 N·m).
5. Connect battery and spark plug wire(s). **See Connecting the Battery – Gasoline Vehicles on page 1-3.**

FUEL LEVEL SENDING UNIT

See General Warnings on page 1-1.

The fuel level sending unit is an integral part of the fuel tank and should never be removed. Thoroughly test the fuel level sending unit before replacing the fuel tank.

TESTING THE FUEL LEVEL SENDING UNIT

See Test Procedure 25 – Fuel Level Sending Unit on page 12-36.

HOUR METER

See General Warnings on page 1-1.

TESTING THE HOUR METER

See Test Procedure 16 – Hour Meter on page 12-33.
The hour meter displays the number of hours of use in increments of 0.1 hour.

HOUR METER REMOVAL

1. Disconnect battery and spark plug wire(s). **See Disconnecting the Battery – Gasoline Vehicles on page 1-3.**
2. Disconnect the wires from the hour meter (1) **(Figure 13-37, Page 13-36)**.
3. Remove screw (2) to release bracket (3).
4. Remove keeper (4) from hour meter to release meter (1) from bracket (3).

HOUR METER INSTALLATION

1. Install a new hour meter into bracket (3) and secure it by sliding the keeper (4) onto it **(Figure 13-37, Page 13-36)**.
2. Connect wires to the hour meter.
3. Position bracket (3) on the vehicle and secure in place with screw (2).

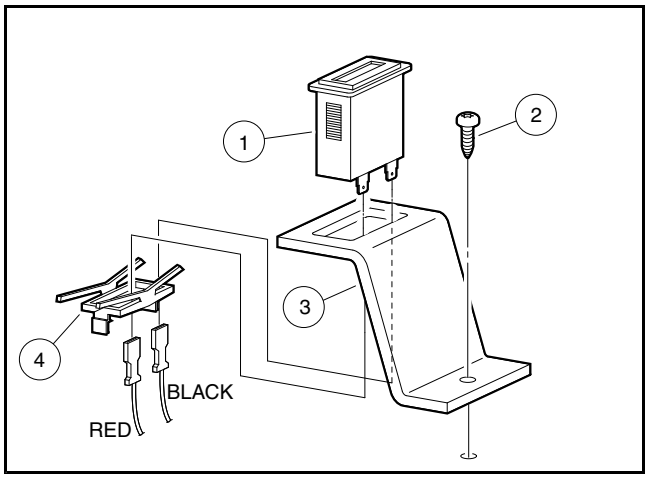

2438

Figure 13-37 Hour Meter Installation

RPM LIMITER

See General Warnings on page 1-1.

TESTING THE RPM LIMITER

See Test Procedure 14 – RPM Limiter on page 12-26.

RPM LIMITER REMOVAL

1. Disconnect battery and spark plug wire(s). **See Disconnecting the Battery – Gasoline Vehicles on page 1-3.**
2. Disconnect the white/black wire from the black wire at the bullet connector located near the RPM limiter **(Figure 13-38, Page 13-37)**.
3. Disconnect the other black wire at the other bullet connector near the RPM limiter.
4. Remove the flange-head bolts from the RPM limiter band and remove the RPM limiter and the damper **(Figure 13-38, Page 13-37)**.

RPM LIMITER INSTALLATION

1. Place the RPM limiter damper on the front of the RPM limiter mounting bracket **(Figure 13-38, Page 13-37)**.
2. Place the RPM limiter on the damper squarely so that RPM limiter fits tightly against the damper.
3. Place the band over the RPM limiter and align the holes. Place the brown wire ring connector onto the flange-head bolt and secure the left side of the band. Use another flange-head bolt to secure the other side of the band. Make sure the band holds the RPM limiter securely in place. Tighten fasteners to 7 ft-lb (9.5 N·m).
4. Connect black wire at the bullet connector to the white/black wire.
5. Connect battery and spark plug wire(s). **See Connecting the Battery – Gasoline Vehicles on page 1-3.**

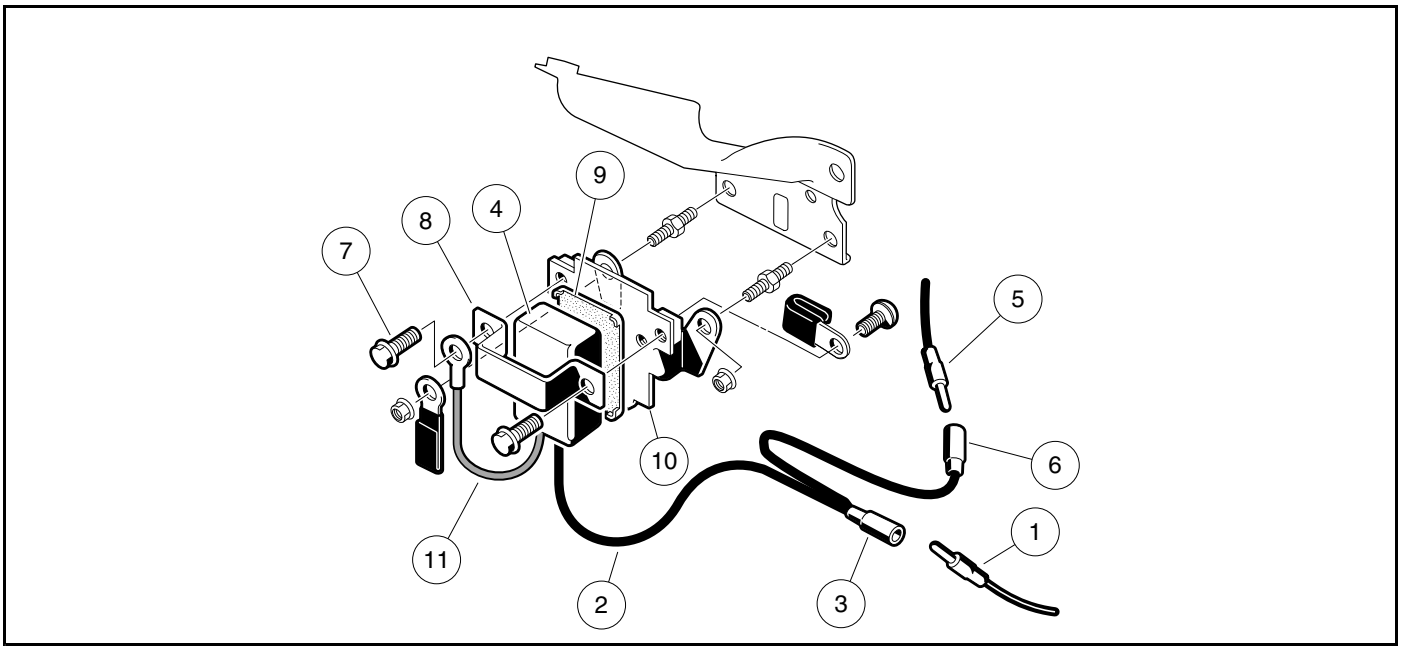

508

Figure 13-38 RPM Limiter Assembly

IGNITION COIL

See General Warnings on page 1-1.

TESTING IGNITION COIL

See Test Procedure 13 – Ignition Spark on page 12-24. See Test Procedure 14 – RPM Limiter on page 12-26. See Test Procedure 15 – Ignition Coil on page 12-27.

IGNITION COIL REMOVAL

1. Disconnect battery and spark plug wire(s). **See Disconnecting the Battery – Gasoline Vehicles on page 1-3.**
2. Remove the governor guard (1) **(Figure 13-39, Page 13-38)**.
3. Remove the muffler. **See Muffler Removal on page 17-1.**
4. Cut the wire tie holding the wire harness to the stiffener (1) and remove the bolts (2) and nuts (3) securing the stiffener to the mounting plate (4) **(Figure 13-40, Page 13-38)**.

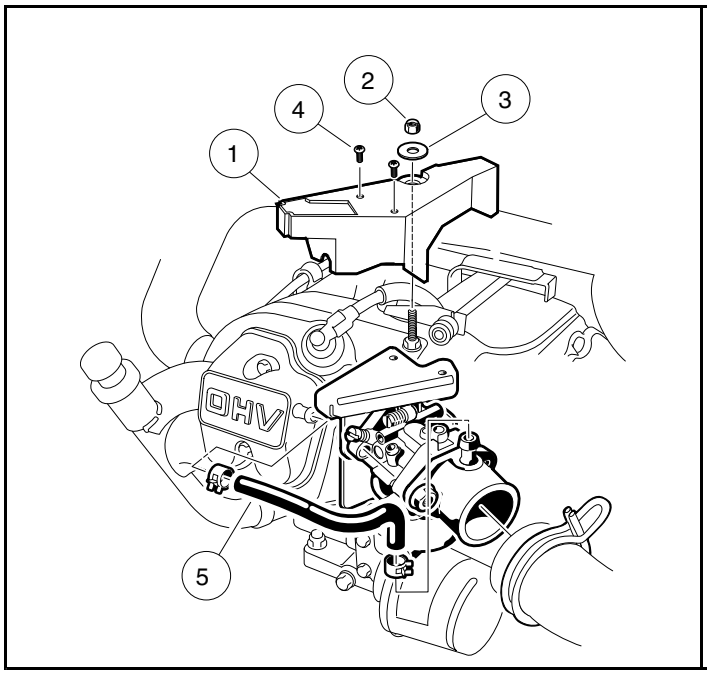

1343
Figure 13-39 Governor Guard Removal

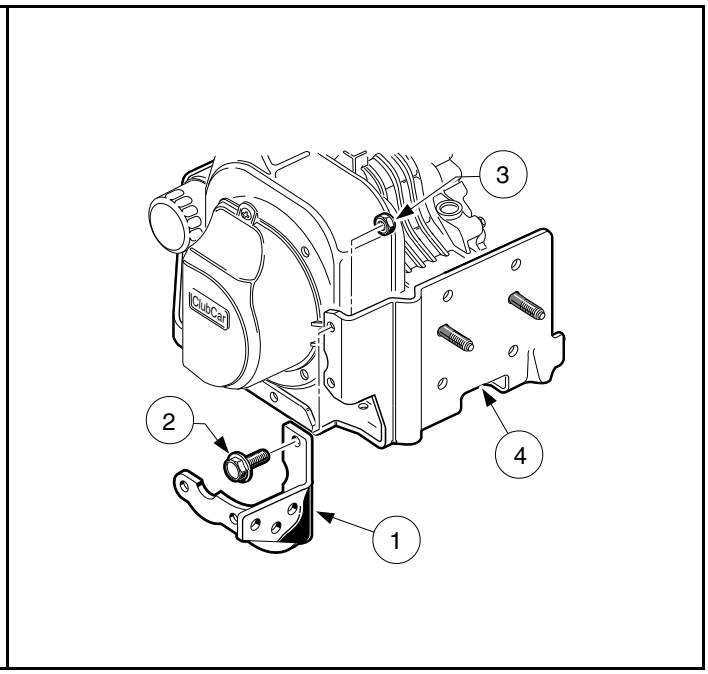

523
Figure 13-40 Stiffener Removal

5. Remove the pan-head bolts (5) securing the fan shroud (8) to the fan housing (9) **(Figure 13-41, Page 13-38)**.
6. Loosen, but do not remove, the three bolts (6) attaching the fan housing as shown **(Figure 13-41, Page 13-38).**
7. Remove the remaining four bolts (10) attaching the fan housing as shown **(Figure 13-41, Page 13-38)**, then while opening the housing, detach the spark plug wire grommet (4) from the housing **(Figure 13-43, Page 13-39)**.
8. Disconnect the 18-gauge black wire (12) from the spade terminal on the ignition coil (11) and remove the coil by removing two bolts (10) **(Figure 13-42, Page 13-38)**.

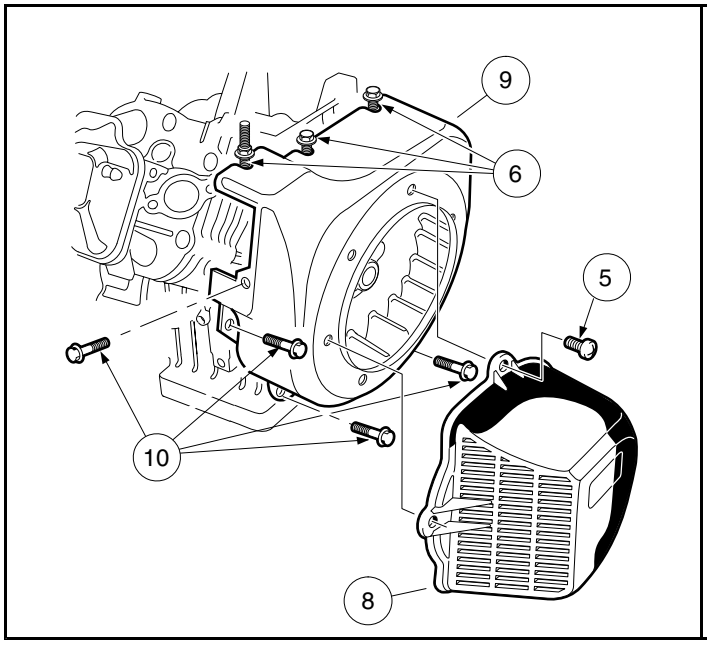

509
Figure 13-41 Fan Housing and Shroud Installation

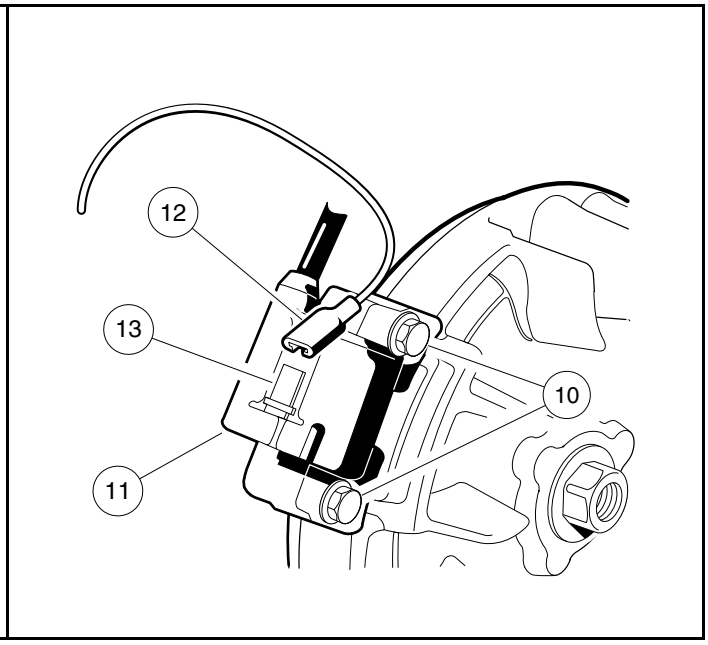

510
Figure 13-42 Coil Removal

IGNITION COIL INSTALLATION

NOTE: *If a new ignition coil is being installed, the spark plug cap, gasket, protector tube and grommet must be removed from the old coil and installed on the new coil.* ***See steps 1 through 8 for procedures to remove and install these existing parts.***

If the existing ignition coil will be remounted, proceed to step 9.

1. Remove the rubber gasket (1) on the plug cap (2) by rolling back the gasket onto the spark plug wire **(Figure 13-43, Page 13-39)**.
2. Remove the cap (2) from the wire by turning the cap counterclockwise three or four revolutions while gently pulling it off the wire.
3. Remove the gasket (1) and protector tube (3) from the old coil. **See following NOTE.**

NOTE: *Moisten the spark plug wire with water to make gasket removal and installation easier.*

4. Remove the grommet (4) from the old spark plug wire. Clean the grommet and place it on the new spark plug wire (5).
5. Install the protector tube onto the new wire.
6. Slide the gasket onto the end of the new spark plug wire.
7. Install the cap on the new coil spark plug wire by rotating it clockwise three or four revolutions while applying light pressure on the cap.
8. Install the gasket (1) on the cap (2).
9. Position the ignition coil (7) onto the cast mounting bosses on the engine crankcase and tighten the two mounting bolts (6) to finger tight at this time.
10. Rotate the flywheel (8) until the magnet is positioned directly under the ignition coil. Use a 0.012-inch (0.304 mm) bronze feeler gauge to set the air gap between the ignition coil and the flywheel magnet. Tighten the two mounting bolts (6) to 30 in-lb (3.4 N·m) **(Figure 13-44, Page 13-39)**.

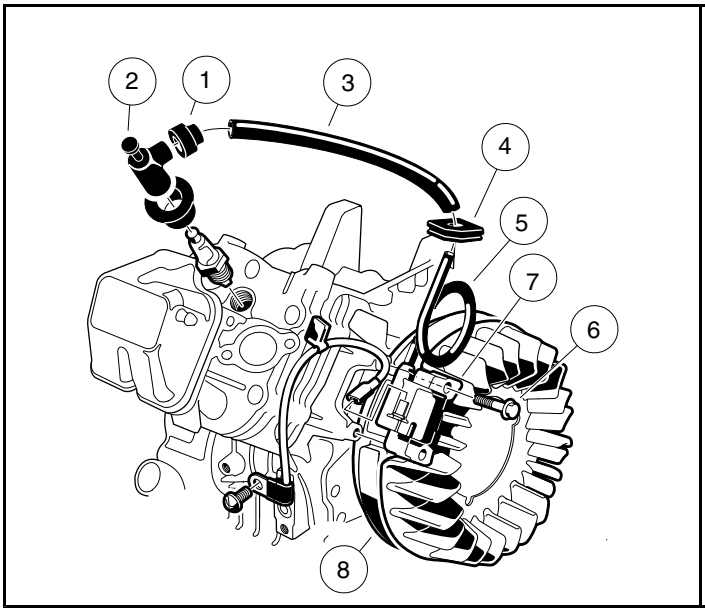

511

Figure 13-43 Coil Installation

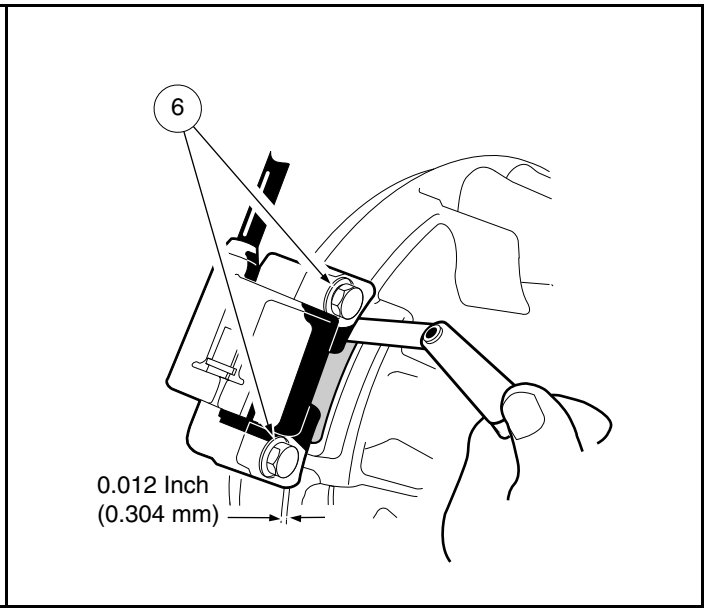

512

Figure 13-44 Set Air Gap

11. Connect the 18-gauge black wire to the spade terminal on the coil.
12. Position the fan housing close to the engine crankcase and slide the plug wire grommet into the notch on the housing.

13. When installing fan housing, make sure the top front corner of the housing is above the upper cylinder shroud. The front edge of the fan housing should be behind the lower cylinder shroud. Align the slots in the housing with the flanged bolts loosened earlier.
14. Install the four remaining flange bolts that secure the fan housing to the engine crankcase. Tighten all seven mounting bolts to 90 in-lb (10.2 N·m) **(Figure 13-41, Page 13-38)**.
15. Install the stiffener with four hex-head bolts and lock nuts. Tighten the hardware to 23 ft-lb (30.5 N·m) **(Figure 13-40, Page 13-38)**.
16. Install the fan shroud with four pan-head bolts (5). Tighten to 50 in-lb (5.7 N·m) **(Figure 13-41, Page 13-38)**.
17. Secure the wire harness to the stiffener with a wire tie. Place the wire tie through the lower hole at the back of the stiffener **(Figure 13-40, Page 13-38)**.

CAUTION

- **Make sure wire harness is routed and secured away from the muffler.**

18. Install the muffler. **See Muffler Installation on page 17-1.**
19. Place the governor guard (1) onto the throttle bracket and the 2-ended bolt. Install the two Torx screws (4) through the governor guard into the throttle bracket and tighten to 15 in-lb (1.7 N·m). Place the 3/8 flat washer (3) onto the 2-ended bolt and secure with nylon lock nut (2). Tighten the nut to 50 in-lb (5.7 N·m) **(Figure 13-39, Page 13-38)**.
20. Connect battery and spark plug wire(s). **See Connecting the Battery – Gasoline Vehicles on page 1-3.**

OIL LEVEL SENSOR

See General Warnings on page 1-1.

TESTING THE OIL LEVEL SENSOR

See Test Procedure 21 – Oil Level Sensor on page 12-34.

OIL LEVEL SENSOR REMOVAL

See Oil Level Sensor Removal on page 15-6.

OIL LEVEL SENSOR INSTALLATION

See Oil Level Sensor Installation on page 15-6.

BATTERY

See General Warnings on page 1-1.

⚠ DANGER

- **Due to the danger of an exploding battery, wear a full face shield and rubber gloves when working around a battery.**
- **Battery – Explosive gases! Do not smoke. Keep sparks and flames away from the vehicle and service area. Ventilate when charging or operating vehicle in an enclosed area. Wear a full face shield and rubber gloves when working on or near batteries.**
- **Battery – Poison! Contains acid! Causes severe burns. Avoid contact with skin, eyes, or clothing. Antidotes:**
  - **External: Flush with water. Call a physician immediately.**
  - **Internal: Drink large quantities of milk or water. Follow with milk of magnesia or vegetable oil. Call a physician immediately.**
  - **Eyes: Flush with water for 15 minutes. Call a physician immediately.**

GENERAL INFORMATION

Club Car gasoline vehicles are equipped with 12-volt, low-maintenance batteries. When changing a 12-volt battery in any Club Car gasoline-powered vehicle, the same size battery with adequate amperage ratings should be used as a replacement.
Club Car recommends a group 70, side-post battery (P/N 1012328), with a 650 cranking amp rating at 32 °F (0 °C) (500 CCA at 0 °F (-17.8 °C)) and a reserve capacity of at least 105 minutes. The group 70 classification indicates battery size: 8-1/4 inches W x 6-1/2 inches D x 7-1/4 inches H (21.0 cm W x 16.5cm D x 18.4 cm H). It is important to use the proper size to ensure that the battery clamp will fit correctly.

Testing the Battery

See Test Procedure 1 – Battery on page 12-12.

PREVENTIVE MAINTENANCE

To keep the battery in good operating condition, follow these steps on a regular basis.

1. Any corrosion build-up on or around the battery should be removed immediately. Post connections should be clean and tight. Any frayed or worn wires should be replaced. After all cables have been connected and properly tightened to 20 ft-lb (27.1 N·m), coat terminals with Battery Terminal Protector Spray (P/N 1014305) to prevent future corrosion.
2. The battery should be kept clean and dry to minimize self-discharge. Any dirt, grime or acid spillage should be removed. Wash the battery with a bristle brush using water and bicarbonate of soda (1 cup (237 mL) baking soda per 1 gallon (3.8 L) of water). Rinse with water. Do not allow solution to enter battery through the vent cap holes. **See Self-Discharge on page 13-42.**
3. Maintain proper water level. **See Water Level on page 13-42.**
4. Check battery periodically to see that it is in a full state of charge. **See Charging the Battery on page 13-43.**
5. Keep battery hold-down clamp tight. **See Vibration Damage on page 13-42.**

SELF-DISCHARGE

Dirt and battery acid can provide a path for a small current draw that slowly discharges the battery. To minimize self-discharge, the battery should always be kept clean.
Hot weather also has an effect on a battery's self-discharge rate. The higher the temperature, the quicker a battery will discharge. In hotter climates the battery should be checked more often. When storing the battery, keep in a cool place. **See Battery Storage on page 13-44.**

WATER LEVEL

The water level should be checked semi-annually to be sure water is at the proper level **(Figure 13-45, Page 13-42)**. Never allow the water level to fall below the tops of the plates because this will cause the exposed part of the plate to become permanently inactive. Check the water level more frequently in hot weather or when the battery becomes old.

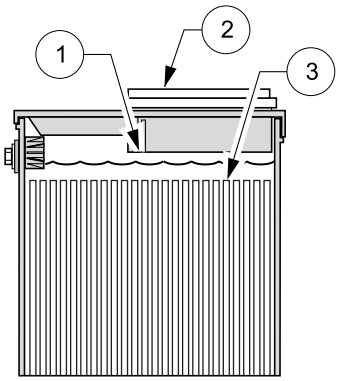

1. Level Indicator 2. Cap 3. Plates
Electrolyte level at least 1/2 inch (13 MM) above plates or to level indicator.

22

Figure 13-45 Battery Water Level

VIBRATION DAMAGE

The battery hold-down clamp should always be tight enough to keep the battery from bouncing. Battery life may be severely shortened if the clamp is too loose. Excessive vibration shortens the life of the battery. It may also cause acid to leak out of the vent caps and corrosion to build up on surrounding metal parts. The acid which is lost reduces the capacity of the battery and cannot be replaced.

MINERAL CONTENT

For the longest battery life, distilled water should be used in the battery; however, if tap water is going to be used, contact your local water department to be sure mineral contents are below the levels listed in the following table. **See following NOTE.**

NOTE: *Contact your local water department for mineral content analysis.*

IMPURITY	ALLOWABLE CONTENT (PARTS PER MILLION)
Suspended matter	Trace

TABLE CONTINUED ON NEXT PAGE

IMPURITY	ALLOWABLE CONTENT (PARTS PER MILLION)
Total solids	100.0
Calcium and Magnesium Oxides	40.0
Iron	5.0
Ammonia	8.0
Organic matter	50.0
Nitrates	10.0
Nitrites	5.0
Chloride	5.0

BATTERY REMOVAL

See General Warnings on page 1-1. See also DANGER on page 13-40.

1. Disconnect battery. **See Disconnecting the Battery – Gasoline Vehicles on page 1-3.**
2. Remove the battery hold-down clamp from the battery.
3. Lift the battery from the vehicle. **See following WARNING.**

⚠ WARNING

- **Keep the battery in an upright position to prevent electrolyte leakage. Tipping the battery beyond a 45° angle in any direction can allow a small amount of electrolyte to leak out of the vent hole. Do not exceed this 45° angle when lifting, carrying or installing battery. The battery acid could cause severe personal injury when accidentally coming in contact with the skin or eyes, and could damage clothing.**

CHARGING THE BATTERY

See General Warnings on page 1-1. See also DANGER on page 13-40.

1. Charge the battery using an automotive type 12-volt battery charger. Follow all warnings and procedures supplied by the battery charger manufacturer.
2. Attach the positive (+) charger cable to the positive (+) battery post.
3. Attach the negative (–) charger cable to the negative (–) battery post.
4. The battery may be charged with a slow charge (3-10 amps) or a fast charge (20-30 amps). Charge until the specific gravity reaches 1.250. **See following WARNING.**

⚠ WARNING

- **If the battery case feels hot (approximately 125 °F (52 °C) or more), emits gases, or fluid boils from vents, stop charging immediately. Failure to stop charging battery when any of these conditions are present could result in an explosion, personal injury and/or damage to the battery.**
- **Do not disconnect the DC leads and battery when the charger is on. The resulting arcing between the DC leads and battery post could cause an explosion.**
- **If the charger must be stopped, disconnect the AC supply cord from the wall outlet before disconnecting the DC leads from the battery. Allow the battery to cool to room temperature and resume charging battery at a lower amp rate.**

BATTERY INSTALLATION

See General Warnings on page 1-1. See also DANGER on page 13-40.

1. Place the battery into the vehicle. Make sure the battery posts are facing the engine.
2. Secure the battery to the vehicle with the clamp. Install two screws and tighten to 31 in-lb (3.5 N·m).
3. Connect battery. **See Connecting the Battery – Gasoline Vehicles on page 1-3.**

BATTERY STORAGE

See General Warnings on page 1-1. See also DANGER on page 13-40.

1. Keep the battery clean and free of corrosion. **See Preventive Maintenance on page 13-41.**
2. The battery cables should be disconnected from the battery so the battery can be connected to the charger. The battery can be left in the vehicle.
3. Fully charge the battery prior to storage.
4. Store in a cool area. The colder the area in which the battery is stored, the less the battery will self-discharge. A battery stored at 0 °F (-17.8 °C) will discharge very little over a four-month period. A battery stored at 80 °F (27 °C) will have to be recharged every few weeks.
5. Check the state of charge periodically. A battery that is discharged and left in a cold environment can freeze and crack. If the specific gravity drops below 1.220, the battery should be recharged. **See following WARNING.**

⚠ WARNING

- **If the battery is frozen or the container is bulged, discard battery. A frozen battery can explode.**

6. The frequency of recharging required depends on the temperature of the storage area, but it is recommended that the battery be monitored for state of charge every month. Also, if the storage area is unheated in a cold climate and recharging is required, it is recommended that the area be heated to at least 60 °F (16 °C) prior to charging. The battery will not charge effectively in cold temperatures for the same reasons that it does not discharge as rapidly in cold temperatures.

CHARGING A DEAD BATTERY

See General Warnings on page 1-1. See also DANGER on page 13-40.
The vehicle is equipped with a starter/generator. The generator is not designed to charge a dead battery. If the vehicle battery has become discharged, it must be charged using a properly rated automotive type charger.

⚠ WARNING

- **Do not jump-start a dead battery using another battery and jumper cables.**

GROUND CABLES

See General Warnings on page 1-1.

TESTING THE GROUND CABLES

See Test Procedure 3 – Ground Cables on page 12-15.

⚠ DANGER

- **See General Warnings on page 1-1.**

⚠ WARNING

- **See General Warnings on page 1-1.**

GENERAL INFORMATION

See General Warnings on page 1-1.

This gasoline vehicle is powered by a 4-cycle, overhead valve, single cylinder, air-cooled engine. The 4-cycle engine has an oil reservoir (crankcase) similar to automobiles, trucks, aircraft, heavy equipment, machinery and other applications designed for reliable heavy-duty service. The engine has two major component assemblies: the cylinder assembly and the crankcase assembly. **See following NOTE.**

NOTE: *Engine rotation is clockwise as viewed from the clutch side of the engine.*

This section contains information for removing and replacing the engine. For complete instruction on engine disassembly, repair, rebuilding, and reassembly, see your authorized dealer.

BEFORE SERVICING

Carefully read the applicable information and instructions before beginning engine service. Diagrams, DANGER, WARNING, CAUTION and NOTE statements and detailed descriptions have been included wherever necessary. Anyone attempting engine service should have knowledge and experience in small engine service and repair.

ENGINE ROTATION

When turning the crankshaft by hand, always turn it clockwise as viewed from the clutch side of the engine. This will ensure proper adjustments.

SPARK PLUG

Spark plugs are selected to suit specific engine design and vehicle operating conditions. The spark plug (P/N AM 1232301) is designed to give maximum life and efficient combustion of fuel. The spark gap should be set to 0.027-0.031 inches (0.69-0.79 mm).

Spark Plug Removal

See General Warnings on page 1-1.

⚠ CAUTION

- **Before removal and disassembly, clean the engine.**

Remove all dirt from plug base in the cylinder head before removing plug. Use a 13/16-inch deep well socket wrench or 13/16-inch spark plug wrench to loosen the plug.

Spark Plug Cleaning, Inspection and Repair

Examine the plug **(Figure 14-1, Page 14-2)**. The deposits on the plug base and electrode are an indication of the correct heat range and efficiency as well as a guide to the general condition of the engine, fuel and air mixture and ignition system. If all of the above conditions are proper, the spark plug should be a light brown color. There should be no bridging between the electrode and base. The electrode should not be eroded. Black color, excessive carbon, and/or a wet plug indicates that the fuel is too rich. White, burned or melted electrodes indicate the fuel is too lean or pre-igniting. Oily deposits on the plug electrode are an indication of worn rings, valve guides, cylinder wall, etc. Also examine the spark plug wire. Remove rubber boot and inspect internal spring for damage. Inspect spark plug wire for damage and be sure spring coil is securely attached to spark plug. **See following WARNING**.

⚠ WARNING

- **Remove spark plug wire to avoid accidental start up of the engine when servicing vehicle. To avoid ignition of fuel and serious personal injury or death, never try to start the engine with plug removed from engine.**

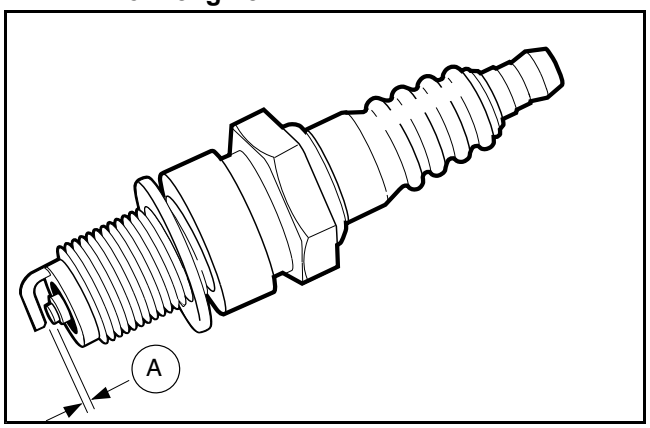

524

Figure 14-1 Spark Plug

Testing the Spark Plug

Check the sparking ability of a cleaned and properly gapped plug on a sparking comparator if possible. Spark should be blue and strong and able to jump a 5/16-inch (8 mm) gap.

Setting the Spark Gap

1. Pass a contact point file between the electrodes to produce flat, parallel surfaces to facilitate accurate gauging.
2. Use a wire type gauge. Bend the outside or ground electrode so only a slight drag on the gauge is felt when passing it between the electrode. Never make an adjustment by bending the center electrode. Set gap (A) to 0.027-0.031 inches (0.69-0.79 mm) **(Figure 14-1, Page 14-2)**.

Spark Plug Installation

NOTE: *Before installing the plug, check the condition of the threads in the cylinder head. Soften deposits in cylinder head threads with penetrating oil and clean the threads with a tap if necessary.*

Use a high temperature, anti-seize lubricant on the threads of the spark plug to reduce friction when installing a new plug, and reduce "gauling" and thread seizing for future replacements.

1. Install the spark plug by threading it in until finger tight.
2. tighten the spark plug to 20 ft-lb (27 N·m).

CYLINDER HEAD

See General Warnings on page 1-1.

GENERAL INFORMATION

Test cylinder compression using a standard compression tester. Low compression would normally indicate a problem in the cylinder assembly such as defective rings, gaskets, etc. At a cranking speed of 550-600 RPM, the compression should be 156-185 psi. **See Engines and Transaxles Manual for inspection and repair.**

BREATHER VALVE (REED VALVE)

General Information

The function of the breather is to create a vacuum in the crankcase which prevents oil from being forced out of the engine through the piston rings, oil seals or gaskets. The breather has a reed valve which limits the direction of air flow caused by the piston moving up and down. Air can flow out of the crankcase, but the one-way reed valve blocks return flow and therefore maintains a vacuum in the crankcase.

Oil laden air in the crankcase passes through the reed valve and expands into the rocker chamber. In the rocker chamber most oil separates from the air and drains back to the crankcase. The air passes through a tube and vents to the intake manifold. **See Engines and Transaxles Manual for inspection and repair.**

CRANKCASE

See General Warnings on page 1-1.

ENGINE REMOVAL

To perform repairs on crankcase components, remove engine from the vehicle. **See following CAUTION.**

⚠ CAUTION

- **Before removal and disassembly, clean the engine.**

1. Remove the powertrain. **See Unitized Transaxle Removal on page 18-8.See following NOTE.**

NOTE: *The crankshaft has left-hand threads at the clutch mounting hole.*

2. Remove starter/generator. **See Starter/Generator Removal on page 13-1.**
3. Remove drive clutch. **See Drive Clutch Removal on page 19-4 and following NOTE.**
4. Remove muffler. **See Muffler Removal on page 17-1.**
5. Remove engine mounting hardware (items 1, 2, 5 and 6) **(Figure 14-4, Page 14-5)**.
6. Lift engine from the mounting plate.
7. Remove crankcase oil drain plug and filler tube. Tip the engine slightly to allow all of the oil to drain from the crankcase. Dispose of engine oil properly.

CRANKCASE COVER REMOVAL

1. Remove yellow jumper wire (11) from cord connector (12) **(Figure 14-2, Page 14-4)**.
2. Remove nuts and clamps at two-ended bolts (1 and 2) **(Figure 14-3, Page 14-4)**.
3. Remove eight bolts (3) and remove the crankcase cover (4). **See following NOTE**.

NOTE: *If the crankcase cover sticks, tap lightly with a plastic mallet on alternate sides near the dowel pins (5)* ***(Figure 14-3, Page 14-4)****.*

4. Remove the crankcase cover gasket completely. It may stick to the flanged surface of the crankcase.

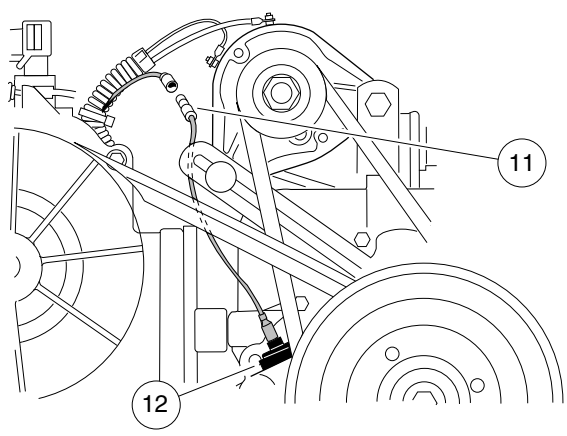

526

Figure 14-2 Oil Level Sensor Wire

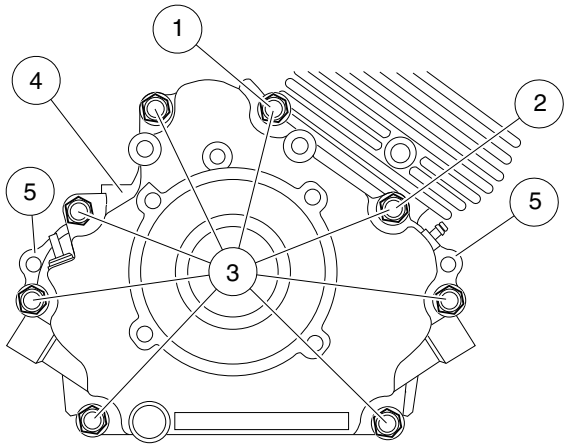

527

Figure 14-3 Crankcase Cover

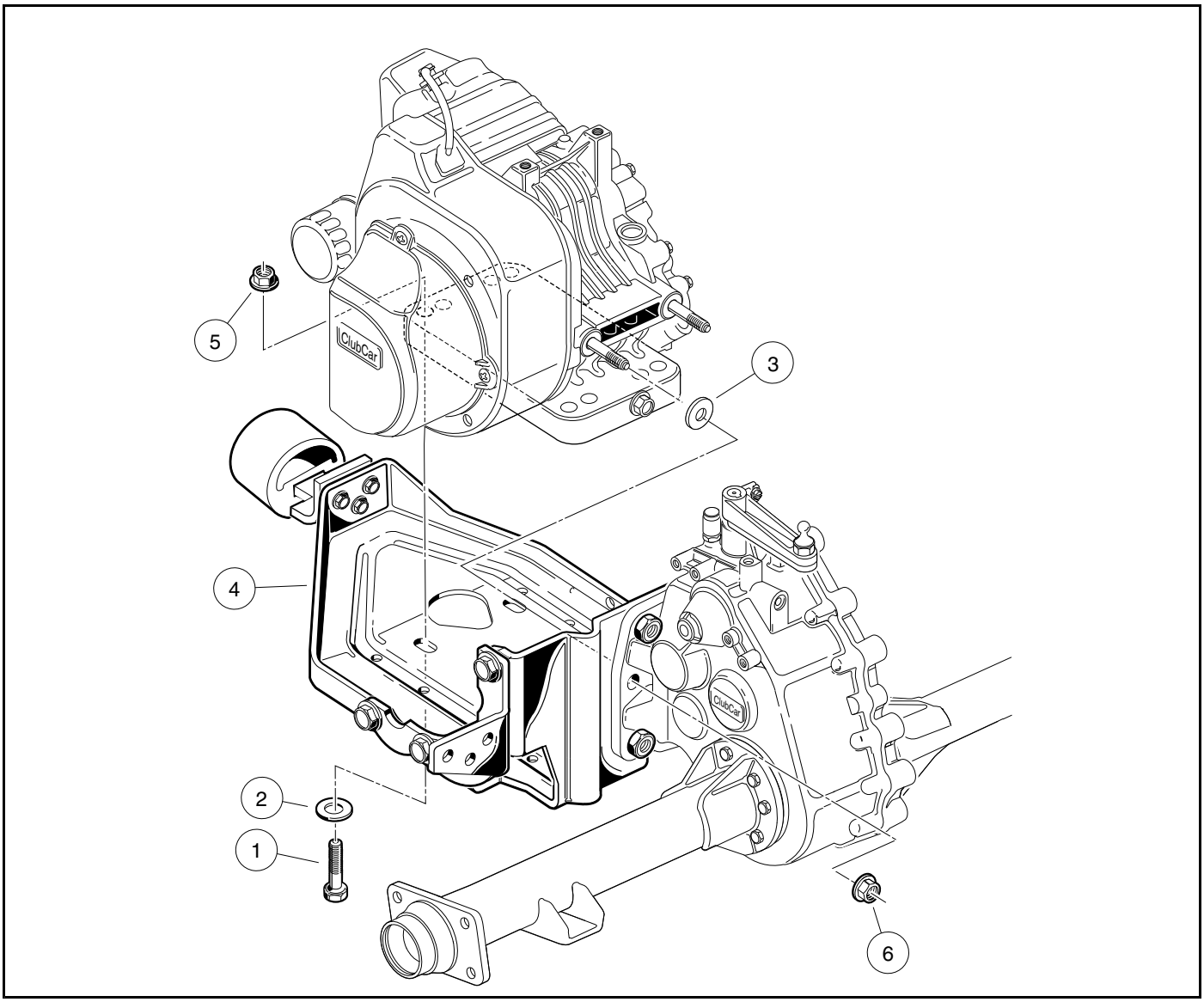

525

Figure 14-4 Engine Mounting Plate

OIL LEVEL SENSOR

Testing the Oil Level Sensor

See Test Procedure 21 – Oil Level Sensor on page 11-34

Oil Level Sensor Removal

1. If not already removed, remove crankcase cover. **See Crankcase Cover Removal on page 14-4.**
2. Disconnect the oil level sensor wire (2) from the cord connection (1) **(Figure 14-2, Page 14-4)**.
3. Remove the screw (3) from the wire clamp (4).
4. Remove the two mounting screws from the inside of the crankcase cover and remove the oil level sensor and bracket.
5. If necessary, remove the three screws (7) that hold the sensor to the bracket (5).

Oil Level Sensor Installation

1. If the oil level sensor was removed from the bracket, install sensor (6) into bracket (5) and secure with three screws (7) **(Figure 14-5, Page 14-6)**. Tighten to 17 in-lb (1.9 N·m).

2. Position the sensor and bracket on inside of crankcase and install two mounting screws.
3. Connect sensor wire (2) to cord connector (1) **(Figure 14-5, Page 14-6)**.
4. Install screw (3) through wire clamp and into crankcase cover. Tighten to 30 in-lb (3.4 N·m).

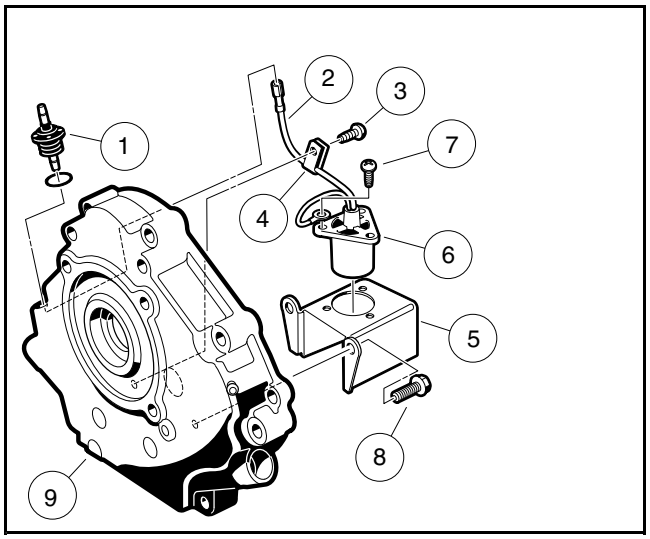

528

Figure 14-5 Oil Level Sensor

CRANKCASE COVER INSTALLATION

⚠ CAUTION

- **Before assembly, make sure parts are clean.**
- **Do not reuse the gasket. Install a new one.**
- **Install and tighten crankcase cover bolts as instructed. Failure to do so could cause the cover to become warped.**

1. Clean the gasket surfaces on the crankcase cover to fit a new gasket during installation and inspect the oil seal for wear and damage.
2. Install crankcase cover. Using HANDS ONLY, seat cover completely against the crankcase. If the cover will not seat, the camshaft is not installed correctly.
3. Install and finger tighten evenly the eight cover mounting bolts **(Figure 14-6, Page 14-7)**.
4. Tighten the cover mounting bolts in two steps. First, in the sequence shown, tighten all eight bolts to approximately 130 in-lb (14 N·m). Then, repeating the sequence, tighten them to 250 in-lb (28.2 N·m) **(Figure 14-6, Page 14-7)**.
5. Connect the yellow jumper wire (11) to the cord connector (12) **(Figure 14-2, Page 14-4)**.

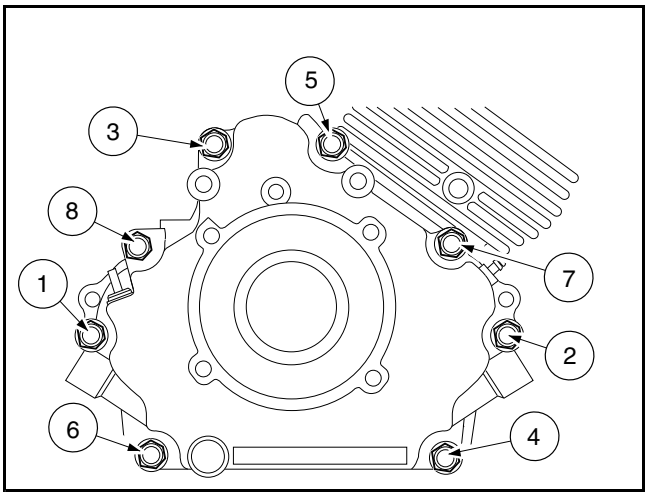

530

Figure 14-6 Crankcase Cover Installation

IGNITION COIL AND FLYWHEEL

See General Warnings on page 1-1.

IGNITION COIL AND FLYWHEEL REMOVAL

1. Loosen three screws (2) and remove the remaining four screws (1) attaching the flywheel housing as shown, then remove the housing **(Figure 14-7, Page 14-7)**.
2. Disconnect the ignition coil (11) from its primary lead wire at the connector (12). Remove the two bolts (10) and take out the ignition coil **(Figure 14-8, Page 14-7)**.

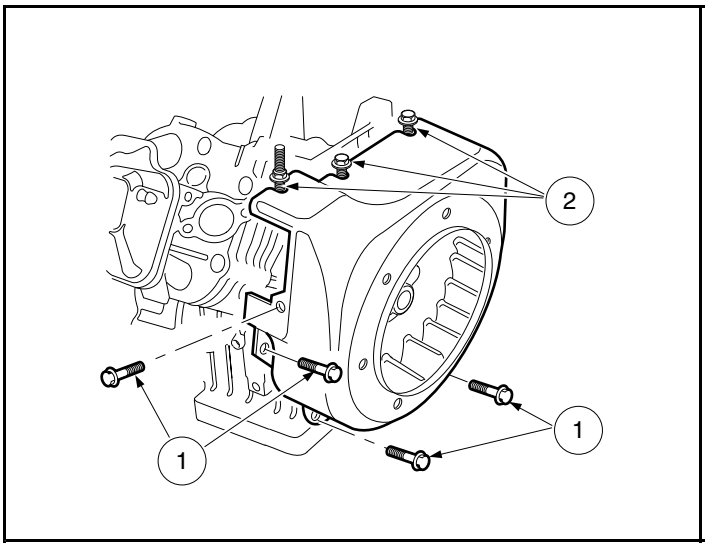

531

Figure 14-7 Flywheel Housing

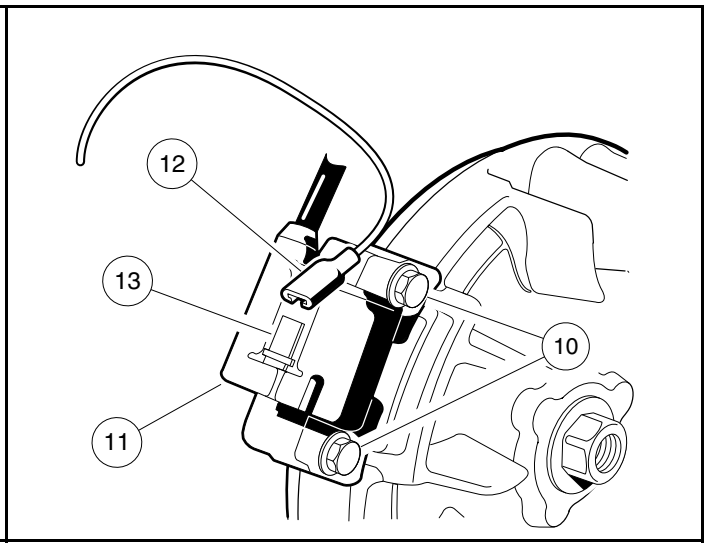

510

Figure 14-8 Ignition Coil

3. Hold the flywheel (4), not the fan (7), with a strap wrench (5) and, using a 25 mm socket, remove the flywheel nut (and flat washer) by turning it counterclockwise **(Figure 14-9, Page 14-8)**. **See following CAUTION.**

⚠ CAUTION

- **The flywheel nut has right-hand threads. Turn it clockwise to tighten, or counterclockwise to loosen.**
- **Do not damage the fan blades with the strap wrench. Do not place screwdriver or pry bar in the fan blades.**

4. Remove the flywheel with a puller (P/N 1016627).
5. Remove the flywheel key from its groove.

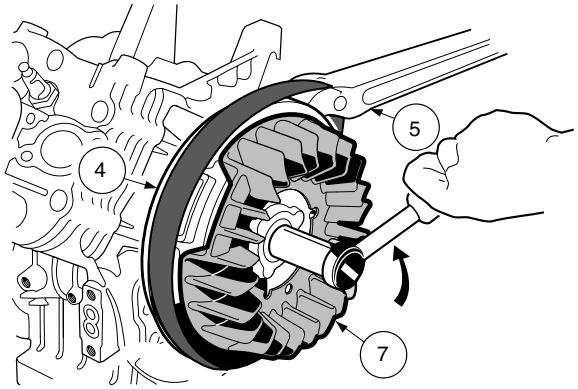

532

Figure 14-9 Flywheel Nut

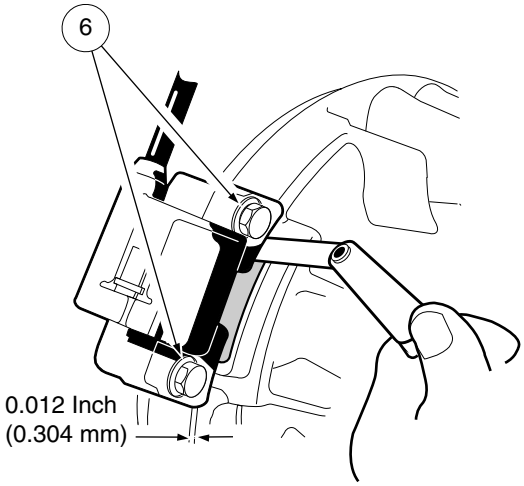

512

Figure 14-10 Adjust Ignition Coil Air Gap

FLYWHEEL INSTALLATION

1. Insert the flywheel key into the keyway in the crankshaft. Then align the keyway in the flywheel to the key and push the flywheel and fan assembly onto the crankshaft until it seats. Install flat washer and nut finger tight.
2. Use a strap wrench (3) to keep the flywheel and fan assembly (1) from turning while tightening the flywheel nut to 63 ft-lb (85.4 N·m) **(Figure 14-11, Page 14-9)**. **See following CAUTION.**

⚠ CAUTION

- **The flywheel nut has right-hand threads. Turn it clockwise to tighten, or counterclockwise to loosen.**
- **Be careful not to damage the fan blades. Use a strap wrench to hold flywheel. Do not place screwdriver or pry bar between fan blades.**

3. Install the fan housing and tighten the screws to 90 in-lbs (10 N·m).

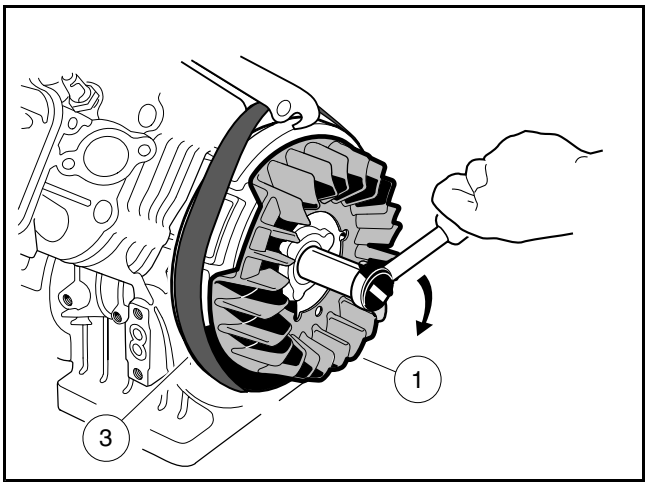

533
Figure 14-11 Fan and Flywheel Installation

IGNITION COIL INSPECTION AND REPAIR

See Section 12 – Troubleshooting and Electrical System – TPS.

IGNITION COIL INSTALLATION

1. Installation is the reverse of removal.
2. While tightening the two bolts (6), use a bronze feeler gauge to adjust the ignition coil air gap to 0.012 inch (0.304 mm) **(Figure 14-10, Page 14-8)**.
3. Tighten the two ignition coil bolts to 30 in-lb (3.4 N·m).

CRANKCASE COVER INSTALLATION

See Crankcase Cover Installation on page 14-6.

ENGINE INSTALLATION

See General Warnings on page 1-1.

1. Place engine onto engine mounting plate and tighten the mounting hardware (1, 2 and 5) to 13 ft-lb (17.7 N·m). Tighten nuts (6) to 17 ft-lb (23.1 N·m) **(Figure 14-4, Page 14-5)**.
2. Install drive clutch. **See Drive Clutch Installation on page 19-12.**
3. Install drive belt. **See Drive Belt Installation on page 19-3.**
4. Install muffler. **See Muffler Installation on page 17-1.**
5. Install starter/generator and belt. **See Starter/Generator Installation on page 13-11.**
6. Install the powertrain. **See Unitized Transaxle Installation on page 18-16.**
7. Install oil drain plug in the crankcase and tighten to 20 ft-lb (27.1 N·m). Apply a light film of oil on the seal of a new oil filter and install the filter on the crankcase. Fill the crankcase to the proper level with the correct

type of oil. This engine should be regarded as a new engine for next scheduled oil change. See Section 10 – Periodic Maintenance.

8. Check all hardware for proper torque/tightness.
9. Check engine oil level **(Figure 14-12, Page 14-10)**.
   9.1. With vehicle on level surface, remove dip stick and clean with cloth **(Figure 14-12, Page 14-10)**.
   9.2. Reinsert dip stick until fully seated.
   9.3. Oil must be in the SAFE LEVEL range.

⚠ CAUTION

- **Do not overfill with oil.**

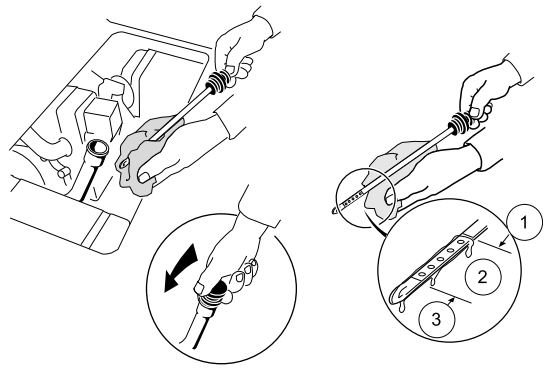

1.Full level 2. Safe level 3. Low level.

23

Figure 14-12 Check Engine Oil Level

10. Install a new or cleaned spark plug, gapped to 0.027-0.031 inch (0.69-0.79 mm), and connect plug wire to plug.
11. Connect battery. **See Connecting the Battery – Gasoline Vehicles on page 1-3.**
12. Adjust the engine RPM setting. **See Engine RPM Adjustment on page 16-8.**
13. Test-drive vehicle to ensure all systems are functional and correctly adjusted.

TORQUE SPECIFICATIONS

ITEM	SIZE	LIMITS
Cylinder head bolts	M8	220 in-lb (24 N·m)
Valve clearance adjustment nuts	M5	90 in-lb (10 N·m)
Connecting rod bolts (coat threads with engine oil)	M7	180 in-lb (20 N·m)
Flywheel retaining nut	M18	100 ft-lb (135 N·m)
Crankcase cover to block bolts	M8	22 ft-lb (31 N·m)
Starter/Generator bracket to block bolts	M8	200 in-lb (23 N·m)
Oil drain plug	M14	20 ft-lb (27.1 N·m)
Fan housing screws	M6	90 in-lb (10 N·m)
Fan shroud screws	M6	25 in-lb (2.8 N·m)
Bolts marked with “4” (when used with nuts)	M8 M6 M5	130 in-lb (15 N·m) 50 in-lb (5.9 N·m) 30 in-lb (3.4 N·m)

ADJUSTMENTS AND SETTINGS

ITEM	LIMITS
Spark plug gap (standard)	0.027 to 0.031 in. (0.69 to 0.79 mm)
Ignition coil air gap (standard)	0.012 in. (0.304 mm)
Oil pressure (min.) at fast idle speed	45.5 psi (314 kPa)
Oil filter: bypass-valve opening pressure	11.4 to 17.0 psi (78 to 118 kPa)
Compression pressure (min.) (with automatic compression release)	71 psi (483 kPa)
Crankcase vacuum (min.) at governed speed	1.18 in. (30 mm Hg)
Cylinder head-gasket surface flatness (max.)	0.002 in. (0.05 mm)
Valve clearance (exhaust, intake) when engine is cold	0.005 in. (0.127 mm)
Engine RPM	2950 (±30) RPM

⚠ DANGER

- **See General Warnings on page 1-1.**

⚠ WARNING

- **See General Warnings on page 1-1.**

GENERAL INFORMATION

See General Warnings on page 1-1.

This vehicle is powered by a 4-cycle, overhead valve, single cylinder, air-cooled engine. The S26 engine is identified by labelling on the blower housing and has mechanical lifters as opposed to a hydraulically-lifted valve train. The engine has an oil reservoir (crankcase) similar to automobiles, trucks, aircraft, heavy equipment, machinery and other applications designed for reliable heavy-duty service. The engine has two major component assemblies: the cylinder assembly and the crankcase assembly. **See following NOTE.**

NOTE: *Engine rotation is clockwise as viewed from the clutch side of the engine.*

This section contains information for removing and replacing the engine. For complete instruction on engine disassembly, repair, rebuilding, and reassembly, see your authorized dealer.

BEFORE SERVICING

Carefully read the applicable information and instructions before beginning engine service. Diagrams, DANGER, WARNING, CAUTION and NOTE statements and detailed descriptions have been included wherever necessary. Anyone attempting engine service should have knowledge and experience in small engine service and repair.

ENGINE ROTATION

When turning the crankshaft by hand, always turn it clockwise as viewed from the clutch side of the engine. This will ensure proper adjustments.

SPARK PLUG

Spark plugs are selected to suit specific engine design and vehicle operating conditions. The spark plug (P/N AN1232301) is designed to give maximum life and efficient combustion of fuel. The spark gap should be set to 0.027-0.031 inches (0.69-0.79 mm).

Spark Plug Removal

See General Warnings on page 1-1.

⚠ CAUTION

- **Before removal and disassembly, clean the engine.**

Remove all dirt from plug base in the cylinder head before removing plug. Use a 13/16-inch deep well socket wrench or 13/16-inch spark plug wrench to loosen the plug.

Spark Plug Cleaning, Inspection and Repair

Examine the plug **(Figure 15-1, Page 15-2)**. The deposits on the plug base and electrode are an indication of the correct heat range and efficiency as well as a guide to the general condition of the engine, fuel and air mixture and ignition system. If all of the above conditions are proper, the spark plug should be a light brown color. There should be no bridging between the electrode and base. The electrode should not be eroded. Black color, excessive carbon, and/or a wet plug indicates that the fuel is too rich. White, burned or melted electrodes indicate the fuel is too lean or pre-igniting. Oily deposits on the plug electrode are an indication of worn rings, valve guides, cylinder wall, etc. Also examine the spark plug wire. Remove rubber boot and inspect internal spring for damage. Inspect spark plug wire for damage and be sure spring coil is securely attached to spark plug. **See following WARNING**.

⚠ WARNING

- **Remove spark plug wire to avoid accidental start up of the engine when servicing vehicle. To avoid ignition of fuel and serious personal injury or death, never try to start the engine with plug removed from engine.**

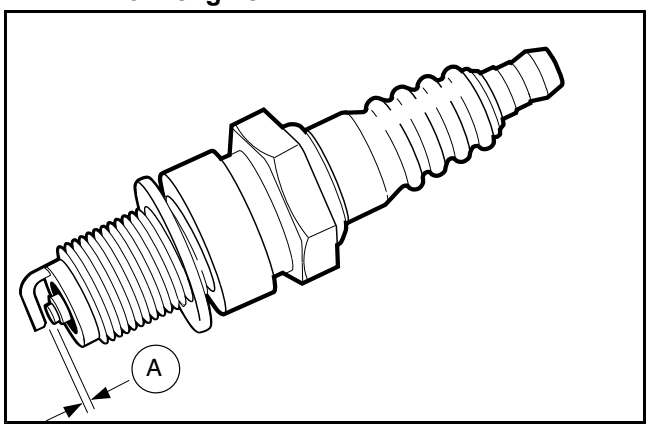

524

Figure 15-1 Spark Plug

Testing the Spark Plug

Check the sparking ability of a cleaned and properly gapped plug on a sparking comparator if possible. Spark should be blue and strong and able to jump a 5/16-inch (8 mm) gap.

Setting the Spark Gap

1. Pass a contact point file between the electrodes to produce flat, parallel surfaces to facilitate accurate gauging.
2. Use a wire type gauge. Bend the outside or ground electrode so only a slight drag on the gauge is felt when passing it between the electrode. Never make an adjustment by bending the center electrode. Set gap (A) to 0.027-0.031 inches (0.69-0.79 mm) **(Figure 15-1, Page 15-2)**.

Spark Plug Installation

NOTE: *Before installing the plug, check the condition of the threads in the cylinder head. Soften deposits in cylinder head threads with penetrating oil and clean the threads with a tap if necessary.*

Use a high temperature, anti-seize lubricant on the threads of the spark plug to reduce friction when installing a new plug, and reduce "gauling" and thread seizing for future replacements.

Install the spark plug by threading it in until finger tight, then tighten the spark plug to 20 ft-lb (27 N·m).

CYLINDER HEAD

See General Warnings on page 1-1.

GENERAL INFORMATION

Test cylinder compression using a standard compression tester. Low compression would normally indicate a problem in the cylinder assembly such as defective rings, gaskets, etc. At a cranking speed of 550-600 RPM, the compression should be 156-185 psi. **See Engines and Transaxles Manual for inspection and repair.**

BREATHER VALVE (REED VALVE)

General Information

The function of the breather is to create a vacuum in the crankcase which prevents oil from being forced out of the engine through the piston rings, oil seals or gaskets. The breather has a reed valve which limits the direction of air flow caused by the piston moving up and down. Air can flow out of the crankcase, but the one-way reed valve blocks return flow and therefore maintains a vacuum in the crankcase.

Oil laden air in the crankcase passes through the reed valve and expands into the rocker chamber. In the rocker chamber most oil separates from the air and drains back to the crankcase. The air passes through a tube and vents to the intake manifold. **See Engines and Transaxles Manual for inspection and repair.**

VALVE CLEARANCE CHECK AND ADJUSTMENT

1. Check and adjust clearance when the engine is cold.
2. Turn the crankshaft until the piston is at the top of the compression stroke.
3. Using a feeler gauge (1), measure the clearance (2) between the adjuster screw (3) and the top of the valve stem (4) **(Figure 15-2, Page 15-4 and Figure 15-3, Page 15-4)**
4. If necessary, loosen the lock nut (3) and turn the adjuster (6) up or down to adjust the clearance to 0.005 inch (0.127 mm) for both intake and exhaust **(Figure 15-2, Page 15-4)**
5. While keeping the adjuster from turning with the screw holder (5) (P/N 1016413), tighten the lock nut (3) to 90 in-lb (10 N·m).
6. Recheck the clearance on both valves.

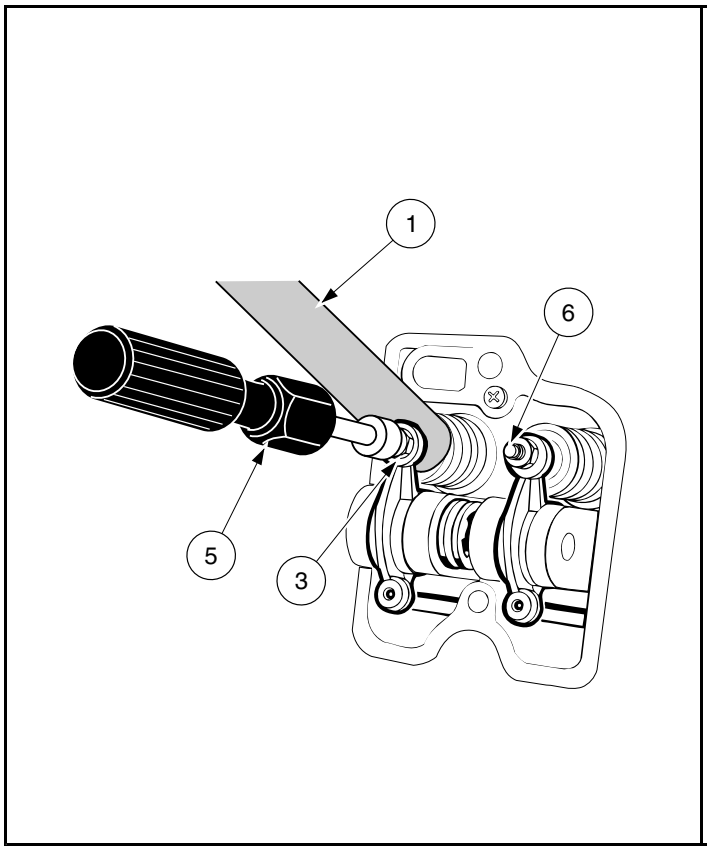

1302

Figure 15-2 Measure Valve Clearance

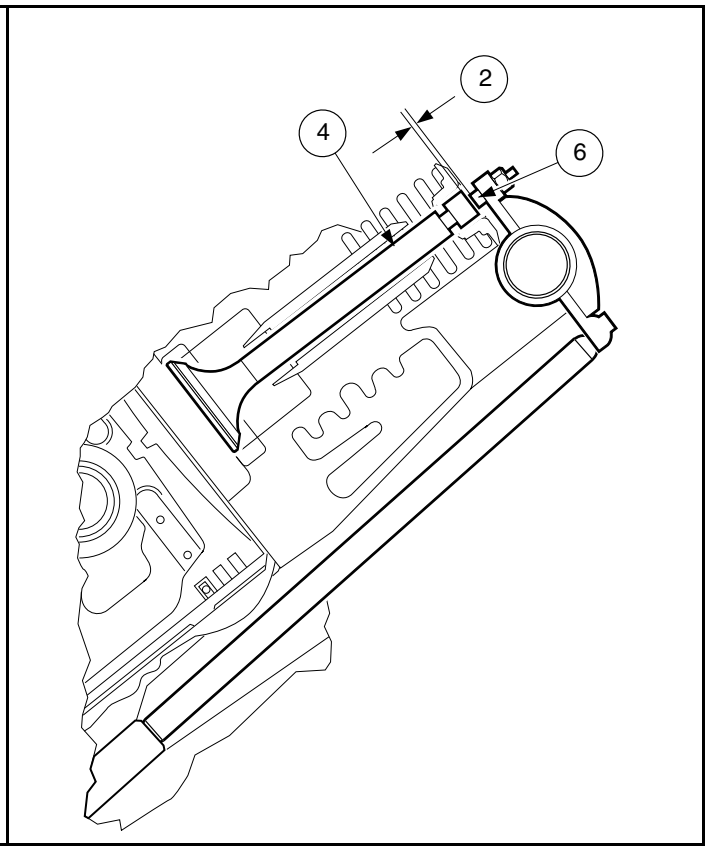

1304

Figure 15-3 Valve Clearance

CRANKCASE

See General Warnings on page 1-1.

ENGINE REMOVAL

To perform repairs on crankcase components, remove engine from the vehicle. **See following CAUTION.**

⚠ CAUTION

- **Before removal and disassembly, clean the engine.**

1. Remove the powertrain. **See Unitized Transaxle Removal on page 18-8.See following NOTE.**

NOTE: *The crankshaft has left-hand threads at the clutch mounting hole.*

2. Remove starter/generator. **See Starter/Generator Removal on page 13-1.**
3. Remove drive clutch. **See Drive Clutch Removal on page 19-4 and preceding NOTE.**
4. Remove muffler. **See Muffler Removal on page 17-1.**
5. Remove engine mounting hardware (items 1, 2, 5 and 6) **(Figure 15-6, Page 15-6)**.
6. Lift engine from the mounting plate.

7. Remove crankcase oil drain plug and filler tube. Tip the engine slightly to allow all of the oil to drain from the crankcase. Dispose of engine oil properly.

CRANKCASE COVER REMOVAL

1. Remove yellow jumper wire (11) from cord connector (12) **(Figure 15-4, Page 15-5)**.
2. Remove nuts and clamps at two-ended bolts (1 and 2) **(Figure 15-5, Page 15-5)**.
3. Remove eight bolts (3) and remove the crankcase cover (4). **See following NOTE.**

NOTE: *If the crankcase cover sticks, tap lightly with a plastic mallet on alternate sides near the dowel pins (5)* ***(Figure 15-5, Page 15-5)****.*

4. Remove the crankcase cover gasket completely. It may stick to the flanged surface of the crankcase.

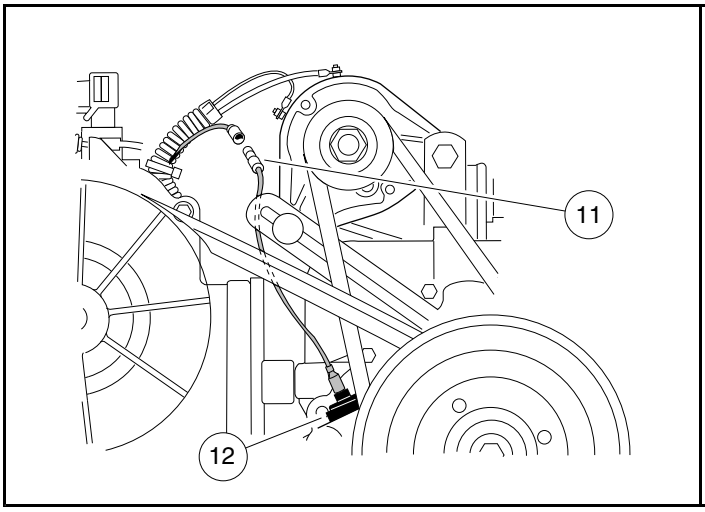

526

Figure 15-4 Oil Level Sensor Wire

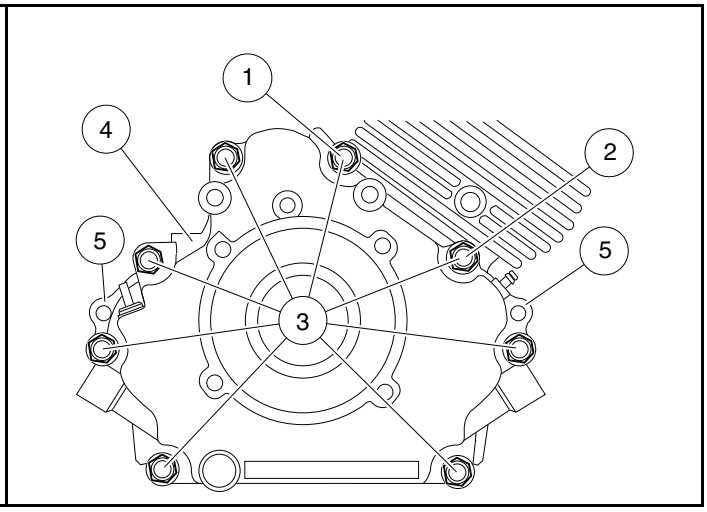

527

Figure 15-5 Crankcase Cover

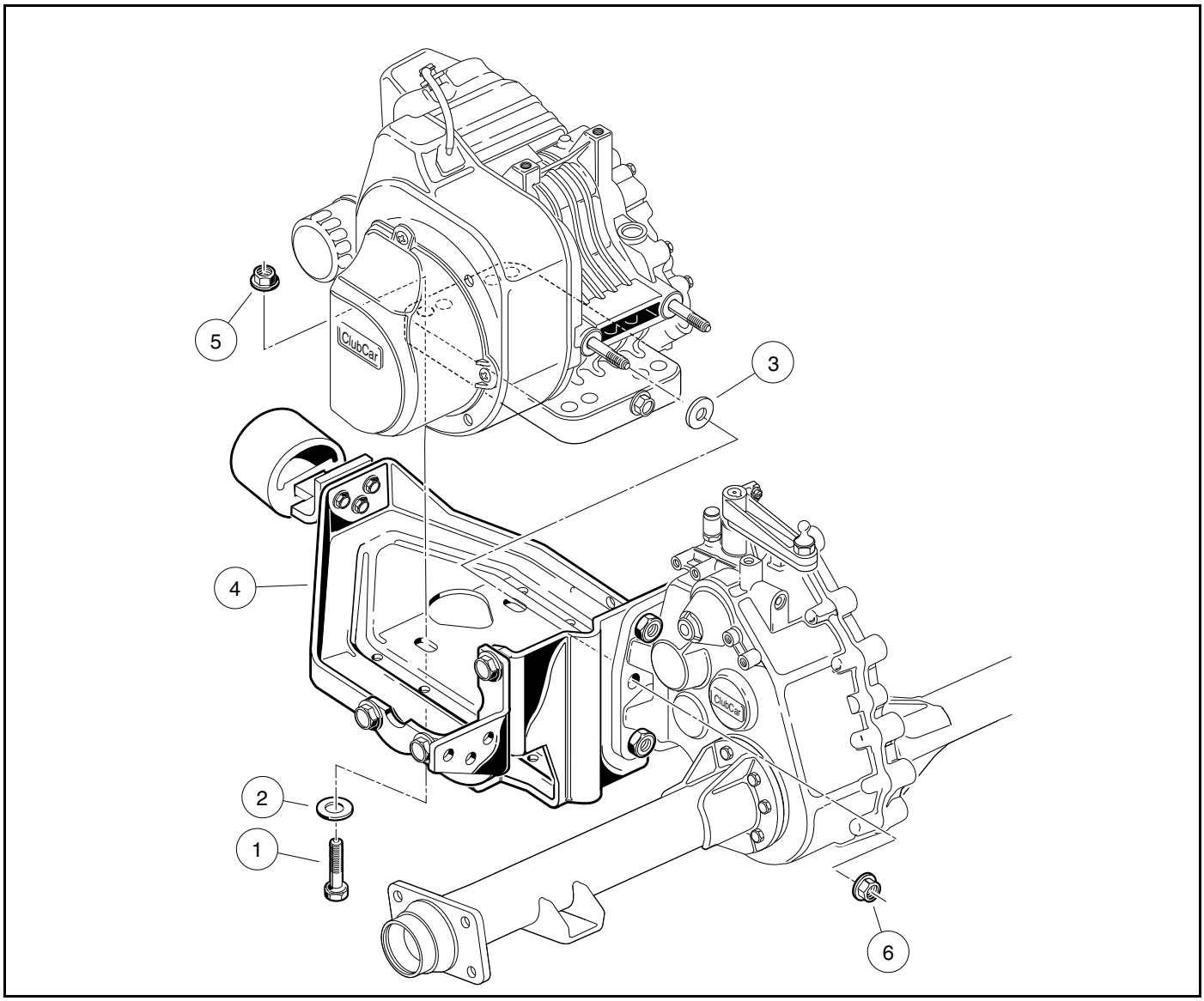

525

Figure 15-6 Engine Mounting Plate

OIL LEVEL SENSOR

Testing the Oil Level Sensor

See See Oil Level Sensor on page 12-34.

Oil Level Sensor Removal

1. If not already removed, remove crankcase cover. **See Crankcase Cover Removal on page 14-4.**
2. Disconnect the oil level sensor wire (2) from the cord connection (1) **(Figure 15-7, Page 15-7)**.
3. Remove the screw (3) from the wire clamp (4).
4. Remove the two mounting screws from the inside of the crankcase cover and remove the oil level sensor and bracket.
5. If necessary, remove the three screws (7) that hold the sensor to the bracket (5).

Oil Level Sensor Installation

1. If the oil level sensor was removed from the bracket, install sensor (6) into bracket (5) and secure with three screws (7) **(Figure 15-7, Page 15-7)**. Tighten to 17 in-lb (1.9 N·m).

2. Position the sensor and bracket on inside of crankcase and install two mounting screws.
3. Connect sensor wire (2) to cord connector (1).
4. Install screw (3) through wire clamp and into crankcase cover. Tighten to 30 in-lb (3.4 N·m).

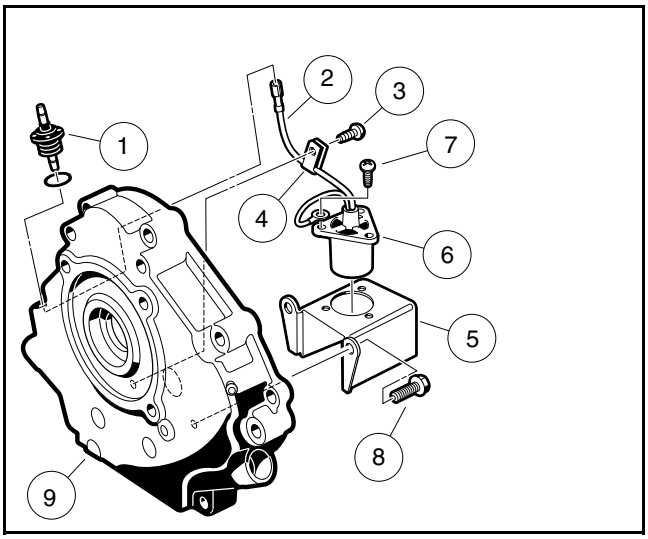

528

Figure 15-7 Oil Level Sensor

CRANKCASE COVER INSTALLATION

⚠ CAUTION

- **Before assembly, make sure parts are clean.**
- **Do not reuse the gasket. Install a new one.**
- **Install and tighten crankcase cover bolts as instructed. Failure to do so could cause the cover to become warped.**

1. Clean the gasket surfaces on the crankcase cover to fit a new gasket during installation and inspect the oil seal for wear and damage.
2. Install crankcase cover. Using HANDS ONLY, seat cover completely against the crankcase. If the cover will not seat, the camshaft is not installed correctly.
3. Install and finger tighten evenly the eight cover mounting bolts.
4. Tighten the cover mounting bolts in two steps. First, in the sequence shown, tighten all eight bolts to approximately 130 in-lb (14 N·m). Then, repeating the sequence, tighten them to 250 in-lb (28.2 N·m) **(Figure 15-8, Page 15-8)**.
5. Connect the yellow jumper wire (11) to the cord connector (12) **(Figure 15-4, Page 15-5)**.

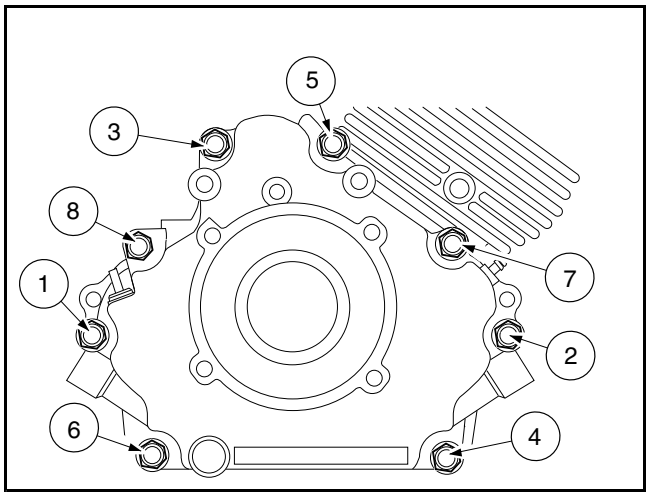

530

Figure 15-8 Crankcase Cover Installation

IGNITION COIL AND FLYWHEEL

See General Warnings on page 1-1.

IGNITION COIL AND FLYWHEEL REMOVAL

1. Loosen three screws (2) and remove the remaining four screws (1) attaching the flywheel housing as shown, then remove the housing **(Figure 15-9, Page 15-8)**.
2. Disconnect the ignition coil (11) from its primary lead wire at the connector (12). Remove the two bolts (10) and take out the ignition coil **(Figure 15-10, Page 15-8)**.

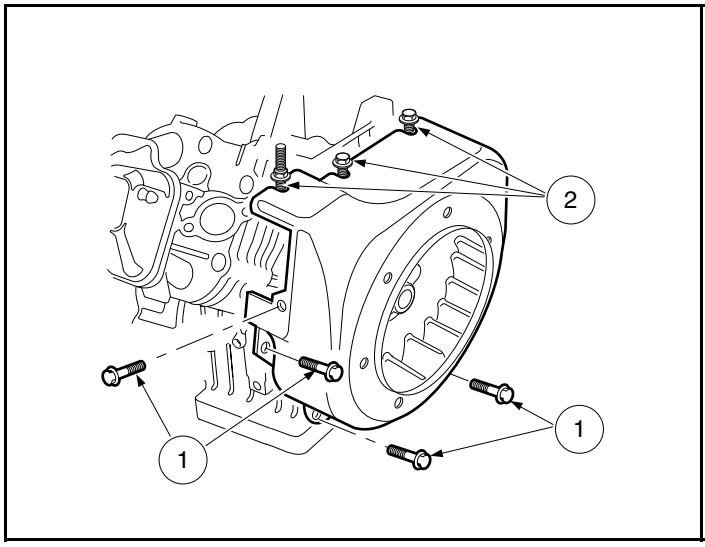

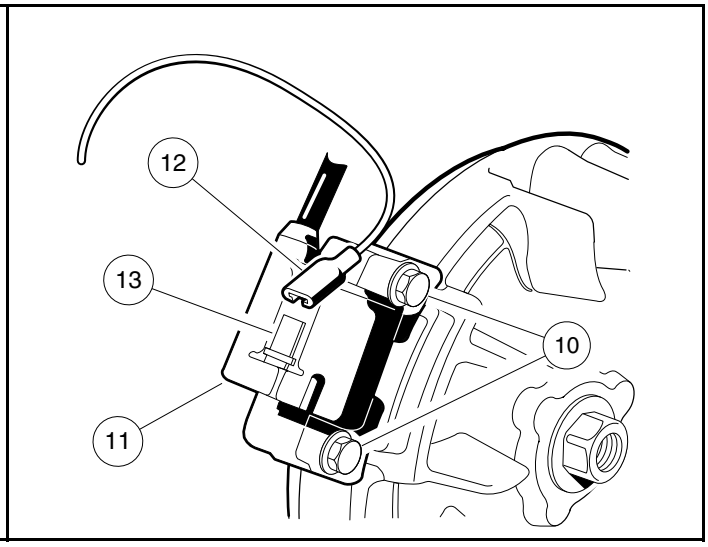

531

Figure 15-9 Flywheel Housing

510

Figure 15-10 Ignition Coil

3. Hold the flywheel (4), not the fan (7), with a strap wrench (5) and, using a 25 mm socket, remove the flywheel nut (and flat washer) by turning it counterclockwise **(Figure 15-11, Page 15-9)**. **See following CAUTION.**

⚠ CAUTION

- **The flywheel nut has right-hand threads. Turn it clockwise to tighten, or counterclockwise to loosen.**
- **Do not damage the fan blades with the strap wrench. Do not place screwdriver or pry bar in the fan blades.**

4. Remove the flywheel with a puller (P/N 1016627).
5. Remove the flywheel key from its groove.

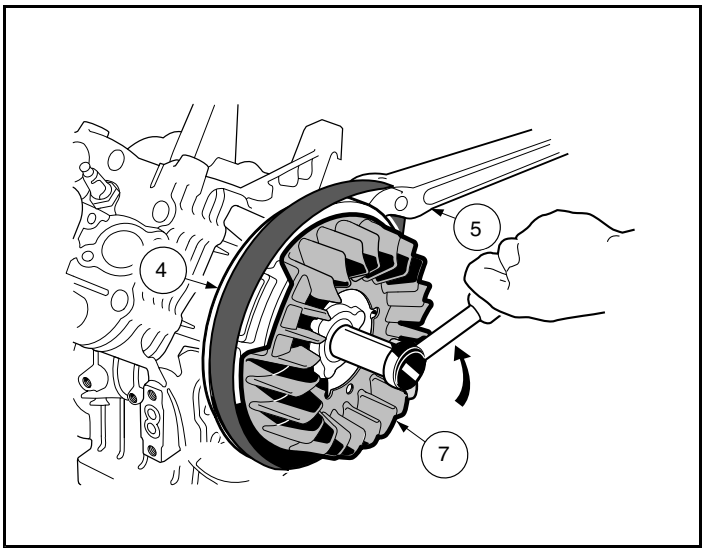

532

Figure 15-11 Flywheel Nut

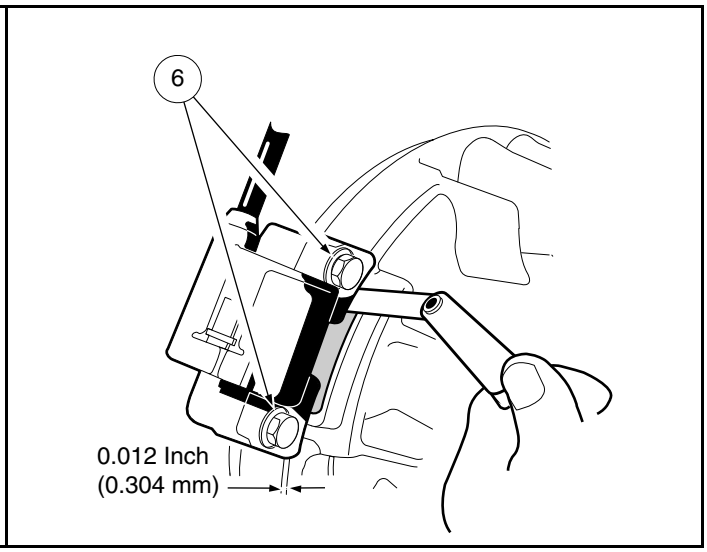

512

Figure 15-12 Adjust Ignition Coil Air Gap

FLYWHEEL INSTALLATION

1. Insert the flywheel key into the keyway in the crankshaft. Then align the keyway in the flywheel to the key and push the flywheel and fan assembly onto the crankshaft until it seats. Install flat washer and nut finger tight.
2. Use a strap wrench (3) to keep the flywheel and fan assembly (1) from turning while tightening the flywheel nut to 63 ft-lb (85.4 N·m) **(Figure 15-13, Page 15-10)**. **See following CAUTION.**

⚠ CAUTION

- **The flywheel nut has right-hand threads. Turn it clockwise to tighten, or counterclockwise to loosen.**
- **Be careful not to damage the fan blades. Use a strap wrench to hold flywheel. Do not place screwdriver or pry bar between fan blades.**

3. Install the fan housing and tighten the screws to 90 in-lbs (10 N·m).

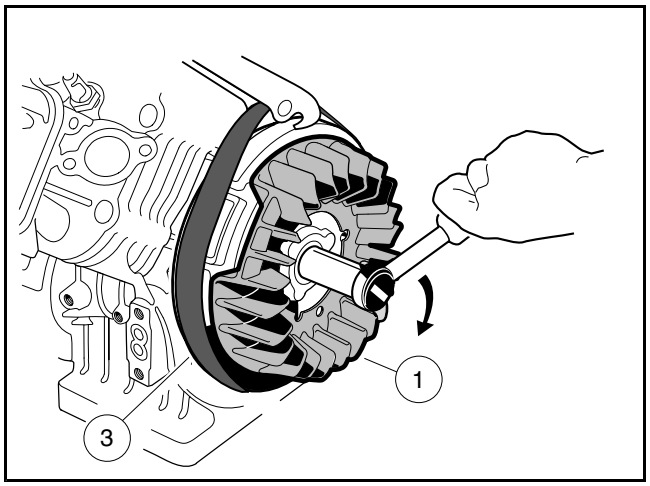

533
Figure 15-13 Fan and Flywheel Installation

IGNITION COIL INSTALLATION

1. Installation is the reverse of removal.
2. While tightening the two bolts (6), use a bronze feeler gauge to adjust the ignition coil air gap to 0.012 inch (0.304 mm) **(Figure 15-12, Page 15-9)**.
3. Tighten the two ignition coil bolts to 30 in-lb (3.4 N·m).

CRANKCASE COVER INSTALLATION

See Crankcase Cover Installation on page 14-6.

ENGINE INSTALLATION

See General Warnings on page 1-1.

1. Place engine onto engine mounting plate and tighten the mounting hardware (1, 2 and 5) to 13 ft-lb (17.7 N·m). Tighten nuts (6) to 17 ft-lb (23.1 N·m) **(Figure 15-6, Page 15-6)**.
2. Install drive clutch. **See Drive Clutch Installation on page 19-12.**
3. Install drive belt. **See Drive Belt Installation on page 19-3.**
4. Install muffler. **See Muffler Installation on page 17-1.**
5. Install starter/generator and belt. **See Starter/Generator Installation on page 13-11.**
6. Install the powertrain. **See Unitized Transaxle Installation on page 18-16.**
7. Install oil drain plug in the crankcase and tighten to 20 ft-lb (27.1 N·m). Apply a light film of oil on the seal of a new oil filter and install the filter on the crankcase. Fill the crankcase to the proper level with the correct type of oil. This engine should be regarded as a new engine for next scheduled oil change. See Section 10 – Periodic Maintenance.
8. Check all hardware for proper torque/tightness.
9. Check engine oil level.
   9.1. With vehicle on level surface, remove dip stick and clean with cloth **(Figure 15-14, Page 15-11)**.

9.2. Reinsert dip stick until fully seated.
9.3. Oil must be in the SAFE LEVEL range.

⚠ CAUTION

- **Do not overfill with oil.**

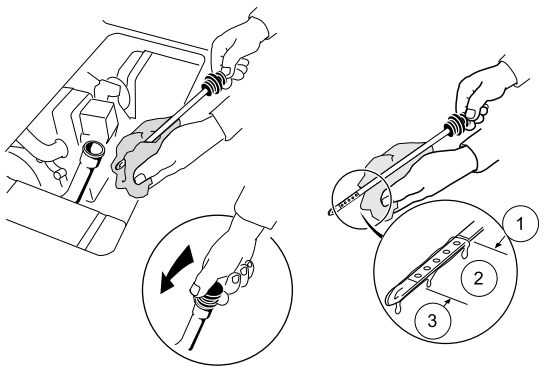

1.Full level 2. Safe level 3. Low level.

23

Figure 15-14 Check Engine Oil Level

10. Install a new or cleaned spark plug, gapped to 0.027-0.031 inch (0.69-0.79 mm), and connect plug wire to plug.
11. Connect battery. **See Connecting the Battery – Gasoline Vehicles on page 1-3.**
12. Adjust the engine RPM setting. **See Engine RPM Adjustment on page 16-8.**
13. Test-drive vehicle to ensure all systems are functional and correctly adjusted.

TORQUE SPECIFICATIONS

ITEM	SIZE	LIMITS
Cylinder head bolts	M8	220 in-lb (24 N·m)
Valve clearance adjustment nuts	M5	90 in-lb (10 N·m)
Connecting rod bolts (coat threads with engine oil)	M7	180 in-lb (20 N·m)
Flywheel retaining nut	M18	100 ft-lb (135 N·m)
Crankcase cover to block bolts	M8	22 ft-lb (31 N·m)
Starter/Generator bracket to block bolts	M8	200 in-lb (23 N·m)
Oil drain plug	M14	20 ft-lb (27.1 N·m)
Fan housing screws	M6	90 in-lb (10 N·m)
Fan shroud screws	M6	25 in-lb (2.8 N·m)
Bolts marked with “4” (when used with nuts)	M8 M6 M5	130 in-lb (15 N·m) 50 in-lb (5.9 N·m) 30 in-lb (3.4 N·m)

ADJUSTMENTS AND SETTINGS

ITEM	LIMITS
Spark plug gap (standard)	0.027 to 0.031 in. (0.69 to 0.79 mm)
Ignition coil air gap (standard)	0.012 in. (0.304 mm)
Oil pressure (min.) at fast idle speed	45.5 psi (314 kPa)
Oil filter: bypass-valve opening pressure	11.4 to 17.0 psi (78 to 118 kPa)
Compression pressure (min.) (with automatic compression release)	71 psi (483 kPa)
Crankcase vacuum (min.) at governed speed	1.18 in. (30 mm Hg)
Cylinder head-gasket surface flatness (max.)	0.002 in. (0.05 mm)
Valve clearance (exhaust, intake) when engine is cold	0.005 in. (0.127 mm)
Engine RPM	2900 (±30) RPM

⚠ DANGER

- **See General Warnings on page 1-1.**

⚠ WARNING

- **See General Warnings on page 1-1.**

GENERAL INFORMATION

The engine is equipped with a float bowl type carburetor with fixed jets that require no adjustment. The carburetor atomizes the fuel, mixes it with air, and feeds the combustible mixture into the cylinder.

CARBURETOR

See General Warnings on page 1-1.

Before suspecting the carburetor as the cause of poor engine performance, make sure the fuel and ignition systems are in proper operating condition. Check the following items:

- Spark plug and gap condition. **See Spark Plug Cleaning, Inspection and Repair on page 15-2.**
- Air filter element. **See Air Filter on page 16-11.**
- Fuel filter. **See Fuel Filter on page 16-14.**
- Choke and air intake system (for restriction of air flow). **See Choke and Air Intake System on page 16-9.**
- Fuel pump. **See Fuel Pump on page 16-15.**
- Fuel lines (from fuel tank to filter to pump to carburetor). **See Fuel Lines on page 16-20.**
- Exhaust system (for restrictions). See Section 17 – Exhaust System.

If the carburetor floods or leaks fuel at the float bowl gasket or carburetor vent tube, the fuel inlet valve could be worn or dirty. Another cause of this condition may be a damaged float that has filled with fuel and sinks.

For elevations above 3000 feet, main jets other than standard operate more effectively. The following chart lists the elevation ratings for various jet sizes. No adjustment is required for the pilot jet. If the vehicle idles roughly, turn the pilot air screw out until the vehicle idles smoothly.

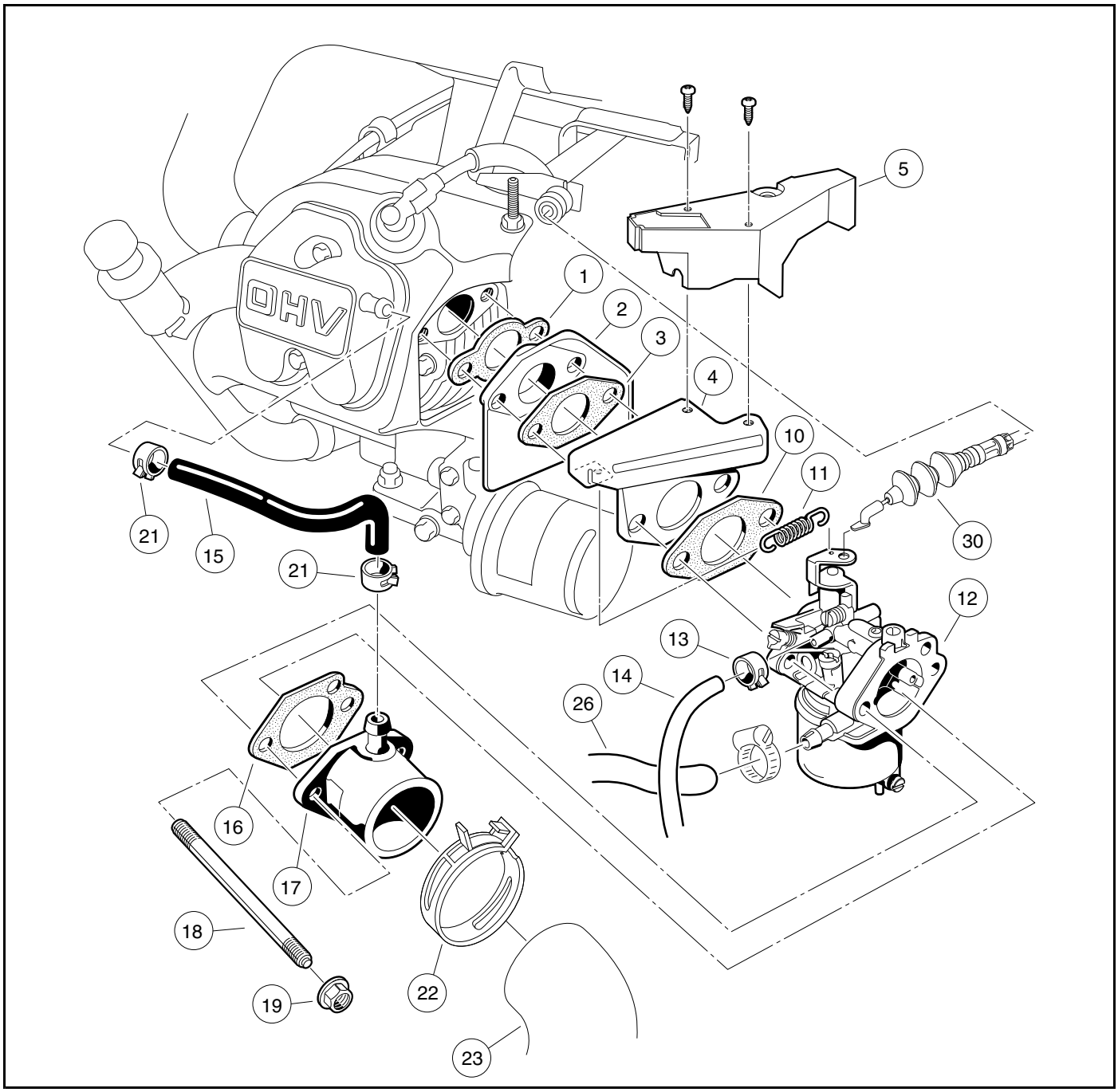

2439

Figure 16-1 Carburetor Mounting

MAIN JET ELEVATION/SIZE CHART

ALTITUDE	AS11 FE350 ENGINE MAIN JET SIZE
0-3000 ft. (0-914.4 m)	85
3000-5000 ft. (914.4-1524 m)	82
5000-8000 ft. (1524-2438.4 m)	80
8000-10,000 ft. (2438.4-3048 m)	78
10,000 ft. and over (3048 m and over)	75

ALTITUDE	AS26 FE350 ENGINE MAIN JET SIZE
0-3200 ft. (0-975 m)	85
3200-6500 ft. (975-1981 m)	82
6500-9800 ft. (1981-2987 m)	80
9800 ft. and above (2987 m and above)	78

CHANGING THE MAIN JET

See General Warnings on page 1-1.

1. Disconnect battery and spark plug wire(s). **See Disconnecting the Battery – Gasoline Vehicles, Section 1, Page 1-3.**
2. Remove the carburetor.
   - 2.1. Turn fuel shut-off valve on fuel tank to the closed (OFF) position **(Figure 16-15, Page 16-21)**.
   - 2.2. Loosen the intake air hose clamp (22) and disconnect the intake air hose (23) at the carburetor end only **(Figure 16-1, Page 16-2)**.
   - 2.3. Remove the governor guard (5).
   - 2.4. Disconnect the governor cable (30) from the carburetor.
   - 2.5. Disconnect the carburetor vent line (14).
   - 2.6. Disconnect the fuel supply line (26) at the carburetor end only. Temporarily plug the end of the fuel line to prevent fuel leakage.
   - 2.7. Remove the carburetor retaining nuts (19), intake pipe (17), and carburetor (12). **See following NOTE.**

NOTE: *Note the orientation of the gasket (16), between the carburetor intake pipe (17) and the carburetor body (12) so that it can be replaced in the same orientation* ***(Figure 16-1, Page 16-2)****.*

When removing the carburetor body, the throttle return spring (11) must be disconnected. Note its proper orientation so that it can be replaced in the same orientation.

The carburetor must be kept upright during removal.

3. Position the carburetor with the drain screw (11) over a catch basin **(Figure 16-4, Page 16-4)**.
4. Turn the carburetor bowl drain screw counterclockwise two or three turns and drain all the fuel from the bowl into the catch basin **(Figure 16-2, Page 16-4)**. Tighten the drain screw to 10 in-lb (1.1 N·m). Return fuel to the fuel tank or dispose of properly.
5. Mark the body of the carburetor and the carburetor fuel bowl with an indelible ink marker so that, after removal, the bowl can be installed again in the same position **(Figure 16-3, Page 16-4)**.

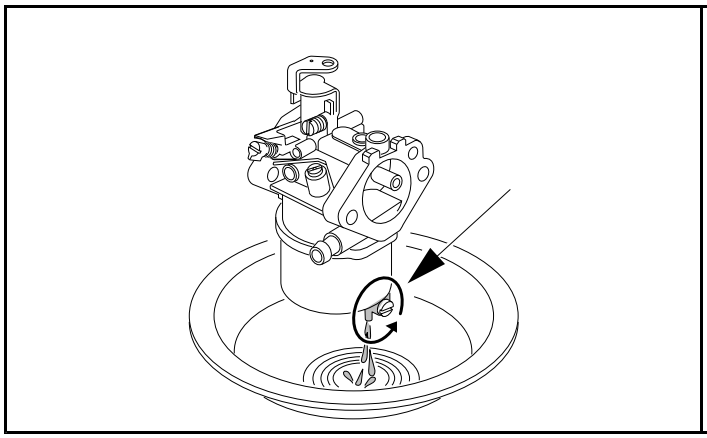

535

Figure 16-2 Drain Bowl

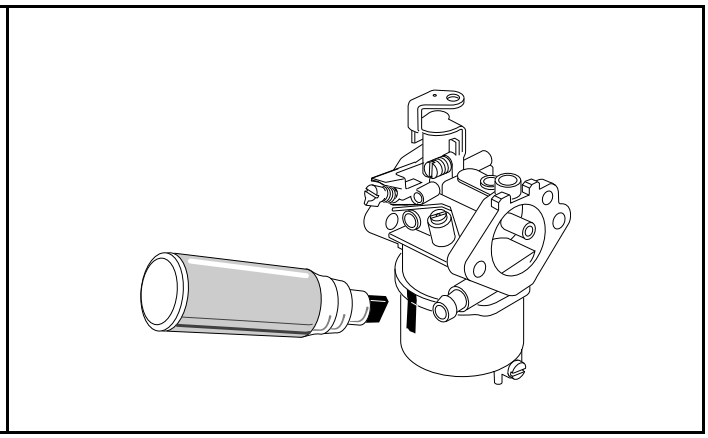

536

Figure 16-3 Mark Carburetor and Bowl for Alignment

6. Remove the carburetor fuel bowl retaining screw and washer (12), then remove the fuel bowl (10) and clean it with a nonflammable solvent **(Figure 16-4, Page 16-4)**. **See following NOTE.**

NOTE: *Make sure the fuel bowl gasket (9) remains properly seated in the carburetor body when the fuel bowl is removed* ***(Figure 16-4, Page 16-4)****.*

During normal operation, the fuel bowl retains the float pivot pin (6). Make sure that the float pivot pin does not fall out of the carburetor body after the fuel bowl is removed.

7. Remove the main jet (8) from the carburetor body and discard it **(Figure 16-4, Page 16-4)**. **See following NOTE.**

NOTE: *Make sure the fuel nozzle (7) does not fall out of the carburetor body after removal of the main jet. This is best accomplished by positioning the carburetor upside down during main jet removal* ***(Figure 16-4, Page 16-4)****.*

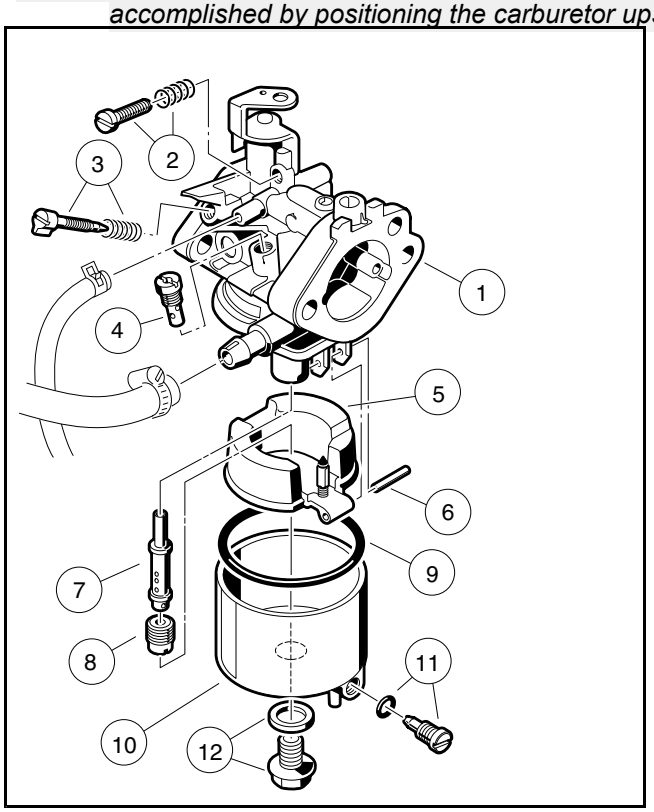

537

Figure 16-4 Carburetor Components

8. Select the proper size main jet. **See Main Jet Elevation/Size Chart on page 16-3.** Check the size designation on the jet to make sure it is the correct part.
9. Install the new main jet and tighten it to 12 in-lb (1.4 N·m). **See following CAUTION and NOTE.**

⚠ CAUTION

- **Do not remove the valve/spring assembly from the float assembly. Doing so will damage the spring.**

NOTE: *Inspect the main jet nozzle (7), and pilot jet (4) to ensure they are free from contamination* ***(Figure 16-4, Page 16-4)****. Replace any part that is clogged with contamination. Replace the float if it is damaged, or if the float valve is damaged or worn. Examine the float valve/spring assembly to make sure the spring is installed correctly* ***(Figure 16-5, Page 16-5)****.*

10. Install the fuel bowl. Make sure that it is positioned properly by aligning the marks applied in step 4. **See following CAUTION.**

⚠ CAUTION

- **Make sure the fuel bowl is properly seated against the carburetor fuel bowl gasket, and the gasket is not pinched.**

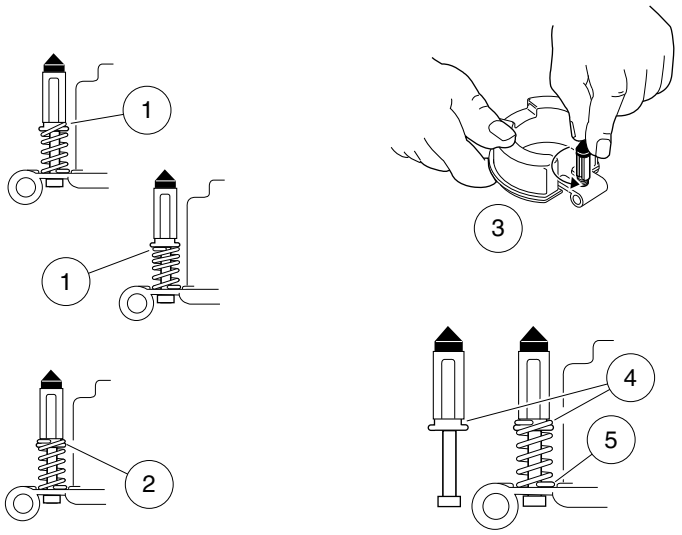

1. If spring looks like this... 2. then adjust spring to look like this by... 3. holding float firmly and rotating valve counterclockwise to seat spring in seat of float bowl 4. Check for coil located in groove above both ears. 5. Check for spring seated in recess of float.

538

Figure 16-5 Inspect Float Valve/Spring Assembly – Adjust If Required

11. Install the fuel bowl retaining screw and tighten it to 61 in-lb (6.9 N·m).
12. Write the size of the main jet on the fuel bowl with an indelible ink marker. This should be written in a location that will be visible when the carburetor is installed on the engine.
13. Install the carburetor on the engine **(Figure 16-1, Page 16-2)**.
    - 13.1. Attach the throttle return spring (11) to the carburetor and then to the throttle bracket (4) just before positioning the carburetor and securing it to the engine **(Figure 16-1, Page 16-2)**.
    - 13.2. Install the intake pipe gasket (16) (check for proper orientation) and intake pipe (17).
    - 13.3. Install the carburetor retaining nuts (19) and tighten them to 50 in-lb (5.7 N·m).
14. Connect fuel supply line (26) and tighten screw clamp to 9 in-lb (1.0 N·m) **(Figure 16-1, Page 16-2)**.

15. Install carburetor vent line (14) and clamp (13).
16. Install the governor cable (30).
17. Install the governor guard (5), flat washer and nylon lock nut. Tighten to 30 in-lb (3.4 N·m).
18. Install the intake hose (23) and secure with hose clamp.

NOTE: *Make sure the intake hose is not twisted during installation.*

19. Turn fuel shut-off valve on top of fuel tank to the ON position **(Figure 16-15, Page 16-21)**.
20. Connect battery and spark plug wire(s). **See Connecting the Battery – Gasoline Vehicles, Section 1, Page 1-3.**
21. Test drive the vehicle.

ENGINE CONTROL LINKAGE

See General Warnings on page 1-1.

GENERAL INFORMATION

For proper vehicle operation, it is important the accelerator pedal, governor linkage, and throttle adjustments are done correctly and in the proper sequence. **See following CAUTION.**

CAUTION

- **Improper adjustment can result in poor vehicle performance and/or damage to the engine components.**

GOVERNOR CABLE

Governor Cable Removal

1. Disconnect battery and spark plug wire(s). **See Disconnecting the Battery – Gasoline Vehicles on page 1-3.**
2. Remove the governor guard (5) **(Figure 16-1, Page 16-2)**.
3. Release the governor cable (8) from brackets (10 and 11) **(Figure 16-6, Page 16-7)**.
4. Remove the ends of cable (8) from the governor lever arm and the carburetor and remove the cable from the vehicle.

Governor Cable Installation and Adjustment

1. Insert the ends of cable (8) into the respective holes on the carburetor and the governor lever arm **(Figure 16-6, Page 16-7)**.
2. Press on the cable (8) to snap it in place in brackets (10 and 11).
3. With the governor lever arm loose on the governor shaft, use a 1/8-inch punch or scratch awl to turn the governor arm shaft counterclockwise until it stops. Then pull the governor lever arm rearward until the carburetor throttle is in the “wide open throttle” (WOT) position.
4. While holding the arm and shaft in the fully counterclockwise position, tighten the governor arm lever nut to 36 in-lb (4.0 N·m).
5. Check engine RPM adjustment. **See Engine RPM Adjustment on page 16-8.**

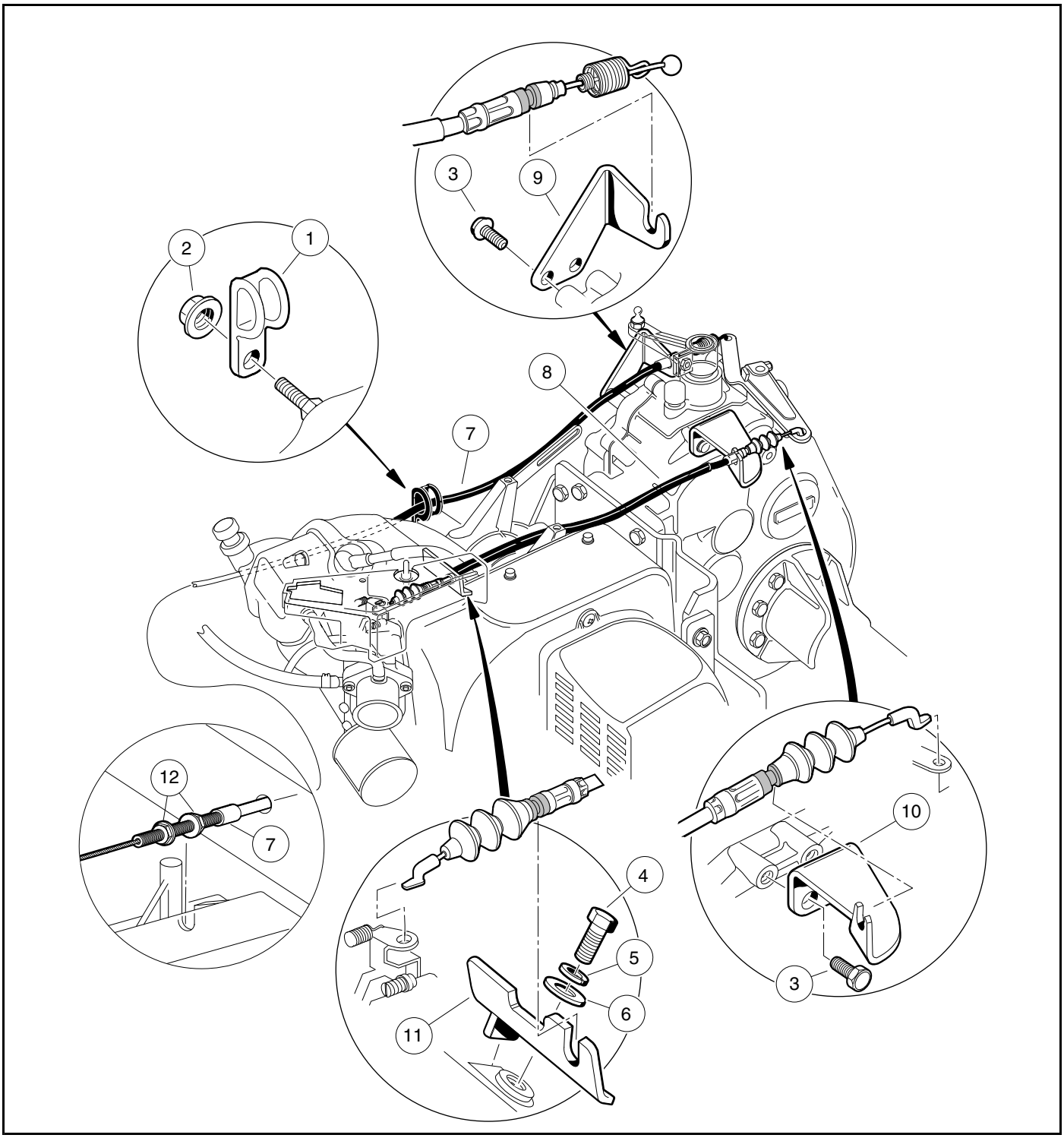

2440

Figure 16-6 Governor and Accelerator Cables

ACCELERATOR CABLE

Accelerator Cable Removal

1. Disconnect battery and spark plug wire(s). **See Disconnecting the Battery – Gasoline Vehicles on page 1-3.**

2. Access the pedal group and remove accelerator cable from the pedal group. **See Pedal Group Removal on page 5-1. See Pedal Group Removal on page 5-7.**
3. Loosen the two lock nuts (12) that secure the accelerator cable to the vehicle **(Figure 16-6, Page 16-7)**.
4. Release the accelerator cable housing from bracket (9).
5. Release the end of accelerator cable from the governor lever arm and remove the cable from vehicle.

Accelerator Cable Installation

1. Insert the accelerator cable through the hole in the frame and feed it towards the pedal group. Connect the accelerator cable to the pedal group. **See Accelerator and Brake Pedal Group on page 5-1.**
2. Connect the end of the accelerator cable (7) to the governor lever arm **(Figure 16-6, Page 16-7)**.
3. Press on the cable (7) to snap it in place in bracket (9).
4. Adjust two lock nuts (12) to remove excess slack in the accelerator cable. Finger-tighten the two lock nuts.
5. Before tightening the cable housing lock nuts make sure the engine RPM adjustment is correct. **See Engine RPM Adjustment on page 16-8.**

CLOSED THROTTLE OR IDLE ADJUSTMENT

When the accelerator pedal is released, the engine will stop. Therefore, it is not possible to measure or set idling speed under normal vehicle operating conditions. Set throttle valve as follows:

1. Loosen the carburetor idle screw so that it is not touching the throttle lever **(Figure 16-7, Page 16-8)**.
2. Slowly tighten the idle screw until it lightly touches the throttle lever, then tighten it an additional 3/4 turn.

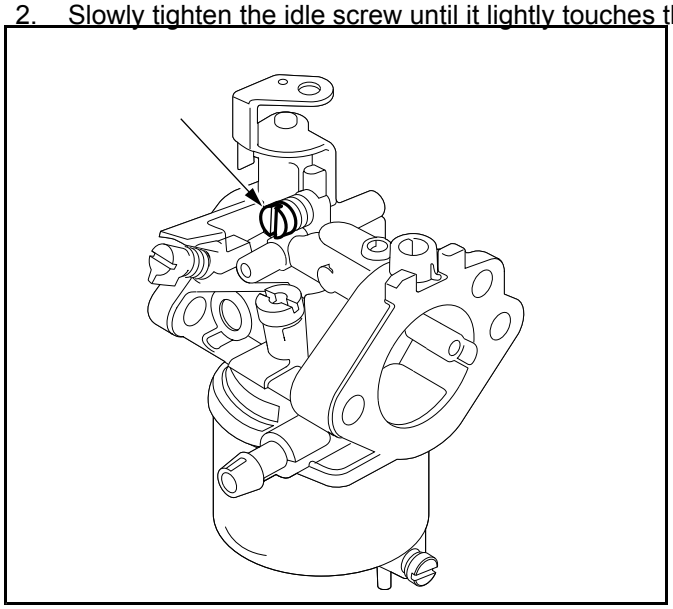

543

Figure 16-7 Idle Screw

ENGINE RPM ADJUSTMENT

⚠ DANGER

- **Do not operate gasoline vehicle in an enclosed area without proper ventilation. The engine produces carbon monoxide, which is an odorless, deadly poison.**

1. If the governor is adjusted, proceed to step 2; otherwise, adjust the governor. **See Governor Cable Installation and Adjustment on page 16-6.**

2. Connect battery and spark plug wire(s). **See Connecting the Battery – Gasoline Vehicles on page 1-3.**
3. Place the Forward/Reverse handle in the NEUTRAL position, chock the wheels, and place the neutral lockout cam in the MAINTENANCE position.
4. Connect a tachometer (P/N 1016112) to the spark plug lead.
5. With the tachometer connected, and the engine at normal operating temperature, check high speed RPM. With the accelerator pedal pressed to the floor, the tachometer should read 2950 ±30 RPM.
6. To **reduce** RPM, adjust the two lock nuts (12) to move the cable housing toward the rear of the vehicle until the specified RPM is reached **(Figure 16-6, Page 16-7)**. To **increase** RPM, adjust the two lock nuts (12) to move the cable housing forward until the specified RPM is reached.
7. Be sure both lock nuts are locked against the bracket and then check the RPM again. If the RPM needs to be adjusted, repeat step 6.
8. If more adjustment is required than the cable housing will allow, make sure the spring on the other end of the accelerator cable is properly positioned. Excessive belt and torque converter wear can also prevent proper RPM adjustment. Check them for excessive wear. See Section 19 – Torque Converter: Gasoline Vehicle.

CHOKE AND AIR INTAKE SYSTEM

See General Warnings on page 1-1.

GENERAL INFORMATION

The choke and air intake system is a simple mechanism requiring very little or no maintenance. The system consists of a choke assembly mounted at the center of the kick plate. An air filter housing draws clean, cool air from beneath the vehicle via an opening between the kick plate and the fuel bucket. The air passes through an air filter, through the choke assembly, and through a hose to the carburetor. **(Figure 16-8, Page 16-9)**

The choke system aids in starting the engine in cold weather. When starting a cold engine, the spring loaded choke cover is pushed in by hand. This restricts the air flow, creating a “fuel rich” mixture in the carburetor. The choke cover is held in until the engine starts, and then is released. The air flow to the engine is no longer restricted, and the engine operates normally.

The choke assembly is adjusted at the factory and does not require field adjustment; however, if the choke assembly is subjected to abuse or damaged, it may become necessary to replace the assembly.

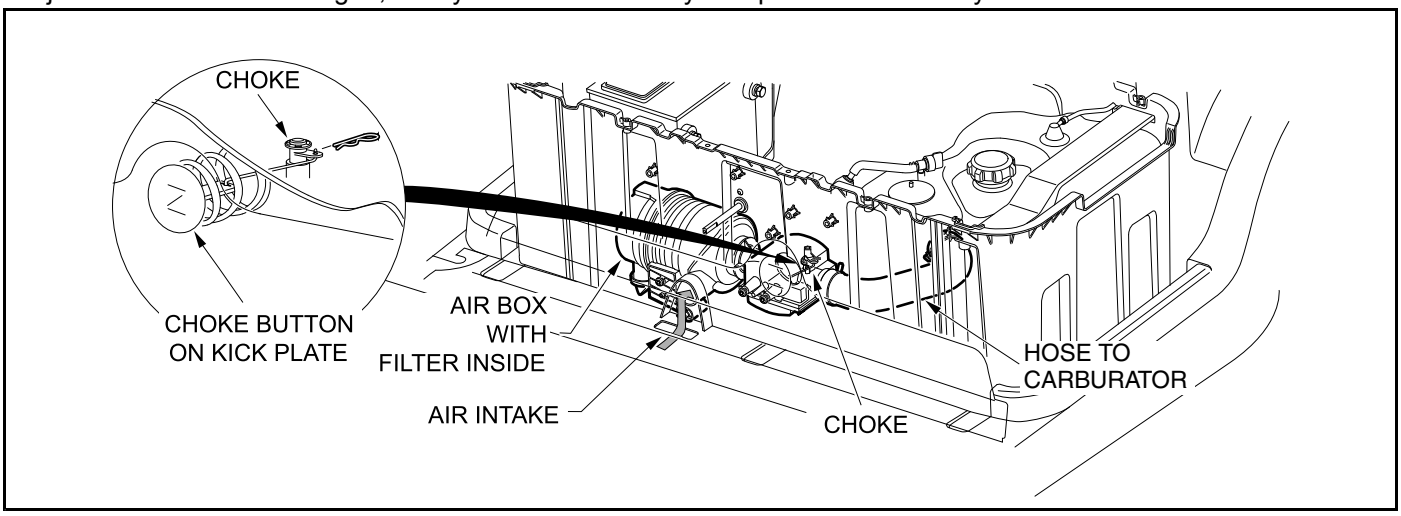

2441

Figure 16-8 Air Intake and Choke Assembly

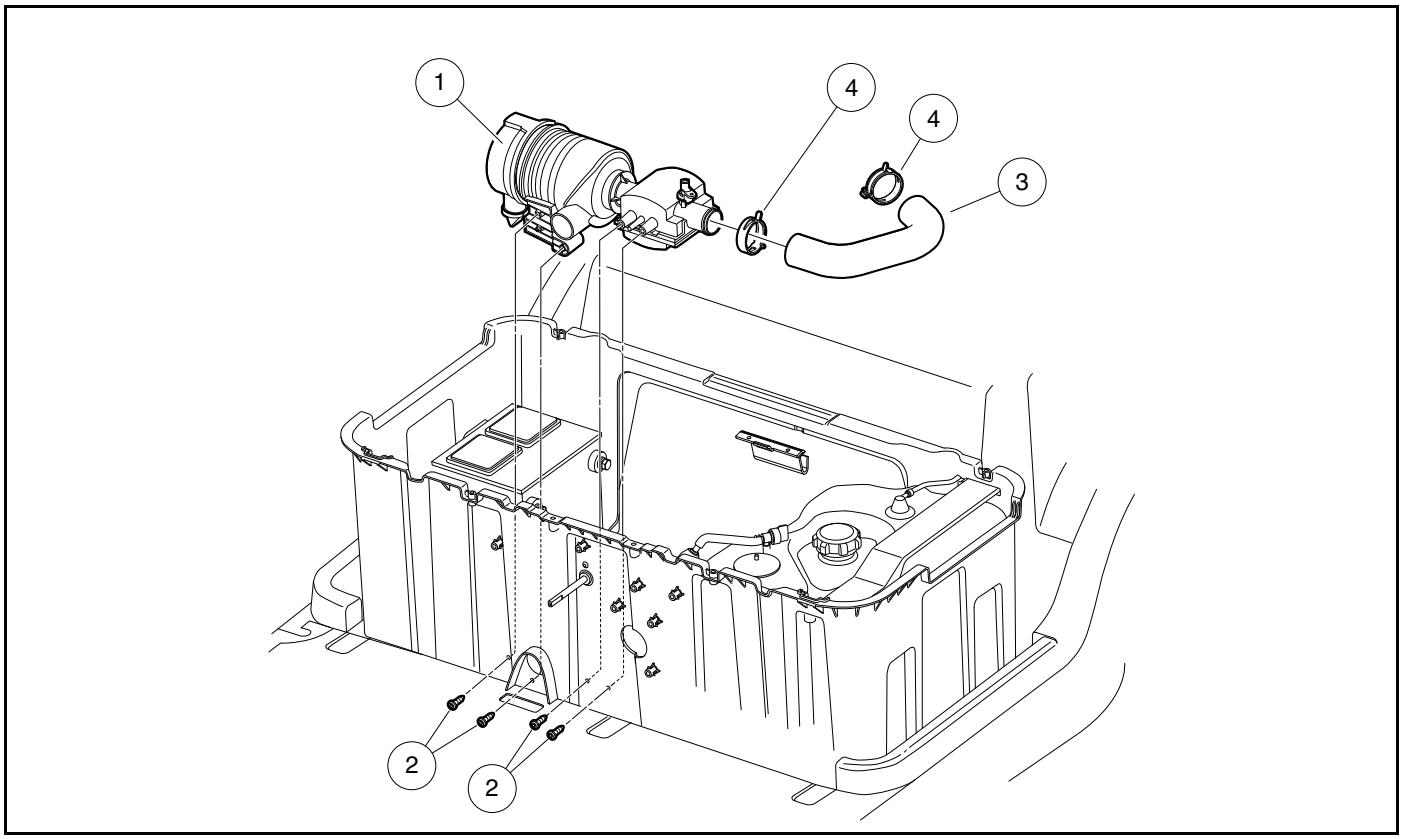

2442

Figure 16-9 Air Intake and Choke Assembly

CHOKE BUTTON

The choke button actuates the choke mechanism via a rod that connects to the button and the choke **(Figure 16-8, Page 16-9)**. Pressing in the button actuates the choke. A spring clip attaches the rod to the choke. If the choke button requires service, the kick plate must be removed. **See Kick Plate and Choke Button Bezel on page 4-8.**

AIR INTAKE COMPONENTS REMOVAL

1. Turn the key switch to the OFF position and remove the key, place the Forward/Reverse handle in the NEUTRAL position, and chock the wheels.
2. Access the engine compartment.
3. Disconnect battery and spark plug wire(s). **See Disconnecting the Battery – Gasoline Vehicles on page 1-3.**
4. Hose (3) may be removed by removing the clamps (4) at the choke and the carburetor **(Figure 16-9, Page 16-10)**.
5. The air intake assembly (1) is secured to the fuel bucket with four screws (2). Access to the screws requires that the kick plate be removed. **See Kick Plate and Choke Button Bezel on page 4-8.**

AIR INTAKE COMPONENTS INSTALLATION

⚠ WARNING

- **Intake hose is made from a special fire retardant neoprene material. Use of any hose that does not meet CCI specifications could create a fire hazard.**

1. Position air intake assembly (1) inside the fuel bucket **(Figure 16-9, Page 16-10)**. Secure intake assembly with four screws (2). Tighten screws to 2.7 ft-lb (3.5 N·m).
2. Install hose (3) and secure one end to the air intake assembly (1) and one end to the carburetor. Install clamps (4) to secure the hose in place.
3. Install kick plate and choke button. **See Kick Plate and Choke Button Bezel on page 4-8.**

AIR FILTER

General Information

The air filter should be checked every year or 100 hours. More frequent service may be required in extremely dirty operating environments. Need for immediate servicing will be indicated by a loss of power, sluggish acceleration, or an engine which runs roughly with excessive black exhaust smoke.

Air Filter Replacement

1. Access the engine compartment.
2. Pull the yellow tab (1) on the air filter cover (2) away from the air filter housing **(Figure 16-10, Page 16-12)**.
3. Rotate the cover counterclockwise to approximately the 10 o'clock position to release the internal locking tabs. Remove the cover.
4. Remove the air filter (3) and dispose of properly.
5. Using a clean cloth, wipe away any dust or dirt from inside the air filter housing. Remove all dirt build-up around the inside lip of the housing or the cover will not seal properly.
6. Install new air filter, inserting the open end into the housing first.
7. **Place the cover (2) over the housing. Press firmly to engage the seals and rotate the cover clockwise until the yellow tab is at the 11 o'clock position.**
8. Press in the yellow tab (1) to lock the cover on the housing. **See following CAUTION.**

CAUTION

- **Engine damage will occur if the air filter cover is not properly secured.**

caution continued on next page

CAUTION

- **If air filter housing is extremely dirty, clean thoroughly.**
- **Use only Club Car replacement air filters (P/N 102558201) or equivalent. The use of other air filters could result in engine damage. If the air filter is too small, the cover will seat before the filter can seal, leaving space for dirt to pass into the engine on all sides of the element. This will damage the engine and void the warranty.**

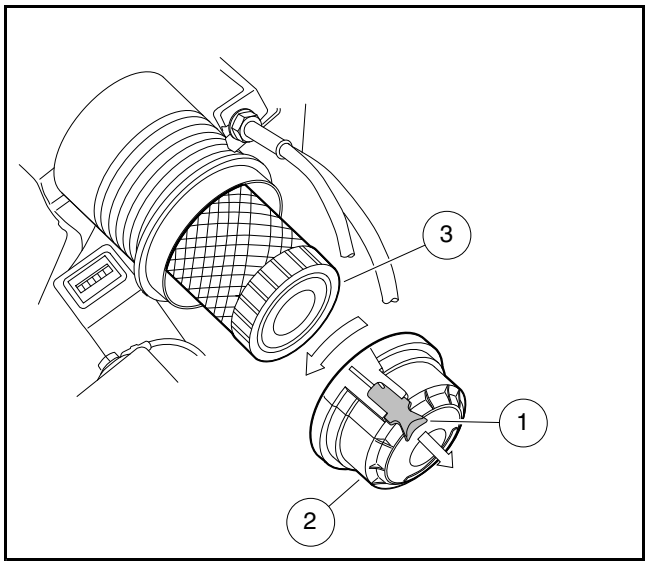

2443

Figure 16-10 Air Filter

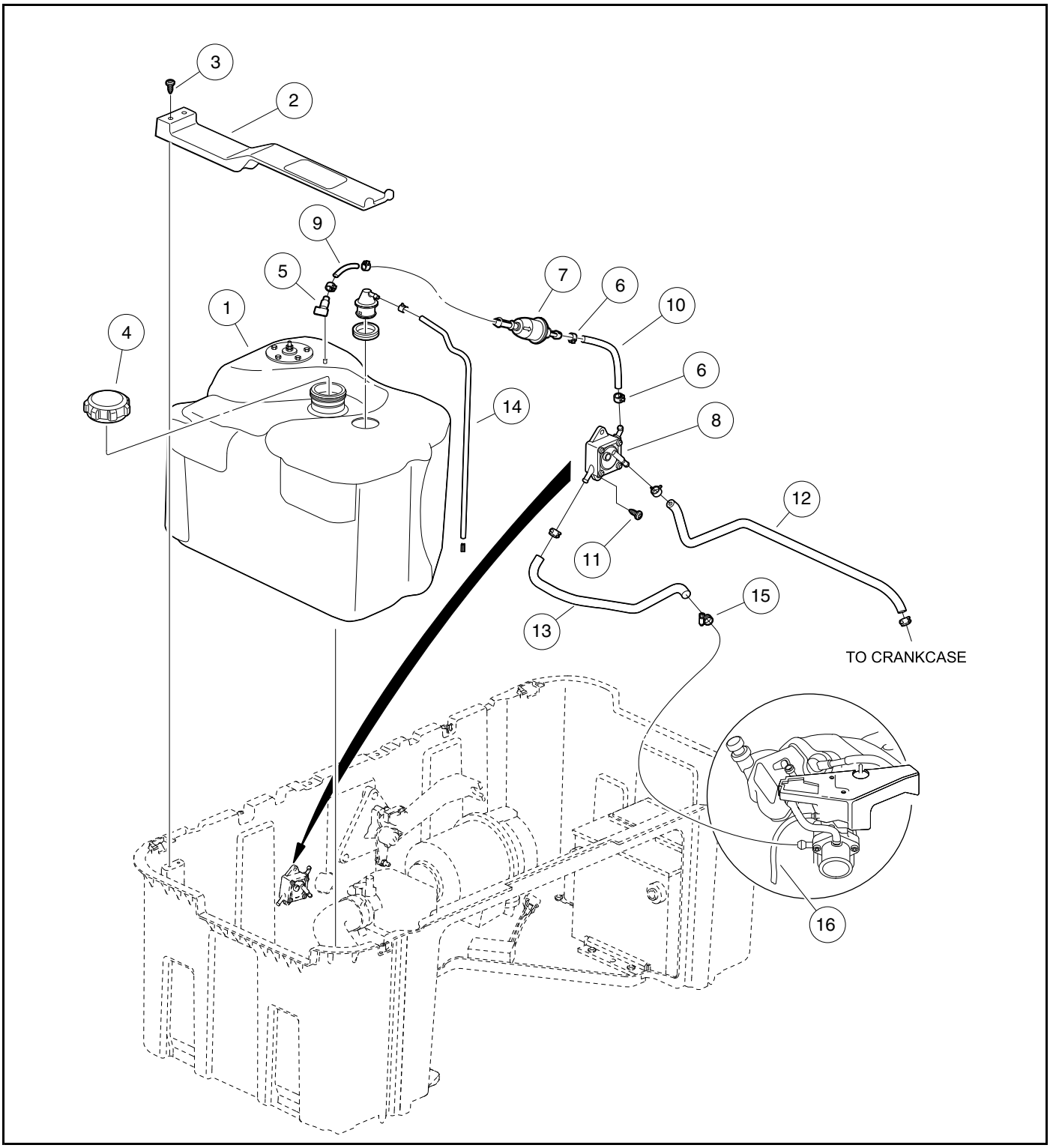

2444

Figure 16-11 Fuel and Vent Lines

FUEL FILTER

See General Warnings on page 1-1.

GENERAL INFORMATION

Fuel is supplied to the fuel pump and carburetor through flexible lines. An in-line filter is installed between the fuel tank and the fuel pump **(Figure 16-11, Page 16-13)**. The filter, fuel lines, and the fuel tank vent should be inspected periodically for leaks.
The fuel filter should be replaced when necessary, but under no circumstance should the period of time between filter changes exceed two years or 200 hours.

FUEL FILTER REMOVAL

1. Turn the key switch to the OFF position and remove the key, place the Forward/Reverse handle in the NEUTRAL position, and chock the wheels.
2. Access the engine compartment.
3. Disconnect battery. **See Disconnecting the Battery – Gasoline Vehicles on page 1-3.**
4. To prevent fuel drainage, turn the fuel shut-off valve (5) on the fuel tank (1) **(Figure 16-11, Page 16-13)** to the closed (OFF) position **(Figure 16-15, Page 16-21)**.
5. Remove the clamps (6) and fuel lines (9 and 10) from the filter (7) and plug the fuel lines **(Figure 16-11, Page 16-13)**.

FUEL FILTER INSTALLATION

CAUTION

- **Fuel filter is marked with flow direction arrows. Make sure that the filter is installed with arrows pointing in the direction of fuel flow from tank to the fuel pump.**

1. Install the fuel filter (7) in the fuel line. Use new clamps (6) **(Figure 16-11, Page 16-13)**.
2. Turn the fuel shut-off valve to the ON position **(Figure 16-15, Page 16-21)**.
3. Connect battery. **See Connecting the Battery – Gasoline Vehicles on page 1-3.**
4. Place the Forward/Reverse handle in the NEUTRAL position, chock the wheels, and place the neutral lockout cam in the MAINTENANCE position. Start the engine and check for fuel leaks. **See following DANGER.**

⚠ DANGER

- **Repair all fuel leaks before operating the vehicle.**

5. Place the neutral lockout cam in the OPERATE position.

FUEL PUMP

See General Warnings on page 1-1.

NOTE: *A plastic fuel pump replaced the metal fuel pump during the 2010 model year. This plastic pump cannot be disassembled and must be replaced.*

GENERAL INFORMATION

The gasoline vehicle is equipped with an impulse fuel pump. If the fuel pump is not operating properly, perform the following tests:

- Make sure all hose clamps are tight.
- Inspect the impulse line and fuel lines for damage or clogging.
- Make sure the air vent on the fuel pump is not clogged with dirt.
- Make sure the fuel filters are not clogged.

NOTE: *To clean the air vent, the fuel pump must be disassembled (metal pump) or replaced (plastic pump).*

FUEL PUMP REMOVAL

1. Turn the key switch to the OFF position and remove the key, place the Forward/Reverse handle in the NEUTRAL position, and chock the wheels.
2. Disconnect battery. **See Disconnecting the Battery – Gasoline Vehicles, Section 1, Page 1-3.**
3. Turn fuel shut-off valve on top of the fuel tank to the closed (OFF) position **(Figure 16-15, Page 16-21)**.
4. Remove hardware (11) attaching the fuel pump (8) and lift the fuel pump out of the engine compartment **(Figure 16-11, Page 16-13)**.
5. Remove the clamp (6) and impulse line (12) from fuel pump.
6. Disconnect the fuel lines (10 and 13) from the pump and plug them to prevent fuel leakage. **See following WARNING.**

⚠ WARNING

- **Carefully drain any fuel remaining in the pump into an approved container. Add drained fuel back into fuel tank or dispose of properly.**

FUEL PUMP DISASSEMBLY (METAL PUMP ONLY)

⚠ CAUTION

- **Fuel pump gaskets and diaphragms must be installed in exactly the same positions and orientations they were in before disassembly, or the pump could leak. If leaking occurs, all new gaskets and diaphragms must be installed.**

NOTE: *A fuel pump rebuild kit is available from your distributor/dealer (P/N 1014524). This kit includes all gaskets, diaphragms, and valves.*

1. Match mark the fuel pump and cover before disassembly.

2. Remove four screws (24) and lock washers (25) from front of the fuel pump **(Figure 16-12, Page 16-16)**.
3. Remove the front cover (37) of the fuel pump while holding the rest of the pump intact.
4. Note the orientations of the impulse gasket (27), the diaphragm (28), and the gasket (29), then remove them from the pump.
5. If the impulse gasket (27) and the diaphragm (28) come off with the front cover, note their orientations and remove them **(Figure 16-12, Page 16-16)**.
6. Remove the pumping chamber (30).
7. Remove the back cover (36), the fuel diaphragm (34), and gasket (35) **(Figure 16-12, Page 16-16)**.

FUEL PUMP CLEANING AND INSPECTION (METAL PUMP ONLY)

1. Using a nonflammable solvent, clean the front cover, pumping chamber, and back cover. Be sure the vent (40) on the front cover is clean both inside and out.
2. Inspect the valve assemblies (31, 32, and 33) and all gaskets and diaphragms for damage **(Figure 16-12, Page 16-16)**.
3. If a valve assembly is damaged, the rubber retaining plug (33) and valve assembly must be replaced.

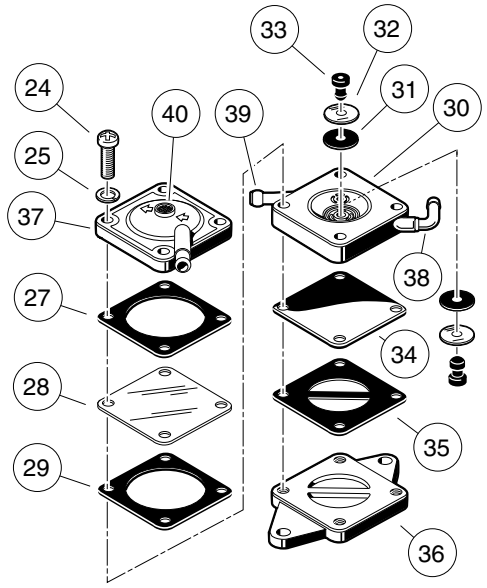

547

Figure 16-12 Fuel Pump

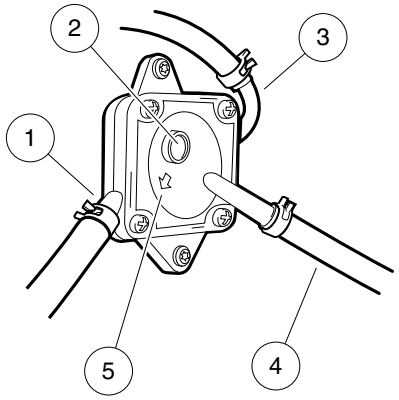

1. Fuel Outlet 2. Vent 3. Fuel Inlet 4. Impulse Line 5. Direction of Fuel Flow

2445

Figure 16-13 Fuel Pump Orientation

FUEL PUMP ASSEMBLY (METAL PUMP ONLY)

1. Install the fuel gasket (35) and diaphragm (34) on the back cover (36) **(Figure 16-12, Page 16-16)**.
2. Install the valve assembly in the pumping chamber (30). **See following CAUTION.**

⚠ CAUTION

- **If the valve assembly is not installed exactly as shown (Figure 16-12, Page 16-16), the impulse fuel pump will not operate properly.**

3. Install the pumping chamber (30) on top of the fuel diaphragm (34). Be sure the fuel inlet (38) and the fuel outlet (39) align with the arrows on the front of the front cover **(Figure 16-12, Page 16-16)**.
4. Install the gasket (29), clear impulse diaphragm (28), and the paper impulse gasket (27) to the pumping chamber (30).
5. Install the front cover (37) and then the lock washers (25) and four screws (24) on the assembly **(Figure 16-12, Page 16-16)**. Be sure the arrows on the front cover point from the fuel inlet to the fuel outlet **(Figure 16-13, Page 16-16)**. Tighten the screws to 26 in-lb (3.0 N·m).

FUEL PUMP INSTALLATION

NOTE: *This gasoline vehicle complies with the California Air Resources Board (CARB) evaporative emissions regulations when equipped with MARK 4 DAYPERM C-U-06-030 or AVON GREENBAR G-05-018 fuel hose (P/N 102865101). To remain in compliance with California regulations, replace any fuel hose on this vehicle with Club Car P/N 102865101 having 'DAYPERM C-U-06-030' or 'AVON GREENBAR G-05-018' printed on the hose, or equivalent.*

1. Connect to the fuel pump the fuel line (10) that comes from the fuel filter (7). Install a new clamp (6). Route the fuel lines as shown **(Figure 16-11, Page 16-13)**.

NOTE: *Be sure to connect the fuel line (10), that comes from the fuel filter (7), to the inlet nipple on the pump. Direction of fuel flow is indicated by the arrows on the fuel pump* ***(Figure 16-11, Page 16-13). See also Figure 16-13, Page 16-16.***

2. Connect to the output side of the fuel pump, the fuel line (13) that goes to the carburetor.
3. Connect the impulse line (12) to the bottom nipple on the fuel pump. Use a new clamp (6).
4. Install the fuel pump. Tighten hardware (11) to 40 in-lb (4.5 N·m) **(Figure 16-11, Page 16-13)**.
5. Connect battery. **See Connecting the Battery – Gasoline Vehicles, Section 1, Page 1-3.**
6. Turn the fuel shut-off valve on top of the fuel tank to the open position **(Figure 16-15, Page 16-21)**.
7. Place the Forward/Reverse handle in the NEUTRAL position, chock the wheels, and the neutral lockout cam in the MAINTENANCE position. **See following DANGER.**

⚠ DANGER

- **Repair all fuel leaks before operating the vehicle.**

8. Start the engine and check for fuel leaks. If the fuel pump leaks, a rebuild kit must be installed to replace all gaskets and diaphragms.
9. Place the neutral lockout cam in the OPERATE position.

FUEL TANK

See General Warnings on page 1-1.

GENERAL INFORMATION

The vehicle is equipped with a high impact plastic, 6.7 gallon (25.4 liter) fuel tank.

⚠ WARNING

- **If the fuel tank is damaged, replace it. Do not attempt to repair it. See the following tank removal and disposal procedure.**

CAUTION

- **Add only unleaded fuel to the tank. Do not put oil in the fuel tank.**

FUEL TANK REMOVAL

1. Place the Forward/Reverse handle in the NEUTRAL position and the neutral lockout cam in the MAINTENANCE position.
2. Turn fuel shut-off valve to the closed (OFF) position and run the engine until fuel remaining in the carburetor, fuel pump, and fuel lines is used up and the engine stalls **(Figure 16-15, Page 16-21)**.
3. Turn the key switch to the OFF position and remove the key, place the Forward/Reverse handle in the NEUTRAL position, and chock the wheels.
4. Disconnect battery. **See Disconnecting the Battery – Gasoline Vehicles on page 1-3.**
5. Return the neutral lockout cam to the OPERATE position.
6. Loosen, but do not remove, the carburetor drain screw (11) and drain fuel remaining in the carburetor bowl into an approved container **(Figure 16-4, Page 16-4)**. Retighten carburetor drain screw.
7. Using a siphon with a suction device, siphon all fuel out of the tank and into an approved container. **See following DANGER and WARNING.**

⚠ DANGER

- **Gasoline – Flammable! Explosive! Do not smoke. Keep sparks and flames away from the vehicle and service area. Service only in a well-ventilated area.**

⚠ WARNING

- **Do not attempt to siphon fuel using a hose that does not have a built-in suction device.**
- **Do not attempt to siphon fuel using your mouth.**

8. If vehicle is equipped with a fuel gauge, disconnect the black wire and orange wire from the fuel level sending unit on the tank **(Figure 16-14, Page 16-19)**. Do not remove the lower nut on the center stud of the sending unit. If vehicle is not equipped with a fuel level sending unit, disconnect black ground wire. **See following WARNING.**

⚠ WARNING

- **Make sure the key switch is off before disconnecting wiring.**

9. Remove the vent tube (14) and fuel line (9) from the fuel tank **(Figure 16-11, Page 16-13)**.
10. Remove two screws (3) holding the forward end of the fuel tank hold-down (2). Lift up on the forward end of the hold-down and release the rear end from the fuel bracket.
11. Lift the fuel tank (1) out of the vehicle.

FUEL TANK DISPOSAL

1. Remove the cap from the tank. Thoroughly rinse the cap with water. The cap may be discarded or kept as a spare.
2. In a well-ventilated area, flush the fuel tank with water to remove any remaining fuel.
3. In a well-ventilated area, set the tank upside down so that the water can drain out of it. To make sure that the tank dries completely, allow the tank to sit for 24 hours. **See following CAUTION.**

⚠ CAUTION

- **Dispose of wastewater and fuel tank in accordance with local, state, and federal laws and ordinances.**

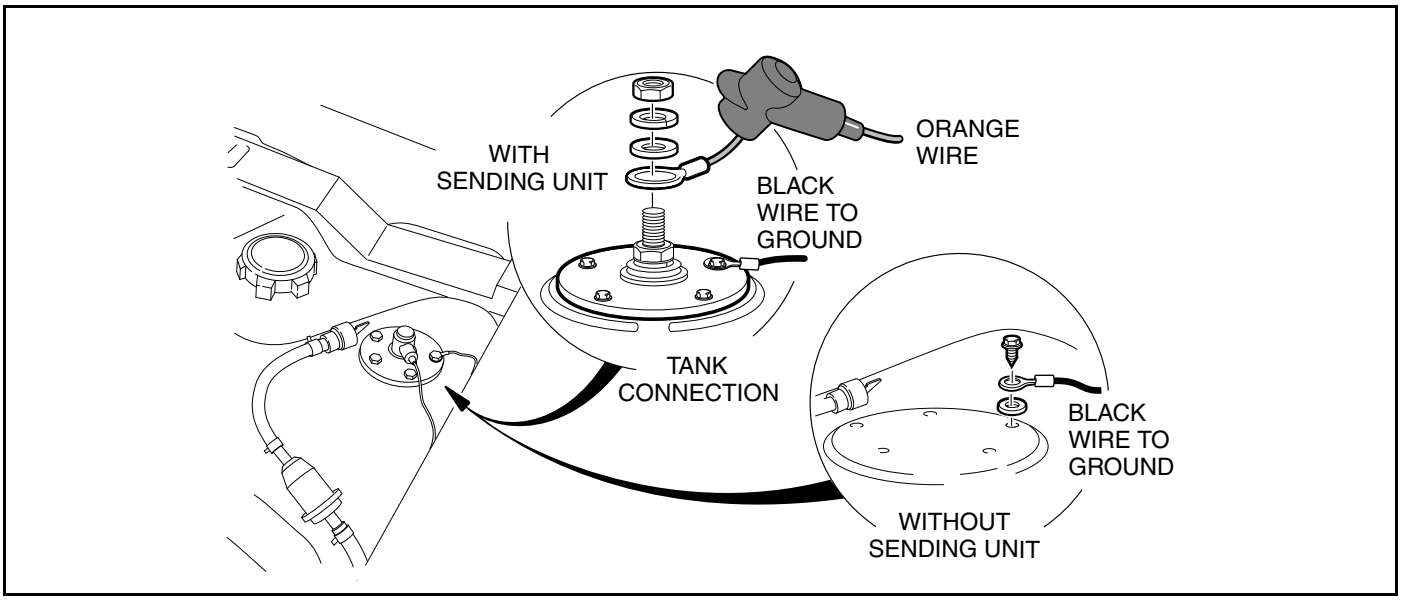

2446

Figure 16-14 Fuel Level Sending Unit

FUEL TANK STORAGE

1. Remove the cap from the tank and thoroughly rinse it with water.
2. In a well-ventilated area, flush the fuel tank with water to remove any remaining fuel.
3. In a well-ventilated area, set the tank upside down so that the water can drain out of it. To make sure that the tank dries completely, allow the tank to sit for 24 hours.
4. Store the tank upside down, with the cap installed, in a well-ventilated area.

FUEL TANK INSTALLATION

1. Place the fuel tank in the vehicle.
2. Secure the tank with the fuel tank hold-down (2) **(Figure 16-11, Page 16-13)**.
   2.1. Insert the tabs on the rear of the hold-down into the slots on the back of the fuel bucket.
   2.2. Pivot hold-down to place the front edge over mounting holes. Install two screws (2) to secure the hold-down. Tighten screws to 31 in-lb (3.5 N·m).
3. Connect the vent tube (14) to the fuel tank vent **(Figure 16-11, Page 16-13)**.
4. Connect the fuel line (9) to the fuel tank shut-off valve (5). Use new clamps (6) **(Figure 16-11, Page 16-13)**.

5. If vehicle is equipped with fuel level sending unit, connect the black wire from the fuel gauge to one of the fuel level sending unit screws. Connect the orange wire to the center stud and install the flat washer, lock washer, and nut. Tighten to 18 in-lb (2.0 N·m). Slide the rubber boot over the stud **(Figure 16-14, Page 16-19)**. If not equipped with fuel level sending unit, connect black wire to ground screw on fuel tank. Tighten to 18 in-lb (2.0 N·m).

⚠ WARNING

- **Static electricity on fuel tank can cause arching and ignite fuel vapors. Ensure that ground wire is properly connected.**

6. Add fuel to the tank.
7. Connect battery. **See Connecting the Battery – Gasoline Vehicles on page 1-3.**
8. Ensure that the wheels are chocked, the Forward/Reverse handle is in the NEUTRAL position, and that the neutral lockout cam is in the MAINTENANCE position.
9. Check to be sure the fuel shut-off valve on top of the fuel tank is in the open (ON) position **(Figure 16-15, Page 16-21)**.
10. Turn the key switch to the ON position and press the accelerator pedal to start the engine. **See following DANGER.**

⚠ DANGER

- **Do not operate gasoline vehicle in an enclosed area without proper ventilation. The engine produces carbon monoxide, which is an odorless, deadly poison.**
- **After installing the fuel tank and adding fuel, carefully check all fuel lines and connections for leaks. Repair any fuel leaks before operating the vehicle.**

11. Allow the engine to run for a few minutes to ensure that the fuel lines are full of fuel.
12. Inspect each fuel line for leaks.
    12.1. Check all of the fuel line clamps at the carburetor, fuel filter, fuel pump, and fuel tank for leaks.
    12.2. Inspect each fuel line to ensure that the lines are not cracked, cut, or worn.

FUEL LINES

See General Warnings on page 1-1.

The fuel lines must be properly routed, and all hose clamps must be tight. The fuel lines should be kept clean. **See following WARNING.**

⚠ WARNING

- **Make sure fuel lines are the correct length and are properly routed. Failure to heed this warning could result in a fire due to damaged fuel lines.**

- Fuel line (9) runs directly from the fuel tank to the fuel filter (7). The fuel filter has an arrow indicating fuel flow direction **(Figure 16-11, Page 16-13)**.
- Fuel line (10) runs directly from the fuel filter to the fuel inlet of the fuel pump.
- Fuel line (13) runs directly from the fuel outlet of the fuel pump to the carburetor.

Small spring steel band clamps are used on all hose connections except at the carburetor. A screw band clamp (15) should be used at the carburetor.

FUEL SHUT-OFF VALVE

See General Warnings on page 1-1.

The fuel shut-off valve is located on top of the fuel tank. The fuel shut-off valve should always be turned to the closed (OFF) position during vehicle storage, towing or trailering **(Figure 16-15, Page 16-21)**. Unless the engine will be run as part of a procedure, the fuel shut-off valve should also be closed (OFF) before performing maintenance or service procedures.

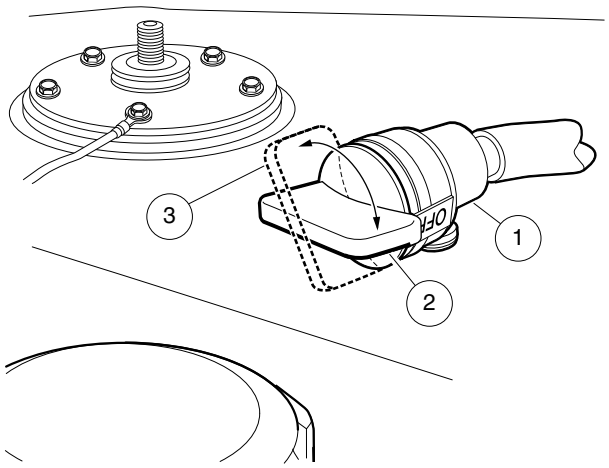

1. Fuel Shut-off Valve 2. Closed (OFF) 3. Open (ON)
NOTE: When selecting valve position, ensure that it is fully opened or fully closed.

1306

Figure 16-15 Fuel Shut-off Valve

FULLY OPEN POSITION

The valve's open position differs from standard valve configurations. For the valve to be fully open, it must be turned approximately 120° from the closed (OFF) position (until it cannot be turned any further). If the valve becomes partially closed, the engine will not run properly due to fuel starvation **(Figure 16-15, Page 16-21)**.

CARBON CANISTER (IF EQUIPPED)

⚠ WARNING

- **If the carbon canister is damaged, only use an OEM (Club Car) replacement that is specifically designed and approved for use on this vehicle. Do not attempt to repair it. See the following canister removal procedure.**

CARBON CANISTER REMOVAL

1. Disable the vehicle. **See Disabling the Vehicle on page 1-3.**
2. Raise or remove seat bottom from vehicle.
3. Remove hose clamps (1), securing three hoses (2, 3 and 4) to canister (5), and disconnect hoses **(Figure 16-16, Page 16-22)**.
4. Push or pull canister from mounting bracket (6).

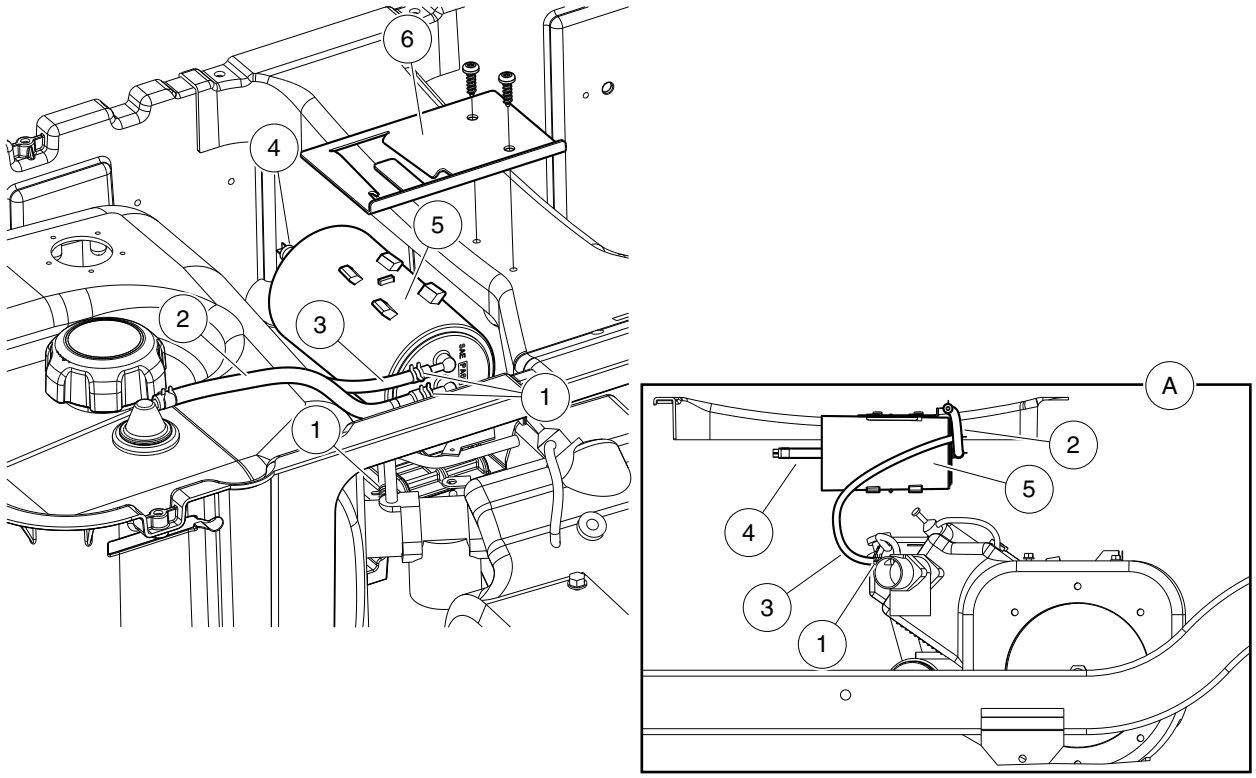

Detail A: Side View

1. Clamp 2. Molded Vent Tube (Fuel Tank to Canister) 3. Vent Tube (Canister to Engine) 4. Vent Tube (Canister to Atmosphere) 5. Carbon Canister 6. Mounting Bracket

2447

Figure 16-16 Carbon Canister, Hoses and Routing

CARBON CANISTER INSTALLATION

1. Align canister mounting tabs with slots in mounting bracket (6) and push canister (5) into bracket **(Figure 16-16, Page 16-22)**. Force it in until fully seated.
2. Attach hoses (2, 3 and 4) to appropriate locations on carbon canister and secure with hose clamps (1).
3. Install and/or lower seat bottom.

⚠ DANGER

- **See General Warnings on page 1-1.**

⚠ WARNING

- **See General Warnings on page 1-1.**

MUFFLER

MUFFLER REMOVAL

⚠ WARNING

- **Hot! Do not attempt to service hot engine or exhaust system. Failure to heed this warning could result in severe burns.**

1. Disconnect battery and spark plug wire(s). **See Disconnecting the Battery – Gasoline Vehicles on page 1-3.**
2. Remove the muffler clamp (6) from the muffler (1) and clamp bracket (2) **(Figure 17-1, Page 17-2)**.
3. Remove the hex-head cap screw (7), lock washer (8), and flat washer (9) from mounting bracket. Retain the governor cable bracket (13).
4. Remove the hex nuts (10) and lock washers (11) from the manifold.
5. Remove the muffler (1) from the vehicle.

MUFFLER INSTALLATION

NOTE: *Any time the muffler is removed from the vehicle, install a new muffler clamp (6) (P/N 1017689) and muffler gasket (12) (P/N 1015330)* ***(Figure 17-1, Page 17-2)****.*

1. Loosely secure muffler (1) to muffler bracket (2) with clamp (6).
2. Place a new gasket (12) on the cylinder block exhaust stud bolts.
3. Attach muffler manifold with lock washers (11) and hex nuts (10) and finger tighten.
4. Loosely secure muffler (1), mounting bracket, and governor cable bracket (13) using hex-head cap screw (7), lock washer (8), and flat washer (9).
5. Tighten manifold hex nuts (10) to 11 ft-lb (14.9 N·m).
6. Tighten the hex cap screw (7) to 14 ft-lb (18.9 N·m).
7. Tighten the muffler clamp (6) to 40 in-lb (4.5 N·m).

NOTE: *Removing and installing the governor cable bracket may change the RPM setting.* ***See Engine RPM Adjustment on page 16-8.***

8. Connect battery and spark plug wire(s). **See Connecting the Battery – Gasoline Vehicles on page 1-3.**

9. Place the Forward/Reverse handle in the NEUTRAL position and the neutral lockout cam in the MAINTENANCE position **(Figure 18-1, Page 18-2)**. Start the engine and check for exhaust leaks and proper engine operation. **See following DANGER.**

⚠ DANGER

- **Do not operate gasoline vehicle in an enclosed area without proper ventilation. The engine produces carbon monoxide, which is an odorless, deadly poison.**

10. Return the neutral lockout cam to the OPERATE position **(Figure 18-2, Page 18-2)**.

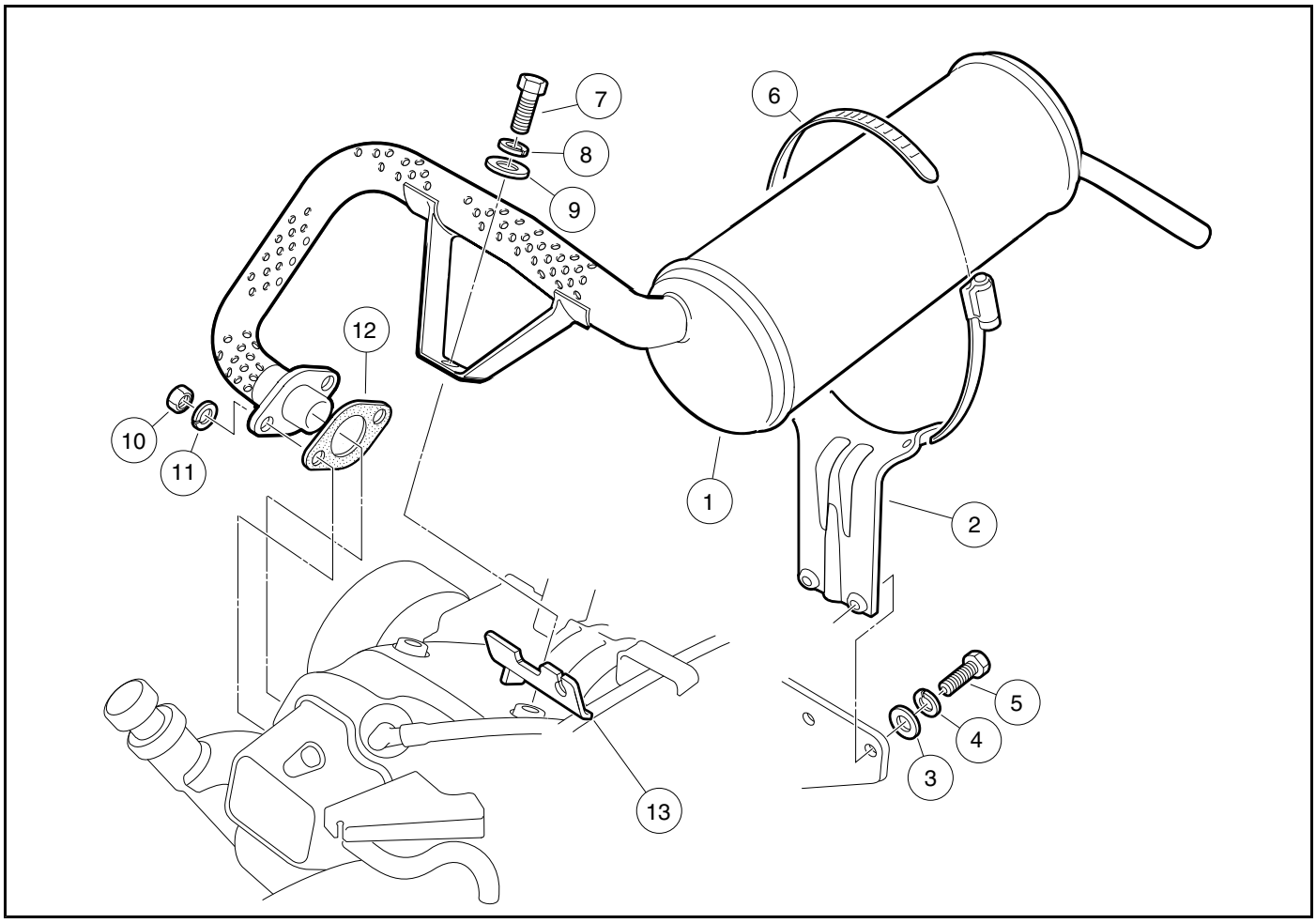

550

Figure 17-1 Exhaust System

⚠ DANGER

- **See General Warnings on page 1-1.**

⚠ WARNING

- **See General Warnings on page 1-1.**

GENERAL INFORMATION

The vehicles addressed in this manual are equipped with heavy-duty, fully-synchronized Unitized Transaxles. The unitized transaxle utilizes fully-synchronized internal gearing to change vehicle direction. Because the unitized transaxle is used to reverse vehicle direction, the engine, drive clutch, belt, and driven clutch rotate in the same direction; therefore, the engine and clutches are not subjected to reversing loads. This reduces maintenance requirements on the engine and clutches. With the unitized transaxle, power is transferred from the engine through the drive clutch, the drive belt, the driven clutch, and then through the unitized transaxle to the wheels.

This section contains information for removing and replacing the unitized transaxle. For complete instruction on unitized transaxle disassembly, repair, rebuilding, and reassembly, see the Engines and Drivetrain Components, Repair and Rebuild Manual (P/N 102396501).

SHIFTER LEVER

A shifter lever, connected to a shifter arm, is used to change the gears to one of three shift positions: FORWARD (F), NEUTRAL (N), or REVERSE (R) **(Figure 18-3, Page 18-2)**. Bring the vehicle to a complete stop before changing FORWARD or REVERSE direction.

NEUTRAL LOCKOUT

During normal vehicle operation, the neutral lockout feature prevents the engine from running when the Forward/Reverse handle is in the NEUTRAL position. If a vehicle is started in FORWARD or REVERSE and then shifted to NEUTRAL, the engine will stop running.
For the convenience of the trained technician, there is a neutral lockout cam (yellow knob) located on the back of the Forward/Reverse shifter, inside the engine compartment. If the neutral lockout cam is pulled out approximately 3/8 inch (10 mm) and then rotated one-half turn until it snaps into place, the cam will be in the MAINTENANCE position **(Figure 18-1, Page 18-2)**. When the switch is in the MAINTENANCE position, it will allow the technician to run the engine in the NEUTRAL position to perform certain maintenance and/or repair functions. With the cam in this position, the vehicle will not operate if the Forward/Reverse handle is placed in either the FORWARD or REVERSE position. **See following WARNING and NOTE.**

⚠ WARNING

- **With the cam in the MAINTENANCE position and the engine running, the vehicle may move suddenly if the Forward/Reverse handle is shifted or accidentally bumped. To prevent this, chock the front and rear wheels and firmly set the park brake before servicing or leaving the vehicle.**

NOTE: *Be sure to return the cam to the OPERATE position* ***(Figure 18-2)*** *after servicing the vehicle, or it will not run with the Forward/Reverse handle in either the FORWARD or REVERSE position.*

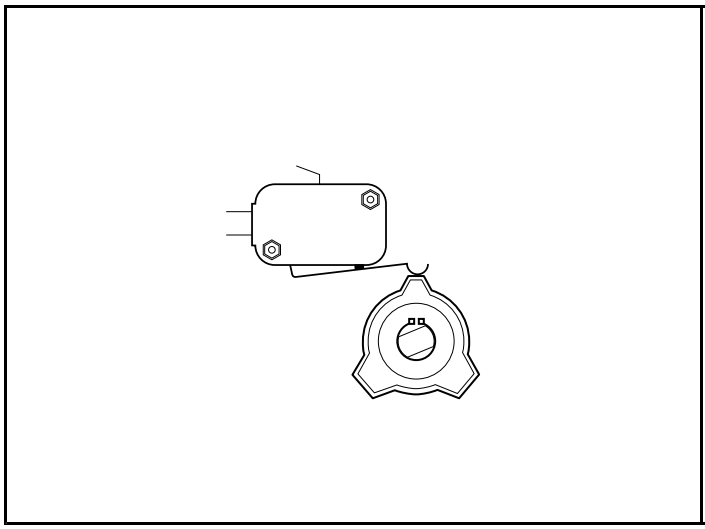

8
Figure 18-1 Neutral Lockout – Maintenance

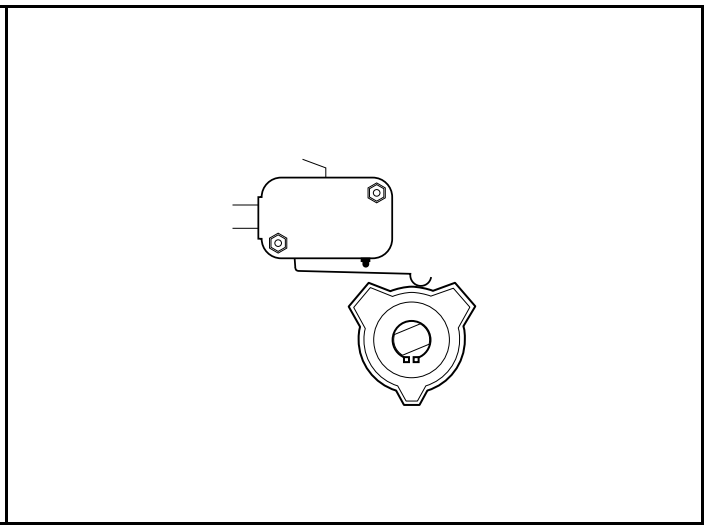

9
Figure 18-2 Neutral Lockout – Operate

GOVERNOR SYSTEM

The governor system regulates vehicle ground speed. It is mounted inside the unitized transaxle and is driven by transaxle gears. If any of the governor linkages are removed in order to service other components, readjustment of the governor linkage is required. **See Governor Cable Installation and Adjustment on page 16-6.**

UNITIZED TRANSAXLE SERVICE

The unitized transaxle is extremely durable and should require very little service under normal operating conditions. The only service required is to maintain proper lubricant level. **See Periodic Lubrication Schedules on page 10-3.** Under normal operating conditions, adjustment to the system should not be required.

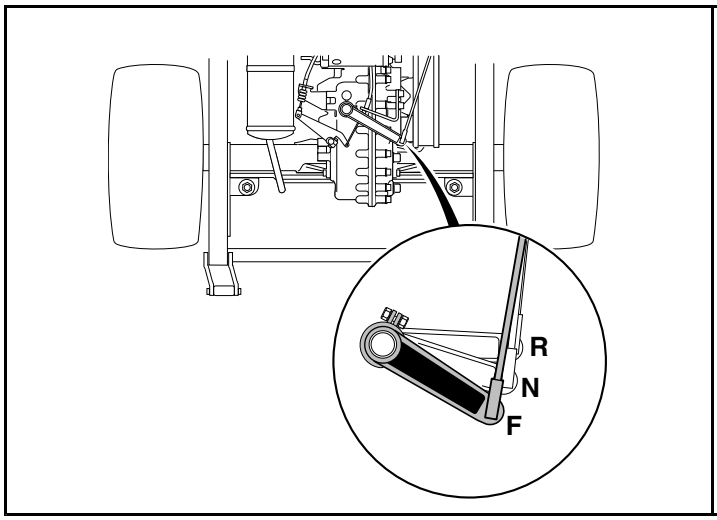

552
Figure 18-3 Shifter Positions (Top View)

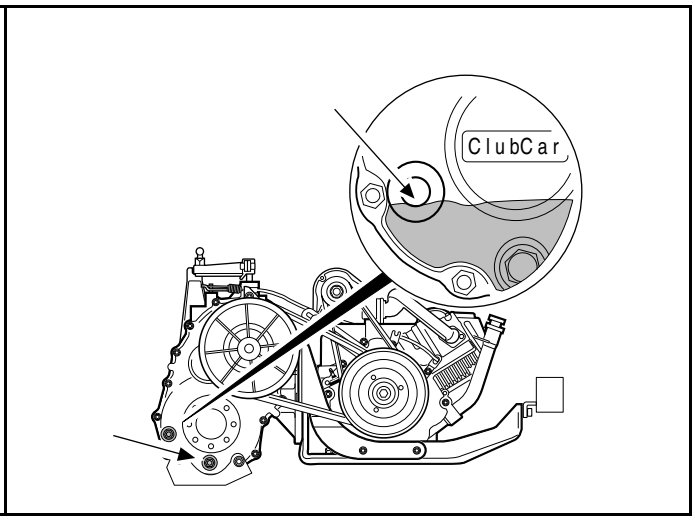

553
Figure 18-4 Lubricant Level (should be level with bottom of hole) and Drain Plug

TOOLS REQUIRED FOR THIS SECTION

Hydraulic floor jack (or chain hoist)	12 to 18 in. straight edge	17 mm socket, 3/8-in. drive
Jack stands (2) (one ton capacity)	Small ball peen hammer (10 oz.)	7/16-in. combination wrench
Hydraulic press	Plastic or rubber mallet	1/2-in. combination wrench
Bench vise	Ratchet wrench, 3/8-in. drive	9/16-in. combination wrench
Standard slip joint pliers	Torque wrench, 3/8-in. drive	11/16-in. combination wrench (2)
External snap ring pliers (.070 in. tip)	3/8-in. Socket, 3/8-in. drive	17 mm combination wrench
External snap ring pliers (.047 in. tip)	7/16-in. Socket, 3/8-in. drive	Small flat blade screwdriver
90° Internal snap ring pliers (.090 in. tip)	10 mm Combination wrench	Medium flat blade screwdrivers (2)
Feeler gauge	1/2-in. Socket, 3/8-in. drive	No. 2 phillips-head screwdriver
16-in. rolling head prybar	9/16-in. Socket, 3/8-in. drive	1/4-in. nut driver
Small punch or scratch awl	5/8-in. Socket, 3/8- in. drive	5/16-in. nut driver
1/4-in. diameter drift or metal rod	12 mm Socket, 3/8-in. drive	Small knife or wire snippers
Bearing puller wedge attachment (P/N 1012812)	Axle seal tool (P/N 1014162)	Governor gear shaft installation tool (P/N 101933101)
10 mm socket, 3/8-in drive	Internal snap ring pliers (P/N 1012560)	Brake cable removal tool (P/N 102555501)
13 mm combination wrench		

LUBRICATION

There are two oil port plugs located on the right (driven clutch) side of the unitized transaxle **(Figure 18-4, Page 18-2)**. When the vehicle is on a level surface, use the upper plug as a lubricant level indicator. Lubricant level should be even with the bottom of level indicator hole. Use the lower plug for draining. When draining lubricant, remove both plugs to allow the lubricant to drain faster. Clean and reinstall the drain plug and gasket before filling the transaxle with new lubricant. Use a funnel when filling the transaxle through the lubricant level indicator hole. Fill with 27 oz. (0.8 liter) 80-90 WT. API class GL or 80-90 WT. AGMA class 5 EP gear lubricant (or until lubricant begins to run out of the level indicator hole). Tighten the plug to 20 ft-lb (27.1 N·m).

AXLE SHAFT

See General Warnings on page 1-1.

Removal of the unitized transaxle is not required for servicing or replacing axle shafts, axle bearings, or axle shaft oil seals. If the unitized transaxle is to be removed from the vehicle, do not remove the wheels, axle shafts, or axle tubes first. Instructions for removing the unitized transaxle from the vehicle begin on page 18-8.

AXLE SHAFT AND OIL SEAL REMOVAL

1. Turn the key switch to the OFF position and remove the key, place the Forward/Reverse handle in the NEUTRAL position, and chock the wheels.
2. Disconnect battery and spark plug wire(s). **See Disconnecting the Battery – Gasoline Vehicles on page 1-3.**
3. Loosen the lug nuts on the wheel to be removed.
4. Place chocks at the front wheels and lift the rear of the vehicle with a floor jack. Then place jack stands under the axle tubes to support the vehicle. **See WARNING "Lift only one end of the vehicle..." in General Warnings on page 1-1.**
5. Remove the rear wheel and brake drum.
6. Use 90° internal snap ring pliers (0.090-in. tip) to remove internal retaining ring (1) from axle tube **(Figure 18-5, Page 18-4)**.
7. Carefully pull the axle shaft (2) straight out of the axle tube **(Figure 18-5, Page 18-4)**.

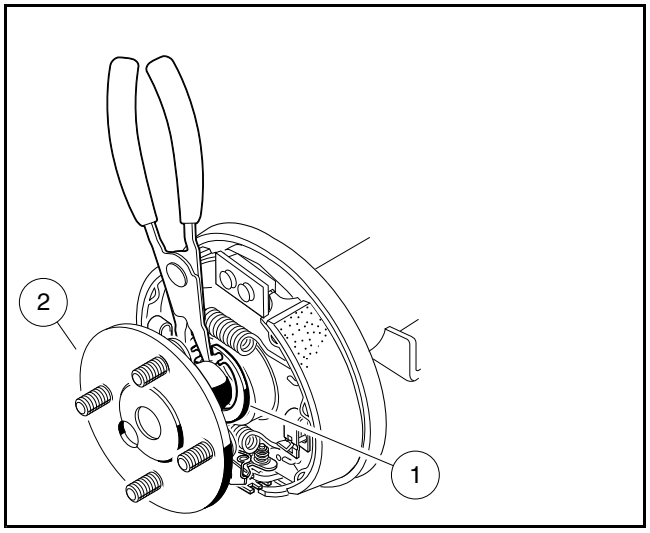

554

Figure 18-5 Retaining Ring

8. Position a 16-inch (40 cm) rolling head prybar **(Figure 18-6, Page 18-5)** under the inside lip of the seal and pull the oil seal out **(Figure 18-7, Page 18-5)**. **See following CAUTION.**

⚠ CAUTION

- **Do not scar or damage the inside surfaces of the tube when removing the oil seal. A damaged tube might have to be replaced.**

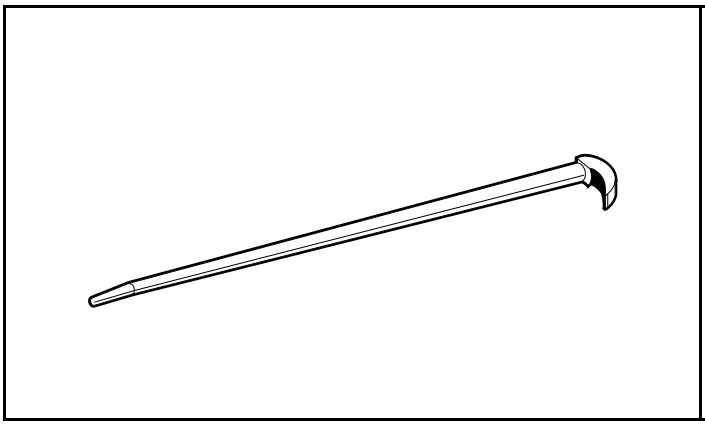

555

Figure 18-6 Rolling Head Prybar

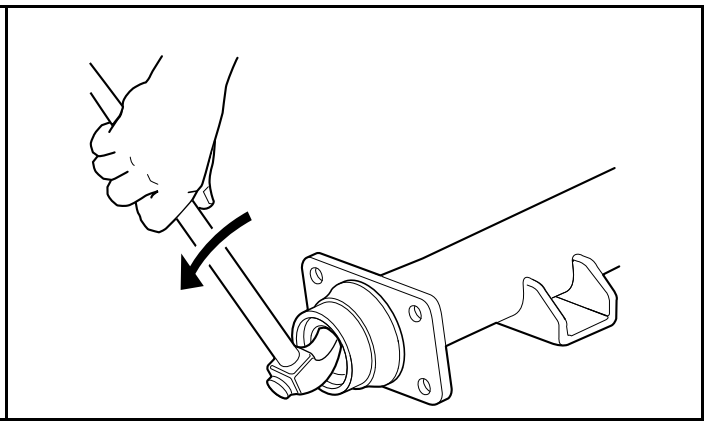

556

Figure 18-7 Seal Lip

9. Inspect the axle shaft assembly to be sure the bearing (71) and collar (73) have not slipped and are still seated against the shoulder on the axle shaft **(Figure 18-8, Page 18-6)**.
10. Inspect the bearing. If the bearing is damaged or worn, replace it.

AXLE BEARING

Axle Bearing Removal

1. Use external retaining ring pliers (0.047-inch tip) to remove the retaining ring (74). Place a bearing puller wedge attachment (P/N 1012812) on the axle shaft between the wheel mounting flange and the bearing **(Figure 18-8, Page 18-6)**. **See also Figure 18-9, Page 18-8.See following CAUTION.**

⚠ CAUTION

- **Do not tighten the bearing puller wedge attachment against the axle shaft. This could damage the axle shaft when pressing the bearing and collar off.**

2. Press the bearing (71) and collar (73) off together **(Figure 18-8, Page 18-6)**. **See also Figure 18-9, Page 18-8. See following NOTE.**

NOTE: *It may be necessary to heat the collar to remove it.*

*Do not remove the large axle retaining ring (70) from the axle **(Figure 18-8, Page 18-6)**. Since the inner diameter of the retaining ring (70) is smaller than the outer diameter of the bearing (71), the ring must be in place on the axle before a new bearing and collar are pressed on.*

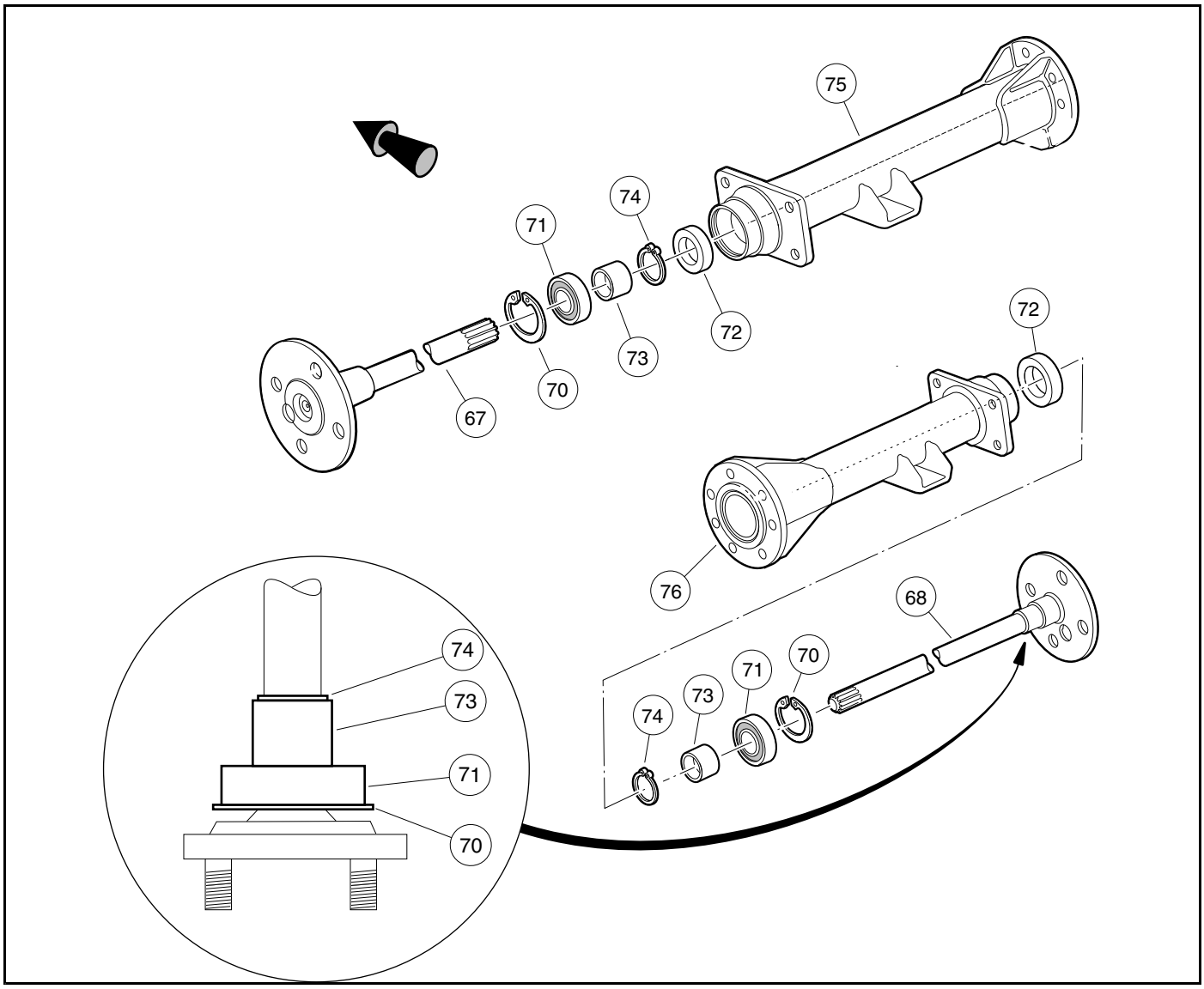

557

Figure 18-8 Differential Gear Case and Axle Tubes

Axle Bearing Installation

1. Ensure that the retaining ring (70) is loosely placed on the axle shaft. **See preceding NOTE.**
2. Install a new axle bearing (71) on axle (67 or 68). Push bearing onto axle until bearing is flush against axle shoulder **(Figure 18-8, Page 18-6)**.
3. Apply two drops of Loctite 271® to inside of the collar. **See following CAUTION.**

⚠ CAUTION

- **Apply Loctite 271 to the inside of the collar only, not to the shaft, so that the Loctite will be pushed away from the bearing as the collar and bearing are pressed on. If Loctite gets on or in the bearing, the bearing must be replaced.**

- **The collar should be removed no more than two times. If a collar is removed a third time, the shaft and collar will not fit properly.**

4. Place a new sealed bearing (71) on shaft (67 or 68) **(Figure 18-8, Page 18-6)**.
5. Install collar (73) onto axle shaft. Place axle assembly on bearing puller wedge attachment and press collar onto axle.
6. Place the bearing puller wedge attachment against collar and press both bearing and collar onto shaft. **See following CAUTION.**

⚠ CAUTION

- **If the bearing was removed from the shaft, replace it with a new one.**
- **Do not tighten the bearing puller wedge attachment against the axle shaft. This could damage the axle shaft when the bearing and collar are pressed on.**

7. Use external snap ring pliers (0.047-in. tip) to install collar retaining ring (74) **(Figure 18-8, Page 18-6)**.

AXLE SHAFT INSTALLATION

1. Clean bearing and seal seats in axle tube (75 or 76) **(Figure 18-8, Page 18-6)**.
2. Place a new oil seal (72) in axle tube with seal lip facing inside of the axle tube **(Figure 18-8, Page 18-6)**. Use an axle seal tool (P/N 1014162) to press it in until it seats firmly in position **(Figure 18-10, Page 18-8)**. **See following NOTE.**

NOTE: *The new seal can be installed by tapping the axle seal tool with a mallet.*

⚠ CAUTION

- **Clean any residual oil from the exposed end of the axle shaft and from the oil seal area prior to installing the axle shaft.**

3. Clean the axle shaft and splines and then insert the shaft, splined end first, through the seal and into the axle tube. Be careful not to damage the seal. Then advance the shaft through the inner bearing and rotate it to align the shaft splines with the splined bore of the differential side gear. Continue advancing the shaft until the bearing seats against the axle tube shoulder.
4. Install the bearing retaining ring (70) in the axle tube **(Figure 18-8, Page 18-6). See also Figure 18-5, Page 18-4.**
5. Place a 1/4 to 3/8-inch (6-10 mm) diameter rod against the retaining ring and tap lightly at four to five locations to ensure it is properly seated. **See following WARNING.**

⚠ WARNING

- **Be sure bearing retaining ring is properly seated in its groove. If ring is not properly installed, the axle assembly will separate from the transaxle and damage the axle assembly and other components. Loss of vehicle control could result in severe personal injury or death.**

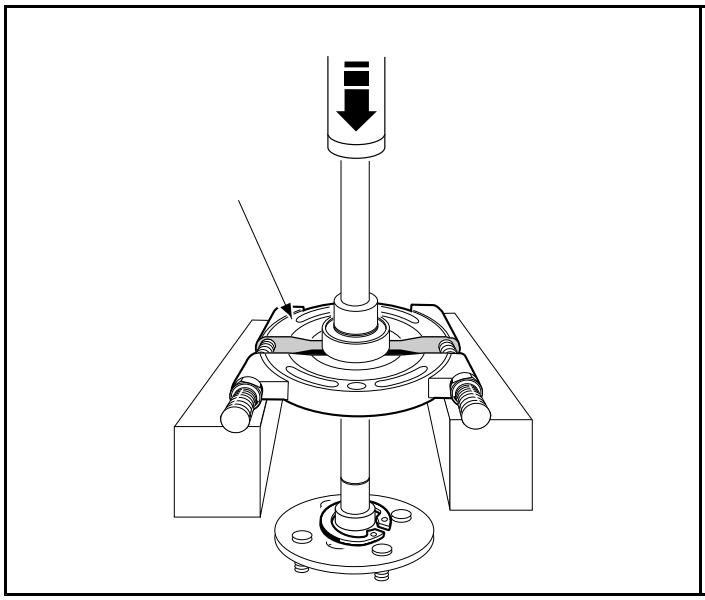

558
Figure 18-9 Press Bearing and Collar From Shaft Using Bearing Puller Wedge Attachment

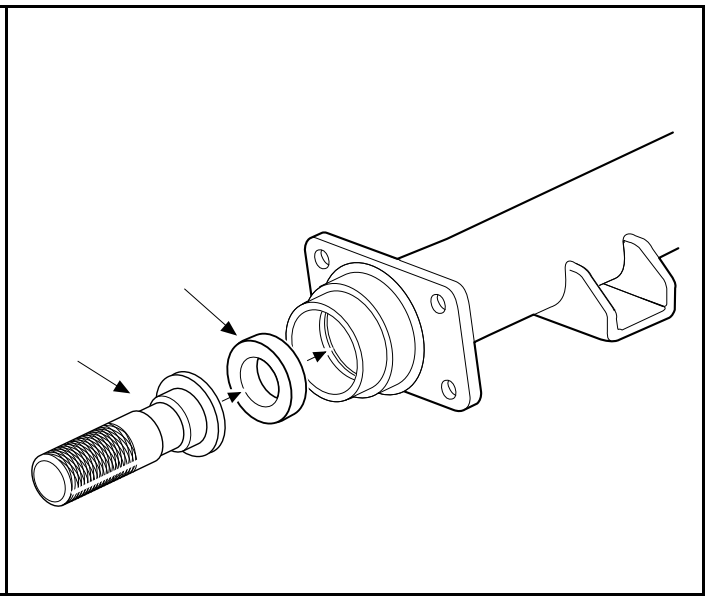

559
Figure 18-10 Axle Seal and Seal Tool

UNITIZED TRANSAXLE REMOVAL

See General Warnings on page 1-1.

1. Turn the key switch to the OFF position and remove the key, and place the Forward/Reverse handle in the NEUTRAL position.
2. Disconnect battery and spark plug wire(s). **See Disconnecting the Battery – Gasoline Vehicles on page 1-3.**
3. Close the fuel shut-off valve on fuel tank **(Figure 16-15, Page 16-21)**.
4. Detach all wires, hoses, etc. connecting the powertrain to the vehicle.
   4.1. Disconnect the carburetor vent tube from the carburetor **(Figure 18-11, Page 18-8)**.
   4.2. Disconnect the air intake hose from the carburetor **(Figure 18-12, Page 18-8)**.

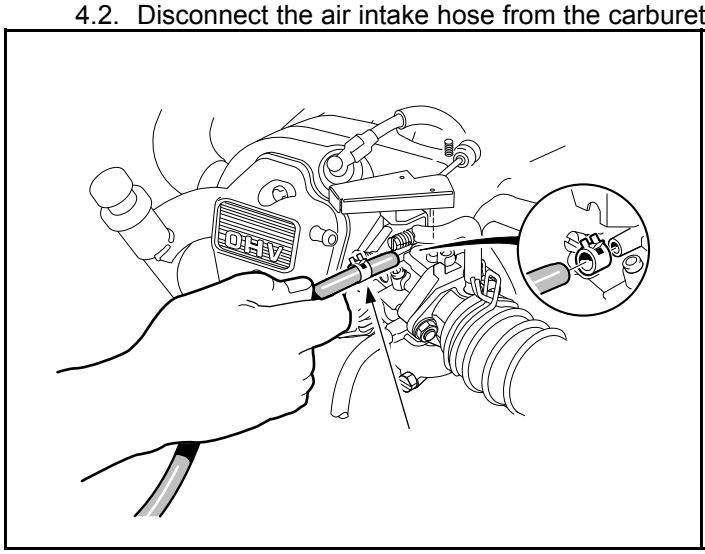

847
Figure 18-11 Carburetor Vent Tube

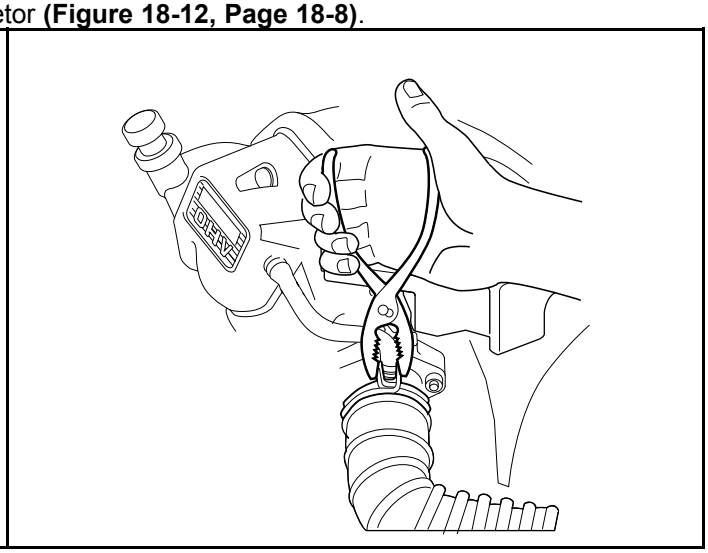

561
Figure 18-12 Air Intake Hose

   4.3. Disconnect impulse line from fuel pump **(Figure 18-13, Page 18-9)**.

4.4. Disconnect fuel line from carburetor. To prevent spilling fuel, the disconnected end of the line can be plugged with a 1/4-inch bolt **(Figure 18-14, Page 18-9)**.

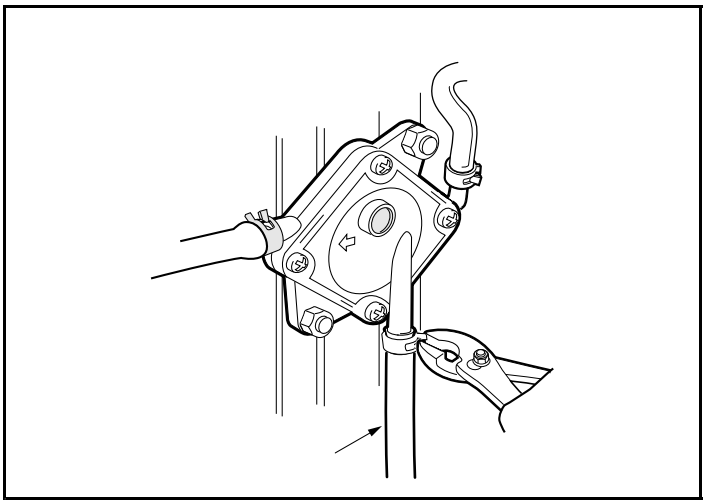

562

Figure 18-13 Impulse Line

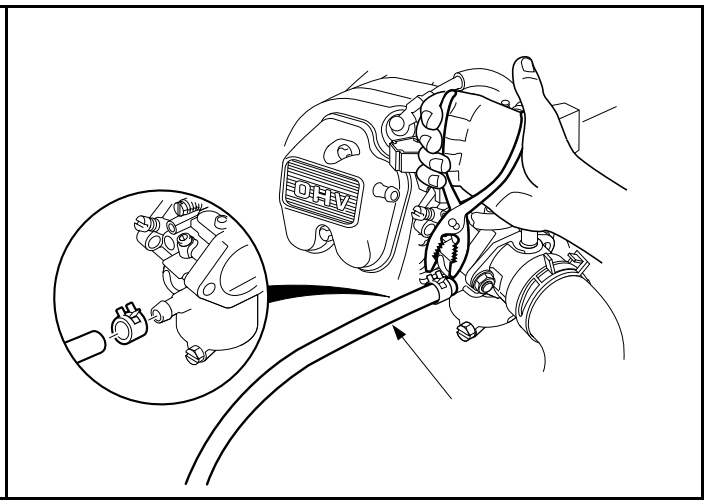

2397

Figure 18-14 Fuel Line

4.5. Disconnect the throttle cable from the pedal group. **See Pedal Group Removal on page 5-7.** Loosen the cable mounting nuts (1) and ensure the cable can move freely through the hole in the frame **(Figure 18-15, Page 18-9)**.

4.6. Remove retaining nut and disconnect the engine ground wire from the oil filler tube mounting bracket **(Figure 18-16, Page 18-9)**.

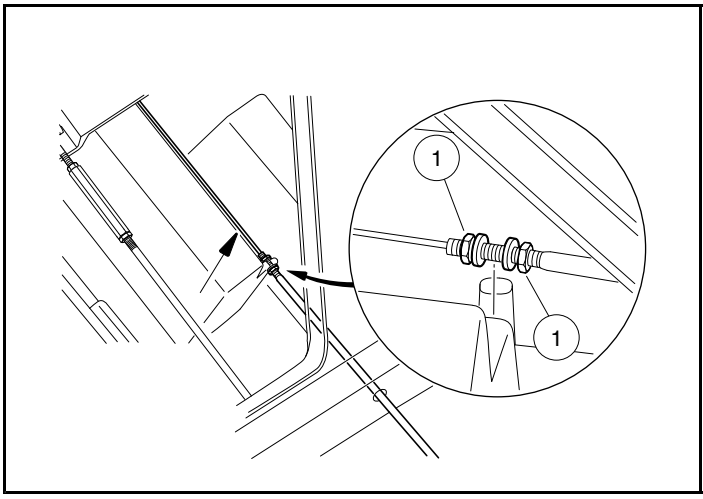

2398

Figure 18-15 Throttle Cable Mounting

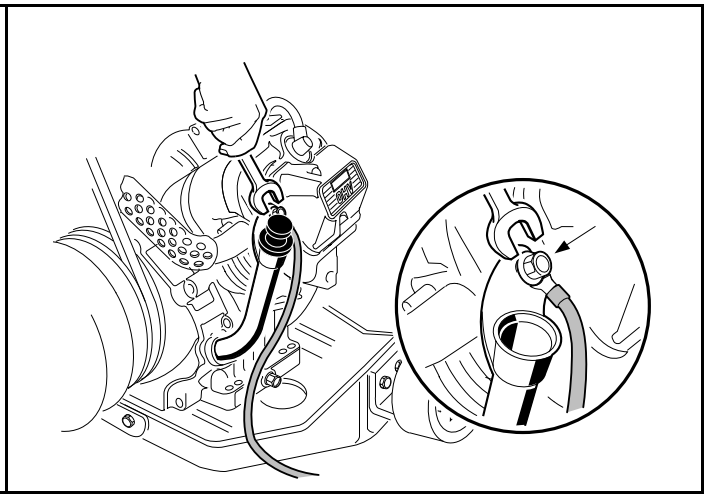

565

Figure 18-16 Engine Ground Wire

4.7. Use a screwdriver or flat blade to snap the shifter cable rod end (1) from the shifter arm (2) on the unitized transaxle. Compress the retaining clips (3) on the cable anchor and push the cable through the shifter bracket **(Figure 18-17, Page 18-10)**.

4.8. Mark for identification and then disconnect the 6-gauge white wire (F2 post), 6-gauge black ground wire (A2 post), and 16-gauge yellow wire (DF post) from starter/generator **(Figure 18-18, Page 18-10)**.

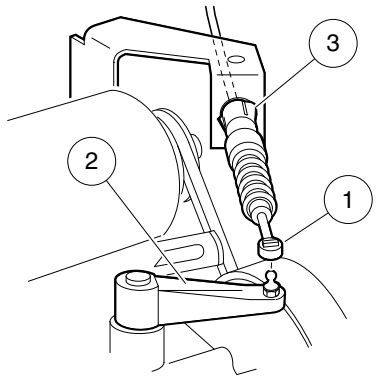

2399
Figure 18-17 Shifter Cable (Top View)

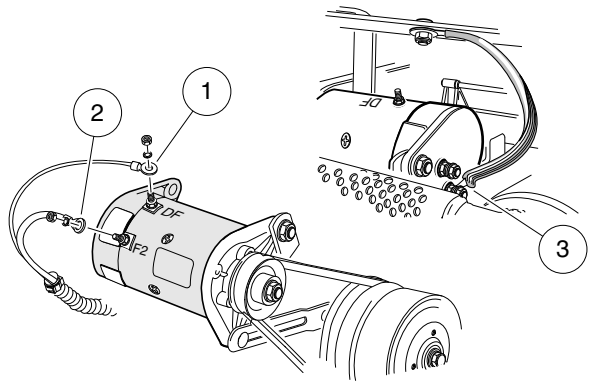

1. Yellow Wire 2. White Wire 3. Ground Wire at A2 Terminal

1350
Figure 18-18 Generator Wires – Model 114-01-4005 shown

4.9. Disconnect the engine oil level sensor wire (18-gauge yellow) at the connector just to the rear of the starter/generator **(Figure 18-19, Page 18-10)**.

4.10. Disconnect the engine kill switch wire (18-gauge white/black) from the bullet connector at the lower right front of the engine **(Figure 18-20, Page 18-10)**.

4.11. Cut away the wire ties securing the engine kill wire at the lower right front of the engine (below the exhaust header), the wire harness at the governor cable bracket, and the wire harness to the plate beneath the muffler.

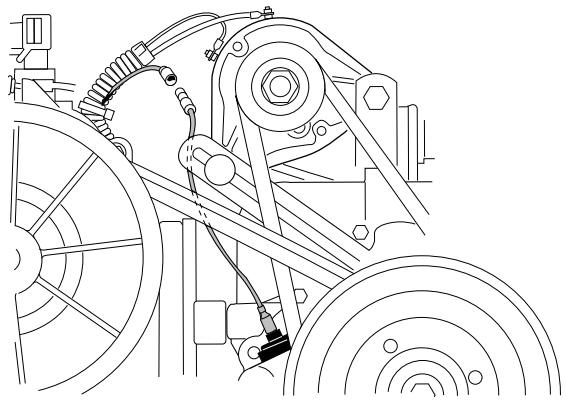

568
Figure 18-19 Oil Level Sensor Jumper Wire

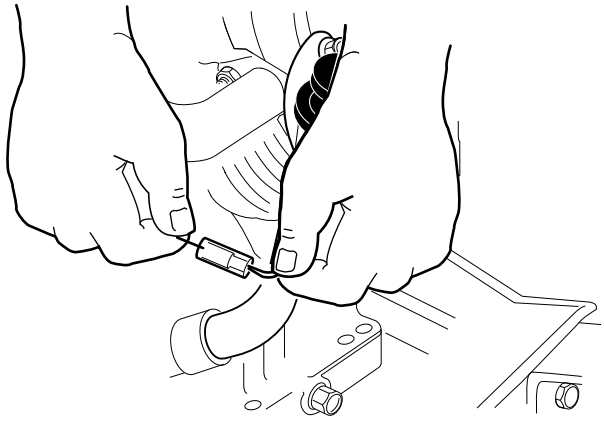

569
Figure 18-20 Ignition Kill Wire

5. Disconnect the brake cables. Remove bow tie locking pins (1) and brake cable clevis pins (2) and using tool (P/N 1025555) compress tangs on cable end and remove cable from bracket (4) **(Figure 18-21, Page 18-11)**.

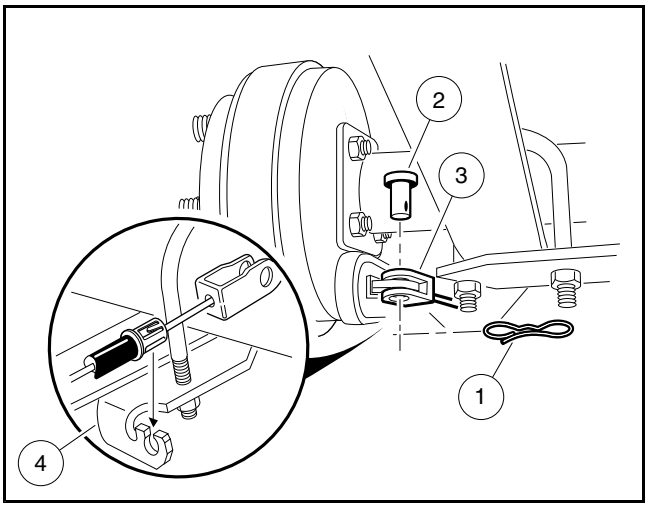

651

Figure 18-21 Brake Cable (Rear View)

6. Remove the lower shock mounting hardware from both rear shocks **(Figure 18-22, Page 18-11)**.
7. Position a floor jack under the rear of the vehicle **(Figure 18-23, Page 18-11)**.

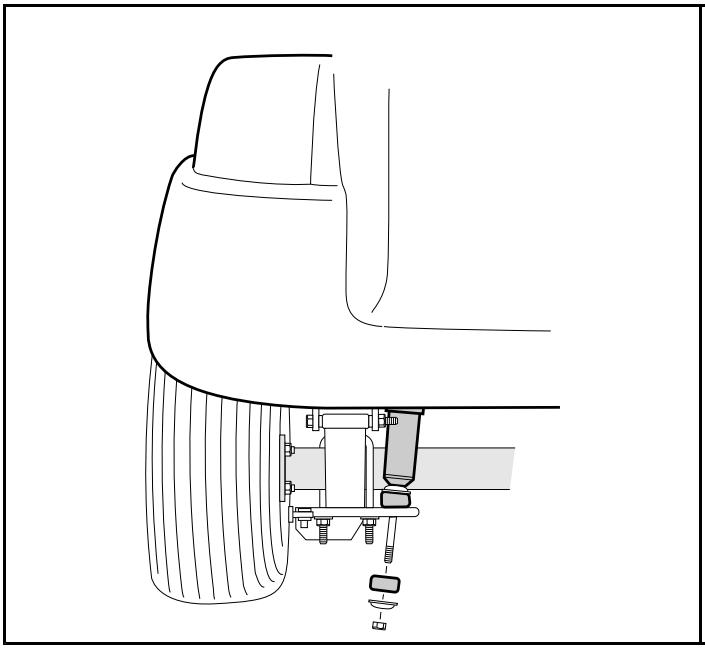

767

Figure 18-22 Shock Absorbers

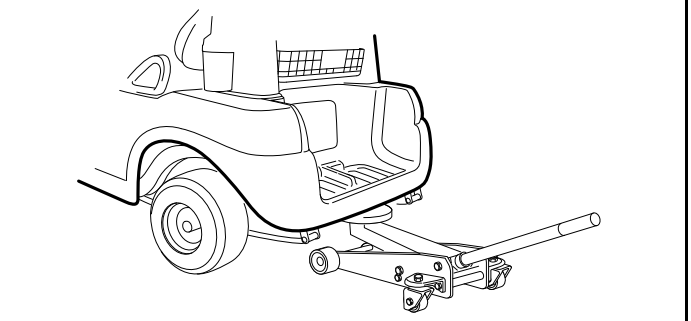

Position floor jack under hitch bracket or frame.

2400

Figure 18-23 Floor Jack Positioned Under Vehicle

8. Raise vehicle just enough to relieve tension from leaf springs, then remove the bolts securing the leaf springs to the shackles **(Figure 18-24, Page 18-12)**.
9. Remove the bolts securing the leaf springs to their front mounts **(Figure 18-25, Page 18-12)**.

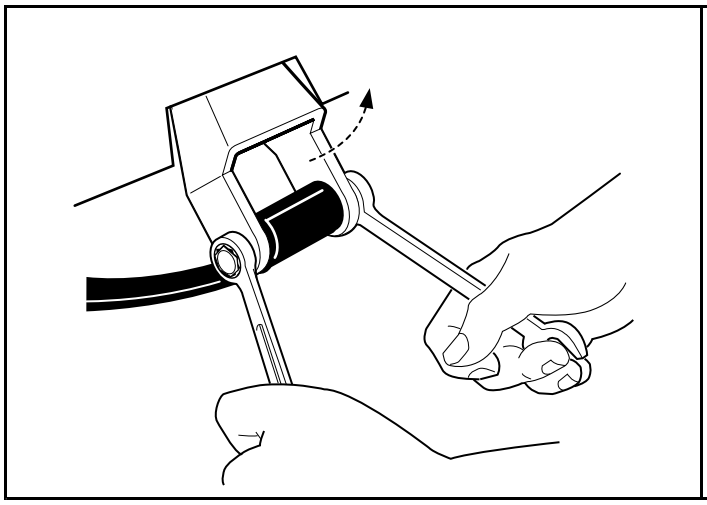

768
Figure 18-24 Rear Shackles

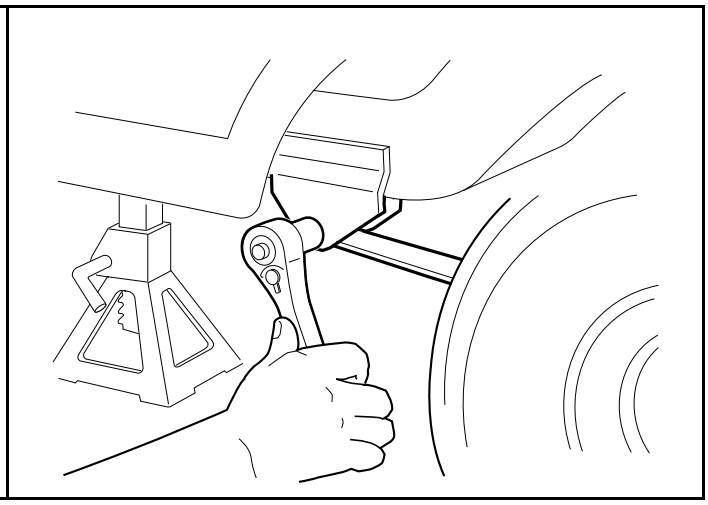

2401
Figure 18-25 Spring Retainer Bolts

10. Continue raising vehicle until frame is higher than the top of the unitized transmission (enough to allow transaxle and engine to be rolled under and out of vehicle) **(Figure 18-26, Page 18-12)**.
11. Position jack stands, adjusted to support the vehicle at this height, under the aluminum frame rails forward of the spring mounts. Lower the floor jack to allow the jack stands to support the vehicle **(Figure 18-27, Page 18-12)**.

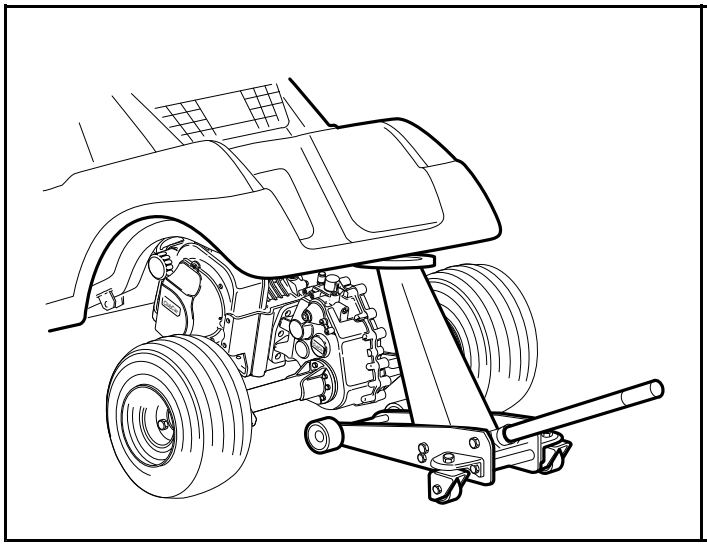

2402
Figure 18-26 Raise Vehicle

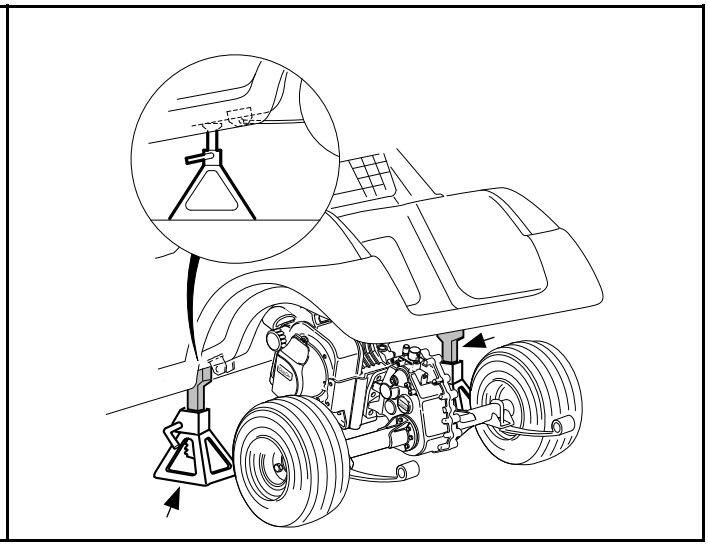

2403
Figure 18-27 Position Jack Stands On Both Sides of Frame

12. Pull the floor jack from beneath the vehicle and move it away.
13. Carefully lift the snubber (1) out of the snubber bracket (2) in the vehicle frame and lower it to the floor **(Figure 18-28, Page 18-13)**. The powertrain should be completely disconnected from the vehicle and resting on the floor.
14. Grasp the ends of the leaf springs at the rear of the vehicle and roll the powertrain out from under the vehicle **(Figure 18-29, Page 18-13)**.

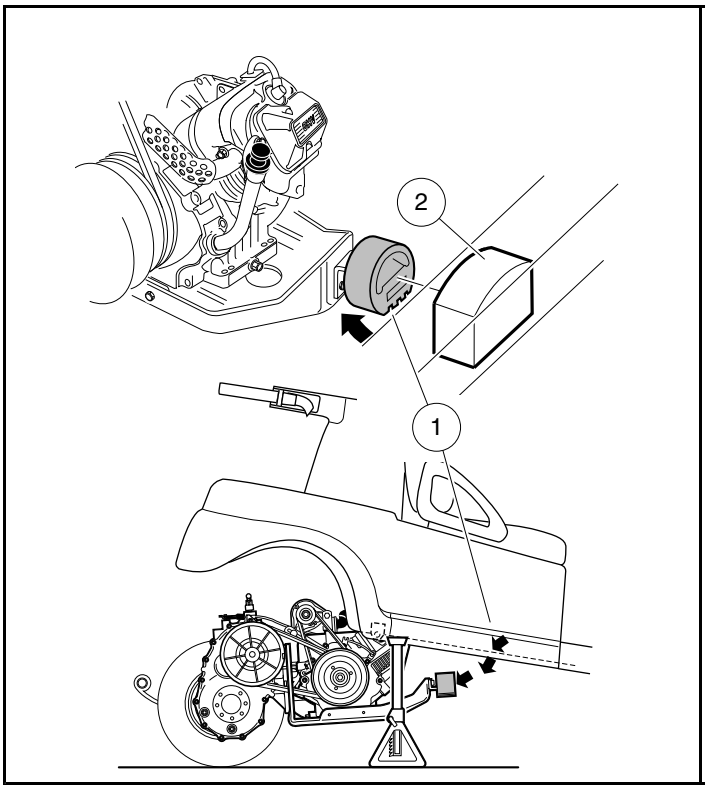

2404
Figure 18-28 Snubber and Bracket

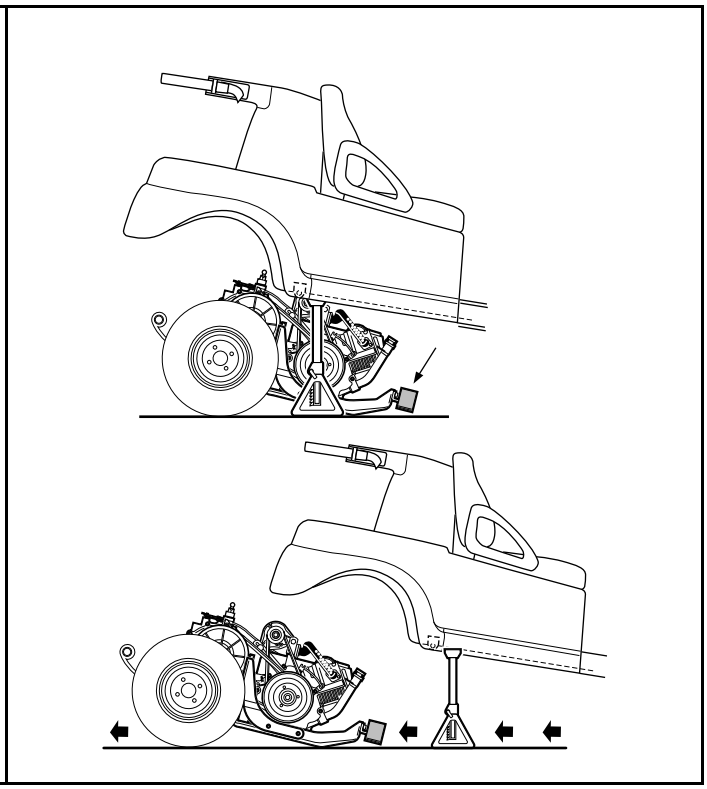

2405
Figure 18-29 Remove Powertrain

15. Place blocks under the engine pan so they will completely support the engine and keep it **level to the floor (Figure 18-30, Page 18-13)**. **See following NOTE.**

NOTE: *Place the blocks so they will support the engine when the transaxle is detached and moved away from the engine.*

16. Remove the drive belt.
    16.1. Grasp belt midway between drive and driven clutch and pull up on belt to force the driven clutch sheaves apart. Roll the belt counterclockwise while pulling it off driven clutch **(Figure 18-31, Page 18-13)**.

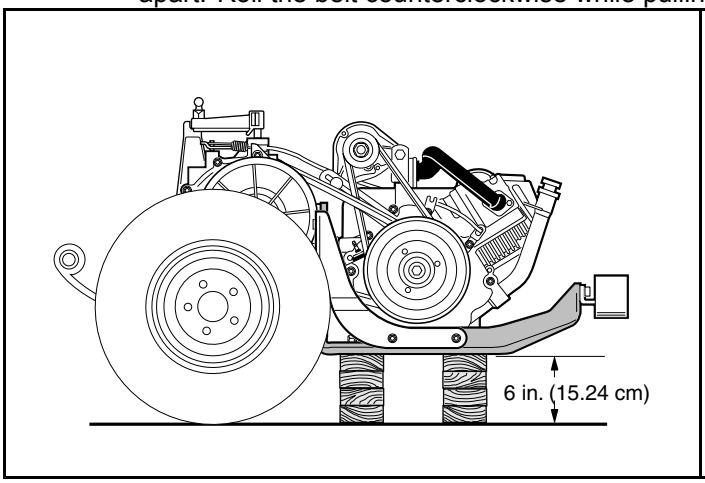

579
Figure 18-30 Position Powertrain on Wood Blocks

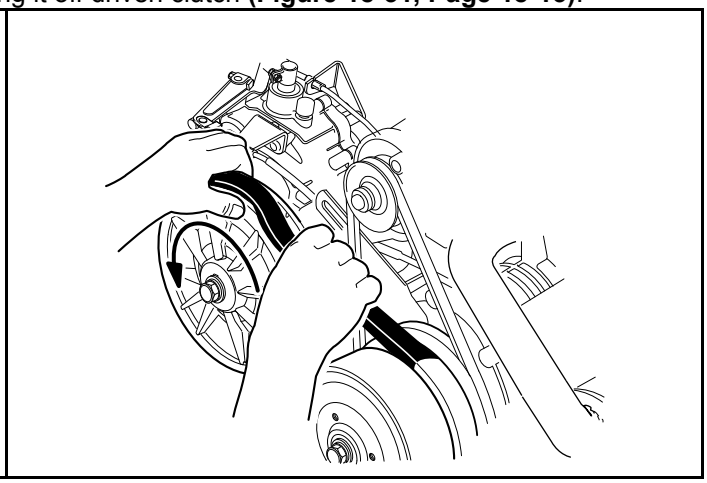

580
Figure 18-31 Remove Drive Belt

17. Remove the driven clutch retaining bolt and remove the driven clutch from the unitized transaxle **(Figure 18-32, Page 18-14)**.

18. Loosen, but do not remove, the governor arm retaining bolt (1) **(Figure 18-33, Page 18-14)**. Remove the governor arm from the shaft. Do not disconnect cables.

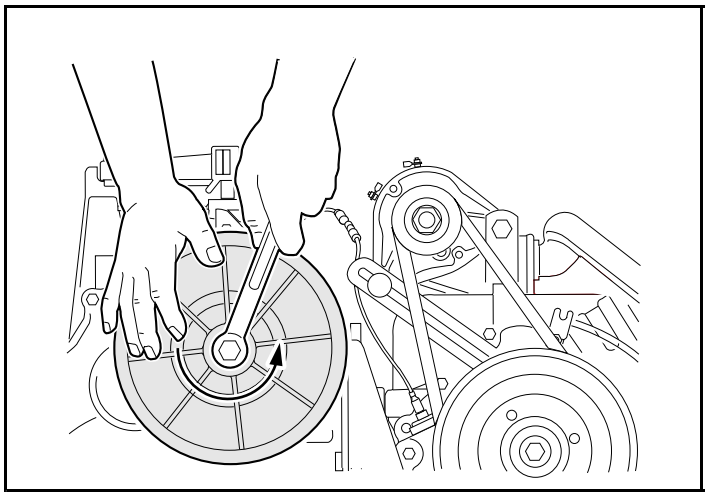

581

Figure 18-32 Driven Clutch

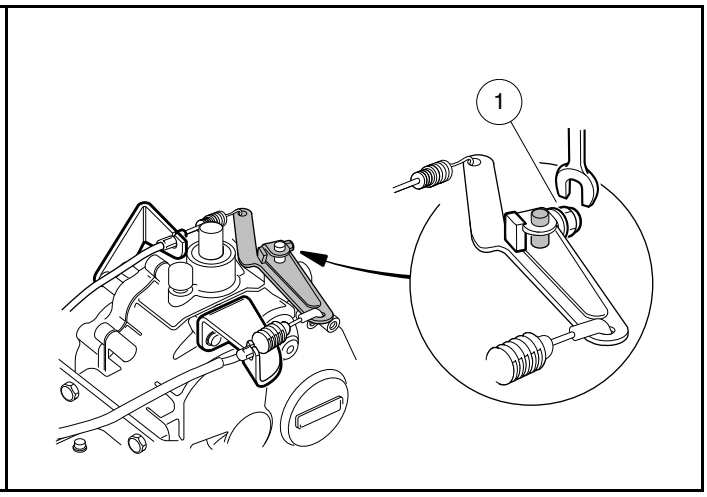

582

Figure 18-33 Governor Arm

19. Remove screws (1) securing the governor cable bracket to transaxle **(Figure 18-34, Page 18-14)**.
20. Remove screws (1) securing the accelerator cable bracket to transaxle **(Figure 18-35, Page 18-14)**.

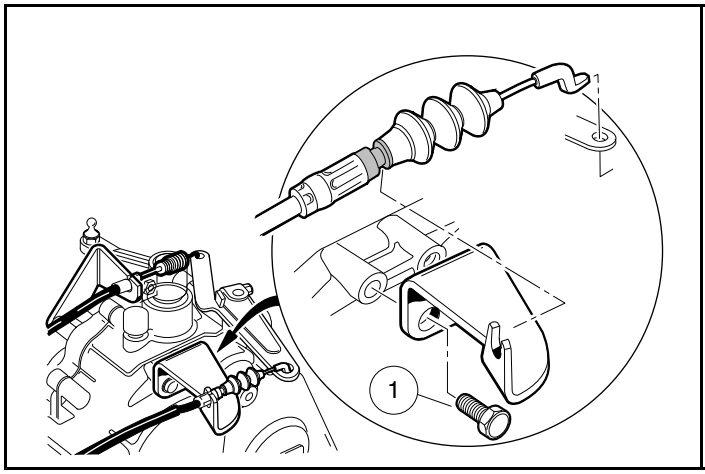

2406

Figure 18-34 Governor Cable Bracket

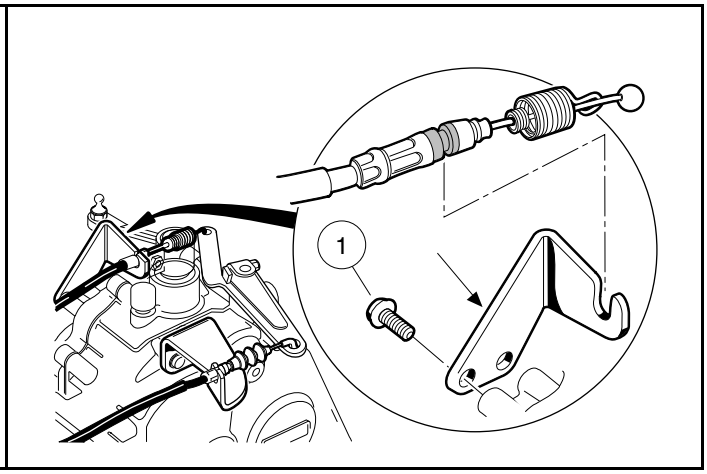

2407

Figure 18-35 Accelerator Cable Bracket

21. Remove the six bolts mounting the unitized transaxle to the engine.
    - 21.1. Remove four transaxle mounting bolts and flat washers (one at each corner of the transaxle mounting plate) **(Figure 18-36, Page 18-15)**.
    - 21.2. Remove two middle transaxle mounting nuts from the engine block studs.
22. Remove leaf springs, wheels and brake assemblies from the transaxle.

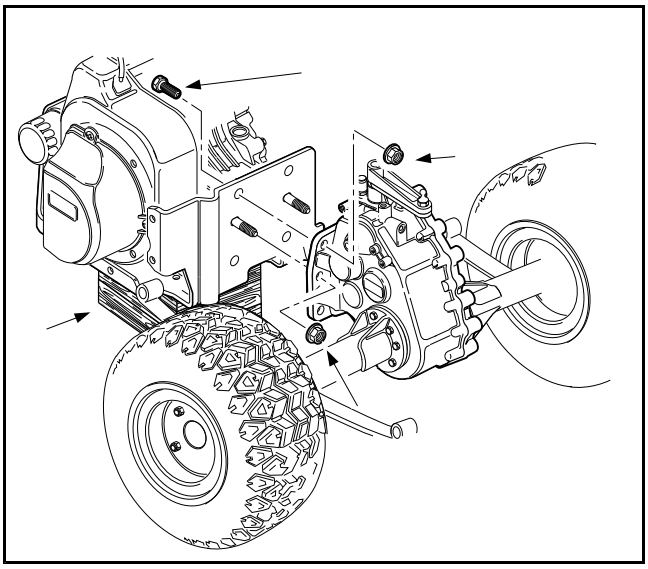

585

Figure 18-36 Transaxle Mounting

UNITIZED TRANSAXLE INSTALLATION

See General Warnings on page 1-1.

1. Install the wheels. **See Wheel Installation, Section 8, Page 8-1.**
2. Install the leaf springs. **See Rear Suspension on page 9-1.**
3. Position the transaxle mounting plate on the two mounting studs at the rear of the engine, and then install the two mounting nuts finger tight **(Figure 18-37, Page 18-16)**.
4. Install the remaining four mounting bolts, four flat washers, and four nuts (one bolt and nut at each corner of the mounting plate) finger tight.
5. Tighten the four corner nuts (with bolts) to 23 ft-lb (31.2 N·m). Tighten the two center nuts (on the engine block studs) to 17 ft-lb (23.1 N·m) **(Figure 18-37, Page 18-16)**.
6. Install the accelerator cable bracket on transaxle case. Tighten the mounting screws to 134 in-lb (15.1 N·m) **(Figure 18-35, Page 18-14)**.

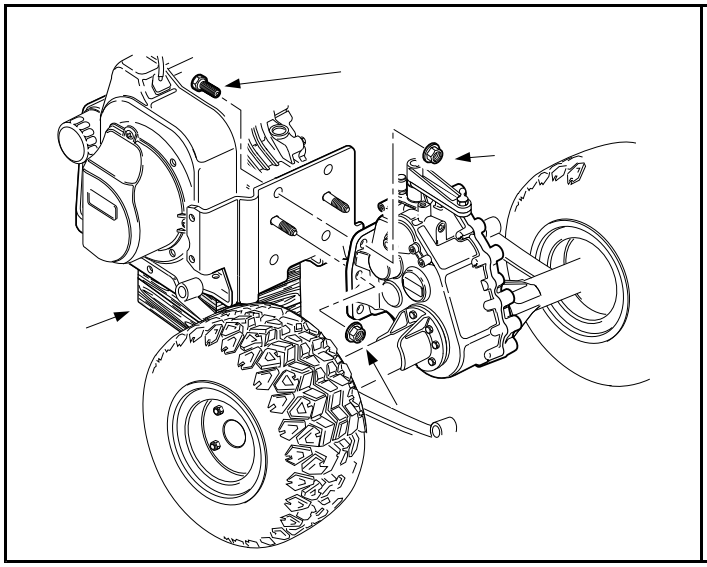

585

Figure 18-37 Transaxle Mounting

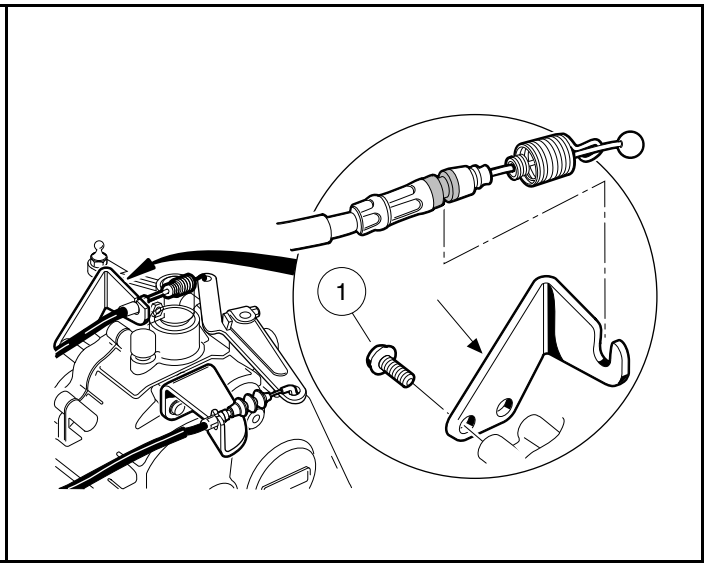

2407

Figure 18-38 Governor Arm

7. Install the governor cable bracket on transaxle case. Tighten the mounting screws to 134 in-lb (15.1 N·m) **(Figure 18-34, Page 18-14)**.
8. Install governor lever arm on governor shaft **(Figure 18-38, Page 18-16)**.
   8.1. With the governor lever arm loose on the governor shaft, turn the governor arm shaft counterclockwise until it stops. Then pull the governor lever arm rearward until the carburetor throttle is in the “wide open throttle” (WOT) position **(Figure 18-38, Page 18-16)**.
   8.2. While holding the arm and shaft in the fully counterclockwise position, tighten the governor arm lever nut to 35 in-lb (4.0 N·m) **(Figure 18-38, Page 18-16)**.
9. Install the key onto the input shaft **(Figure 18-39, Page 18-17)**.
10. Position the driven clutch on the transaxle input shaft and install the washer (yellow side facing out) and mounting bolt. Tighten the mounting bolt to 14 ft-lb (19.0 N·m) **(Figure 18-39, Page 18-17)**.
11. Install the drive belt. **See Drive Belt Installation, Section 19, Page 19-3.**
12. Remove the blocks from under the engine and roll the powertrain into position under the vehicle. Then lift the front of the powertrain and place the snubber into the snubber bracket in the vehicle frame **(Figure 18-40, Page 18-17)**.

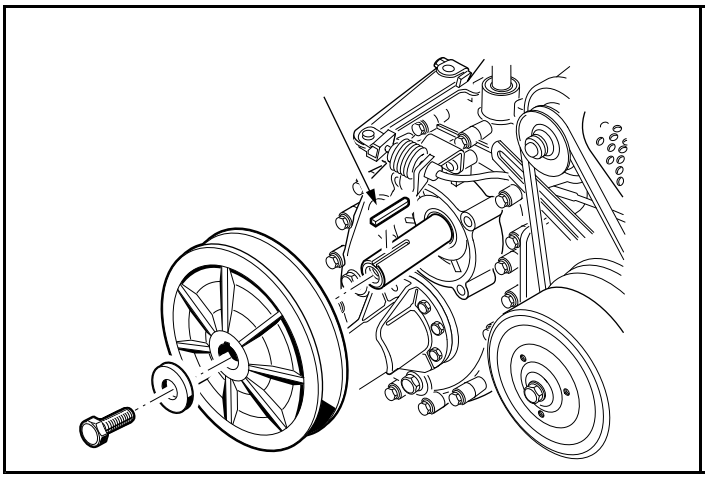

587

Figure 18-39 Driven Clutch and Key

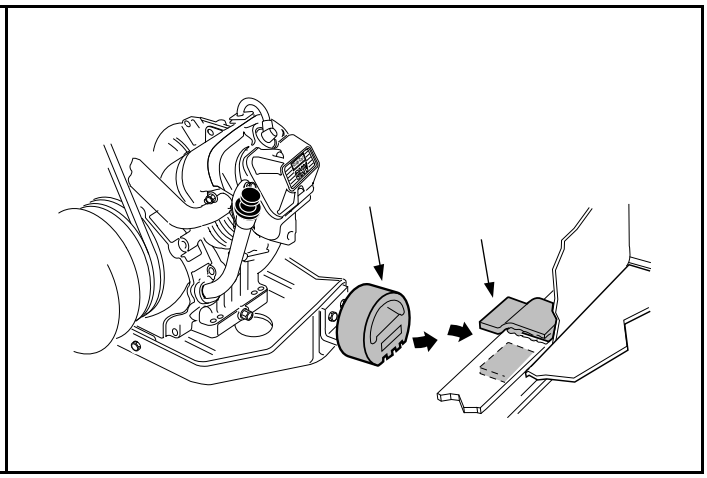

588

Figure 18-40 Snubber and Bracket

13. Position the floor jack under the rear frame crossmember and raise the jack high enough to support the vehicle **(Figure 18-41, Page 18-17)**. Make sure the vehicle is stable on the jack, then remove the jack stands.
14. After the jack stands are removed, lower the vehicle to approximately its normal height. Position the leaf springs in the front spring mounts and install the bolts and lock nuts. Ensure the brackets on the brake cables are placed over the bolts before the lock nuts are installed. Tighten to 15 ft-lb (20.3 N·m).
15. Adjust the vehicle height with the floor jack to position the leaf springs for mounting in the shackles. Install the mounting bolts and lock nuts **(Figure 18-42, Page 18-17)**. Tighten lock nuts to 27 ft-lb (36.6 N·m).

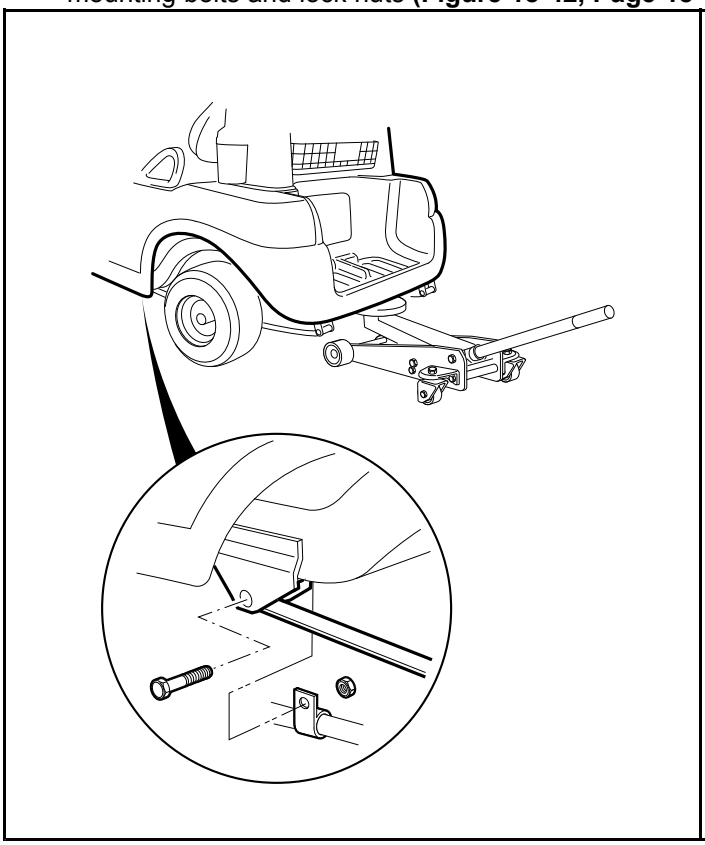

2409

Figure 18-41 Leaf Springs

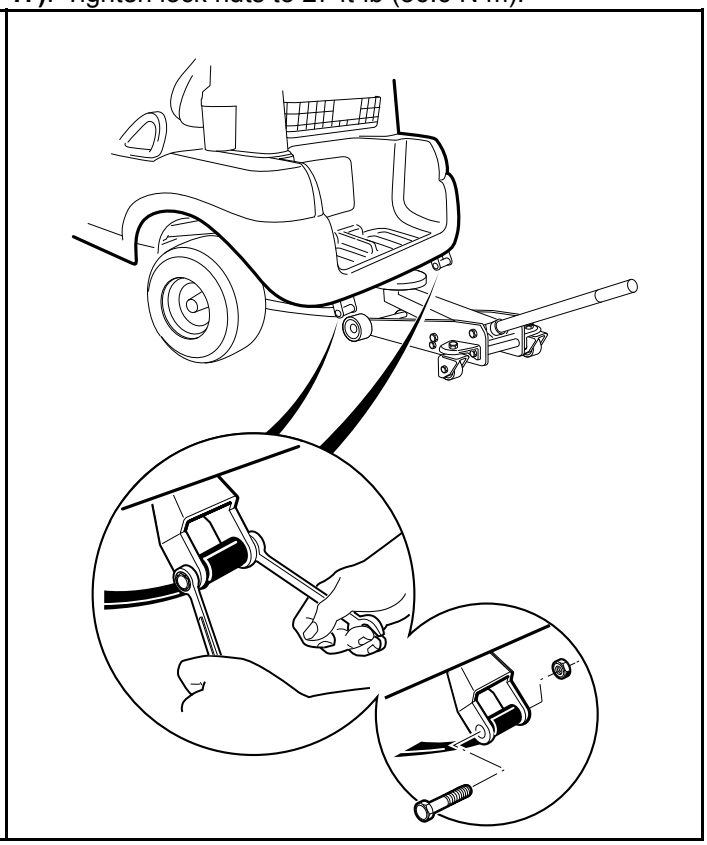

2410

Figure 18-42 Leaf Springs and Shackles

16. Position shocks in the shock mounts and install cushions, mounting washers and nuts **(Figure 18-43, Page 18-18)**. Tighten nuts until cushions expand to be the same diameter as the mounting washers.

17. Connect brake cables. **See Brake Cable Installation on page 6-14.**
18. Route the engine kill switch wire (18-gauge white/black) through the same retainers that hold the accelerator cable. Connect the wire to the bullet connector at the lower right front of the engine **(Figure 18-44, Page 18-18)**.

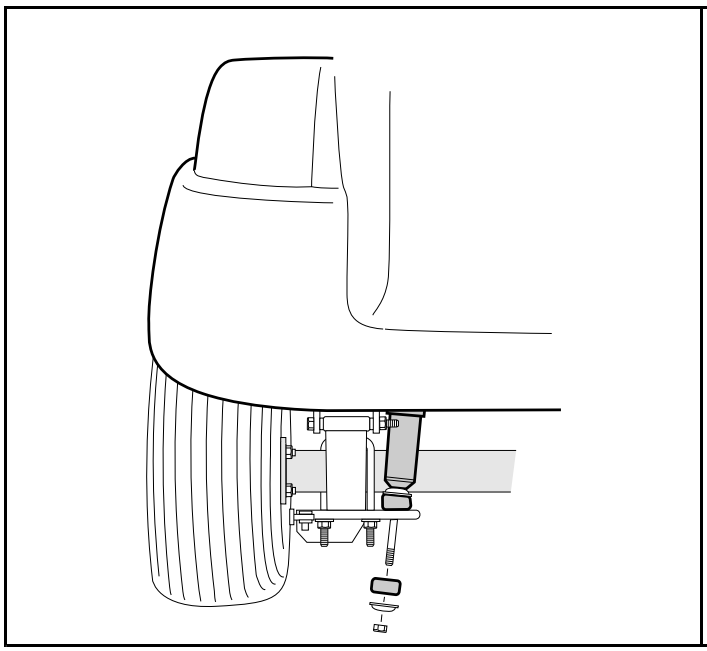

767
Figure 18-43 Shock Absorber

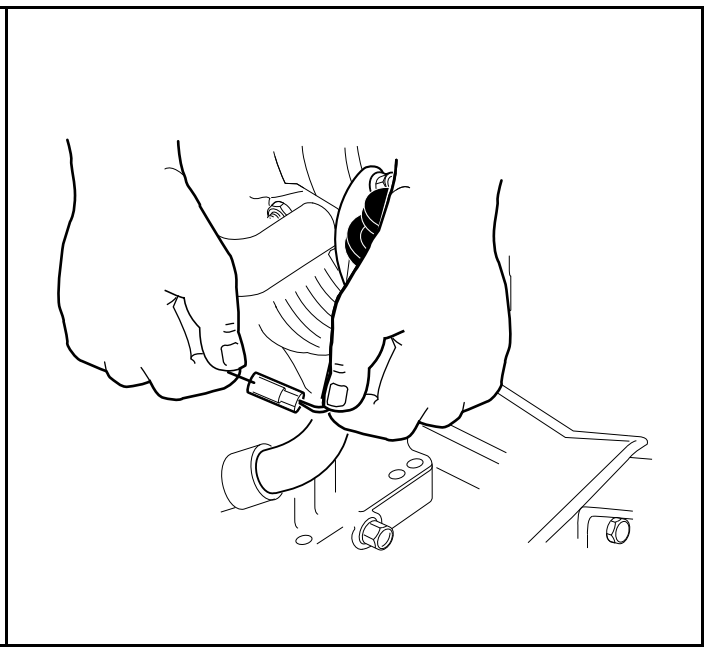

569
Figure 18-44 Ignition Kill Wire

19. Connect the oil level sensor wire (18-gauge yellow) to the jumper wire **(Figure 18-45, Page 18-18)**.
20. Connect the 6-gauge white wire to the F2 post, the 6-gauge black ground wire to the A2 post and tighten both wires to 48 in-lb (5.4 N·m). Connect the 16-gauge yellow wire to the DF post on the starter/generator and tighten to 30 in-lb (3.4 N·m) **(Figure 18-46, Page 18-18)**.

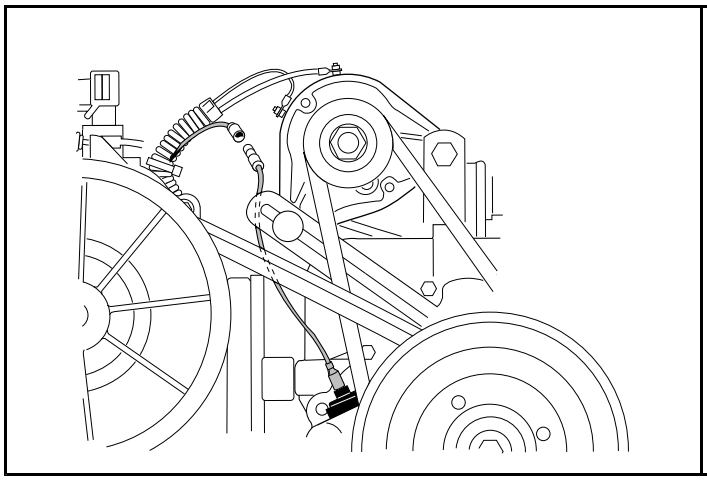

568
Figure 18-45 Oil Level Sensor Jumper wire

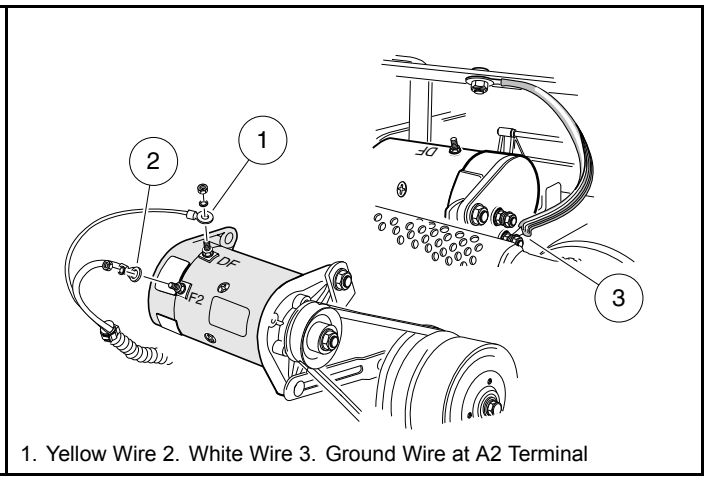

1. Yellow Wire 2. White Wire 3. Ground Wire at A2 Terminal

1350
Figure 18-46 Starter/Generator – Model 114-01-4005 shown

21. Route shifter cable through the shifter cable bracket. Ensure the cable boot is properly positioned through the bracket. The clips on the boot should hold the cable in place. Connect shifter cable rod end to the shifter arm **(Figure 18-47, Page 18-19)**.
22. Attach the ground wire to the mounting screw on the oil filler tube mounting bracket and tighten to 50 in-lb (5.7 N·m) **(Figure 18-48, Page 18-19)**.

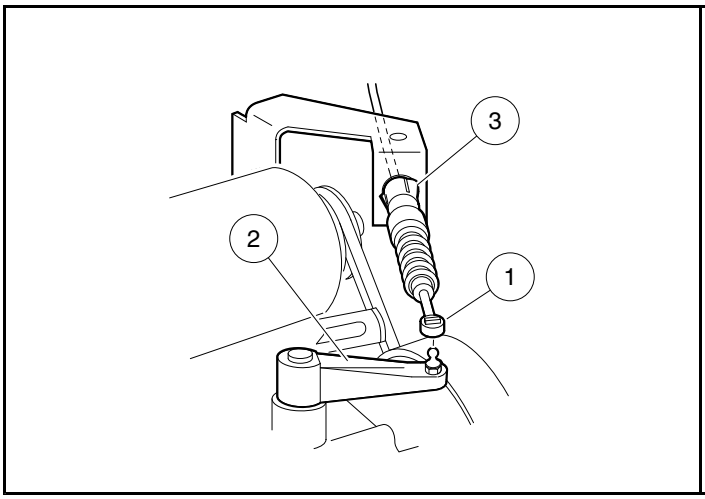

2399
Figure 18-47 Connect Shifter Cable

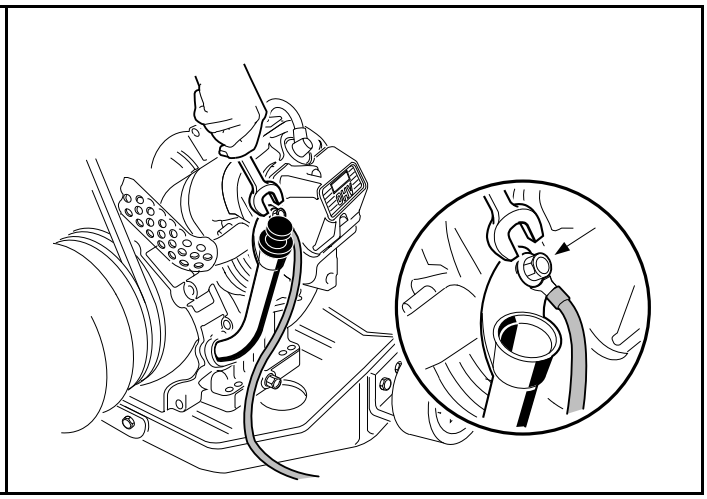

565
Figure 18-48 Engine Ground Wire

23. Insert the accelerator cable through the hole in the frame and connect the accelerator cable to the pedal group as described in Accelerator and Brake Pedal Group on page 5-1. Position the accelerator cable in the mounting brackets in the vehicle base and adjust mounting nuts (1) to remove all slack in the wire portion of the cable. Tighten mounting nuts to 23 in-lb (2.6 N·m) **(Figure 18-49, Page 18-19)**.
24. Remove the 1/4-inch bolt from the fuel line and connect the fuel line to the carburetor and secure with a hose clamp **(Figure 18-50, Page 18-19)**.

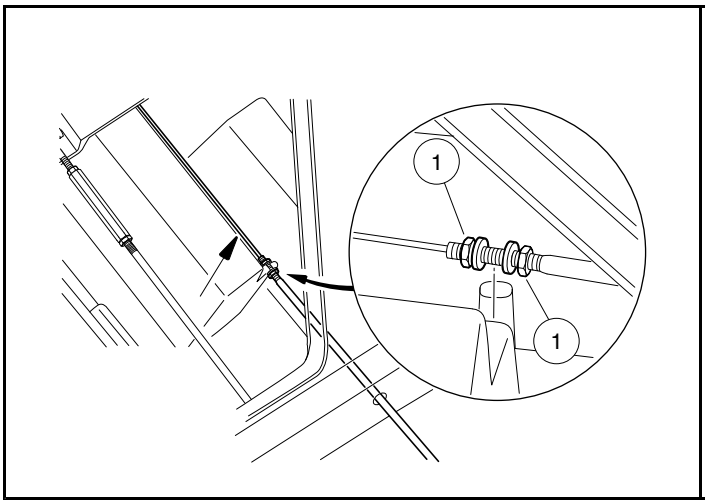

2398
Figure 18-49 Connect Cable

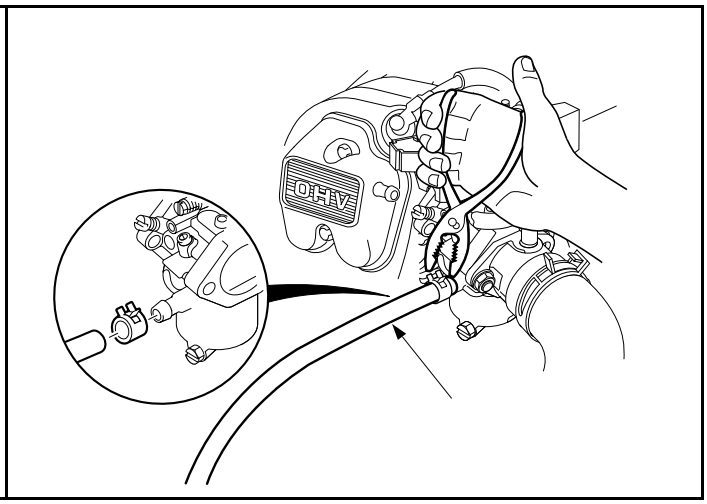

2397
Figure 18-50 Connect Fuel Line

25. Connect the impulse line to the fuel pump and secure it with the hose clamp **(Figure 18-51, Page 18-20)**.
26. Connect air intake hose to carburetor and secure hose clamp **(Figure 18-52, Page 18-20)**.

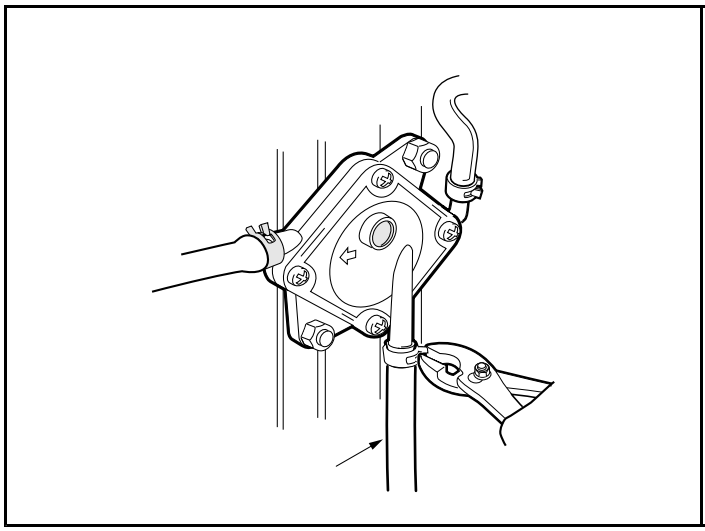

562

Figure 18-51 Impulse Line

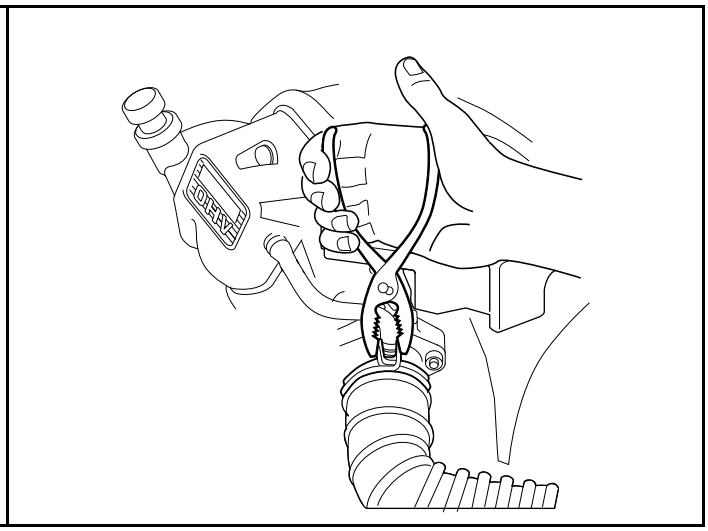

561

Figure 18-52 Air Intake Hose

27. Connect carburetor vent tube to carburetor and secure with hose clamp **(Figure 18-53, Page 18-20)**.

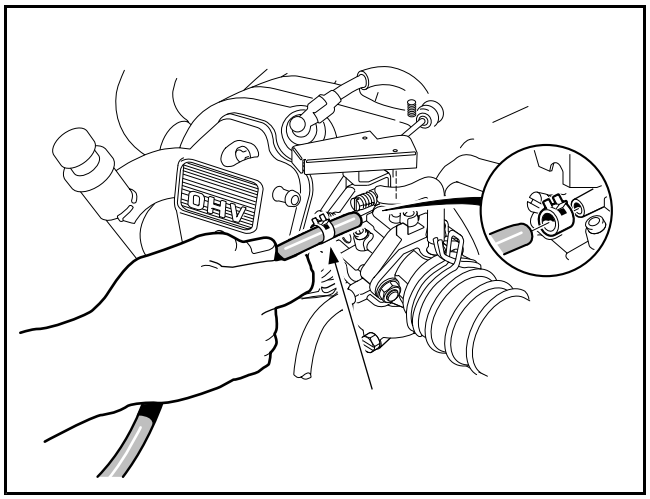

847

Figure 18-53 Carburetor Vent Tube

28. Install transaxle drain plug and tighten to 21 ft-lb (28.5 N·m).
29. Fill transaxle with 27 oz. (0.8 liter) 80-90 Wt. API class GL-3 or 80-90 WT. AGMA class EP gear lube. Install and tighten the level indicator hole plug to 21 ft-lb (28.5 N·m).
30. Ensure that all wiring is secured properly. **See following WARNING.**

⚠ WARNING

- **If wires are removed or replaced make sure wiring and wiring harness is properly routed and secured to vehicle frame. Failure to properly route and secure wiring could result in vehicle malfunction, property damage or personal injury.**

31. Connect battery and spark plug wire(s). **See Connecting the Battery – Gasoline Vehicles on page 1-3.**
32. Turn the fuel shut-off valve on top of the fuel tank to the open position **(Figure 16-15, Page 16-21)**.
33. Place the Forward/Reverse handle in the NEUTRAL position, chock the wheels, and the neutral lockout cam in the MAINTENANCE position. **See following DANGER.**

⚠ DANGER

- **Repair all fuel leaks before operating the vehicle.**

34. Start the engine and check for fuel leaks. If the fuel pump leaks, a rebuild kit must be installed to replace all gaskets and diaphragms.
35. Place the neutral lockout cam in the OPERATE position.
36. Adjust the engine RPM setting. **See Engine RPM Adjustment on page 16-8.**

FORWARD/REVERSE SHIFTER CABLE

See General Warnings on page 1-1.

If the Forward/Reverse shifter cable is damaged in any way, it must be replaced.

FORWARD/REVERSE SHIFTER CABLE REMOVAL

NOTE: *Before removing cable, note cable routing and positions of wire ties or other devices securing the cable to the vehicle. When installed, cable must be routed and secured as it was originally.*

1. Disconnect battery and spark plug wire(s). **See Disconnecting the Battery – Gasoline Vehicles on page 1-3.**
2. Loosen lock nut (26) where the cable attaches to the shifter **(Figure 18-54, Page 18-22)**. Push in the end of the ball joint socket (27) to release the cable from the ball stud (17).
3. Loosen retaining nuts (28) to release cable from bracket (10).
4. Release the wire tie (25) that is clipped to the bucket and secure the cable.
5. Use a screwdriver or flat blade to pry cable end off the stud on the lever arm.
6. Compress clips on boot enough to push boot through the cable bracket (24). Remove cable from vehicle.

FORWARD/REVERSE SHIFTER CABLE INSTALLATION

1. From the Forward/Reverse shifter, route the cable toward the passenger side of the vehicle so it lies against the side of the front body, turns 90° and passes over the battery, through the opening to the engine, and through the cable bracket to the shifter arm **(Figure 18-54, Page 18-22)**. Make sure cable does not touch muffler.
2. Place cable in bracket (10) and secure in position with two retaining nuts (28). Tighten retaining nuts to 43 in-lb (4.9 N·m).
3. Attach ball joint socket (27) to stud (17) on shifter. Tighten lock nut (26) to 43 in-lb (4.9 N·m).
4. Position cable near the clip and secure it with wire tie (25).
5. Push cable boot through cable bracket (24). Clips on boot should snap in place to secure the cable in position.
6. Place end of cable over stud on lever arm. Push down on cable end to snap the cable onto the stud.

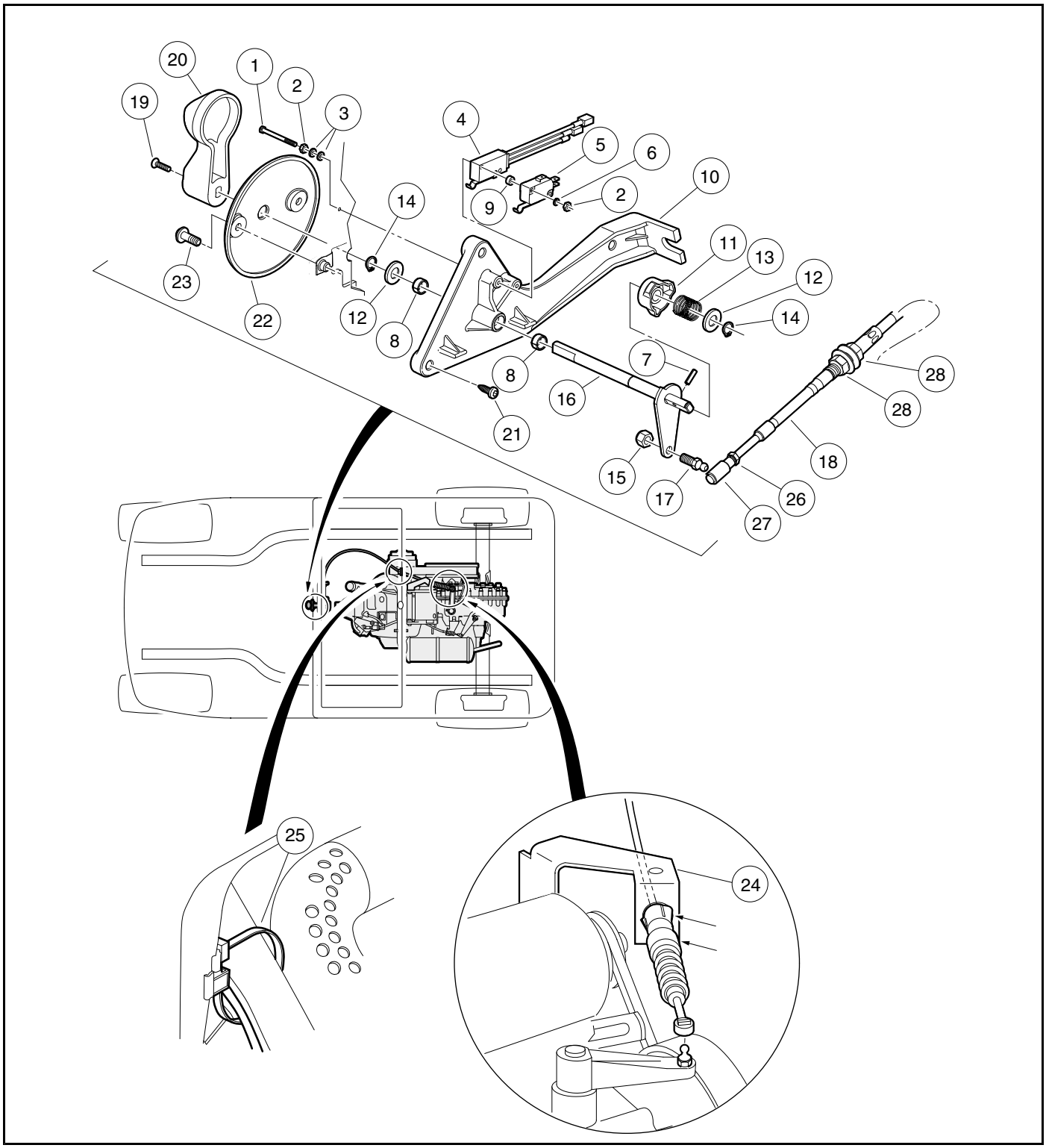

2408

Figure 18-54 Forward/Reverse Shifter Cable

FORWARD/REVERSE SHIFTER CABLE ADJUSTMENT

With the shifter lever of the unitized transaxle in the NEUTRAL position **(Figure 18-54, Page 18-22)**, the Forward/Reverse handle (20) should be straight up. For minor adjustments, the lock nut (26) may be loosened and the ball joint socket (27) rotated to get the proper adjustment. **See following CAUTION.**

⚠ CAUTION

- **Be sure threads of cable are engaged in ball joint socket at least 1/4 inch (6.35 mm). If ball joint socket comes loose from the cable, the Forward/Reverse shifter will not operate properly.**

For major adjustments, the cable retaining nuts (28) must be loosened and adjusted. When the cable is properly adjusted, with the Forward/Reverse handle (20) **(Figure 18-54, Page 18-22)** in the NEUTRAL position, the shift lever of the transaxle will also be in the NEUTRAL position **(Figure 18-55, Page 18-23)**. Retighten nuts at the Forward/Reverse assembly to 43 in-lb (4.9 N·m).

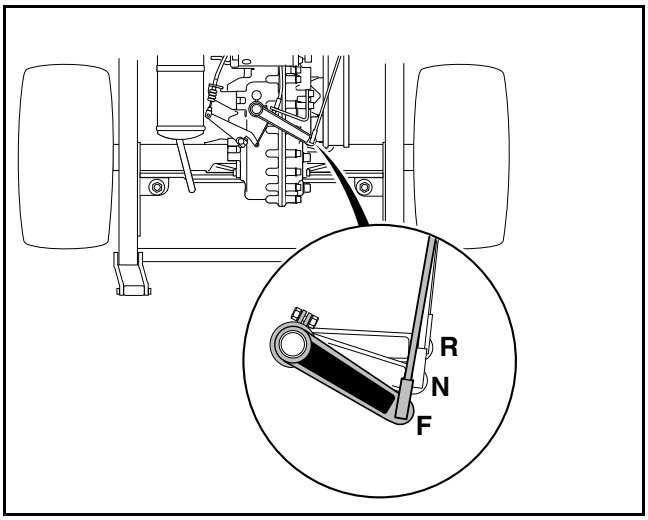

552

Figure 18-55 Forward/Reverse Shifter Positions

⚠ DANGER

- **See General Warnings on page 1-1.**

⚠ WARNING

- **See General Warnings on page 1-1.**

GENERAL INFORMATION

The torque converter consists of a drive clutch, a driven clutch, and a drive belt. The drive clutch, which is mounted to the engine, is in the open position when the engine is at idle. At this point, the belt is riding at a low position (smaller diameter) on the drive clutch. The driven clutch is mounted on the transaxle. It is in the closed position, and the drive belt is riding at a high position (large diameter) on it when the engine is at idle.

At the point of clutch engagement, the speed ratio of the drive clutch to the driven clutch is 3.5 to 1. This ratio provides excellent starting and low-speed torque.

As engine speed increases, centrifugal force on internal weights close the drive clutch, pushing the belt up to a higher position on the clutch (increasing the diameter of the belt loop). As the diameter of the belt loop increases at the drive clutch, the driven clutch is forced open as the diameter of its belt loop decreases. At governed top speed, the ratio of drive clutch to driven clutch is 0.92 to 1.

On steep grades, or when the vehicle is heavily loaded, higher torques are achieved through the use of a torque-sensing ramp device on the driven clutch. This device overcomes the force of the centrifugal weights to close the driven clutch and open the drive clutch, thus increasing axle torque with little or no change in engine RPM.

The engine and torque converter rotate clockwise as viewed from the clutch side of the engine.

To provide optimum performance for the OHV engine and powertrain, the vehicle uses a pair of tuned clutches.

To properly assemble and disassemble the torque converter, the following tools should be used:

- Torque Converter Tool Kit (P/N 1014510) **(Figure 19-1, Page 19-2)**.
- Scribe or small pick (not included in torque converter tool kit).

TROUBLESHOOTING

See General Warnings on page 1-1.

Maintaining proper adjustment of the engine and governor, as well as the torque converter, is essential to the troubleshooting process. If these adjustments are within specifications and, when climbing a steep hill, the engine begins to lose RPM before the drive belt reaches the top of the driven clutch, there is a torque converter problem.

If the torque converter is not operating properly, perform the following steps:

1. Check the governor and throttle settings. **See Engine Control Linkage on page 16-6.**
2. Inspect the driven clutch for dirt and dust buildup on its component parts. Clean the driven clutch with water to remove any dust or dirt, then drive the vehicle and check for proper operation.
3. If cleaning the driven clutch does not solve the problem, disassemble and thoroughly clean all parts of the drive clutch. Be sure to clean the plastic drive buttons (10) **(Figure 19-7, Page 19-7)**.

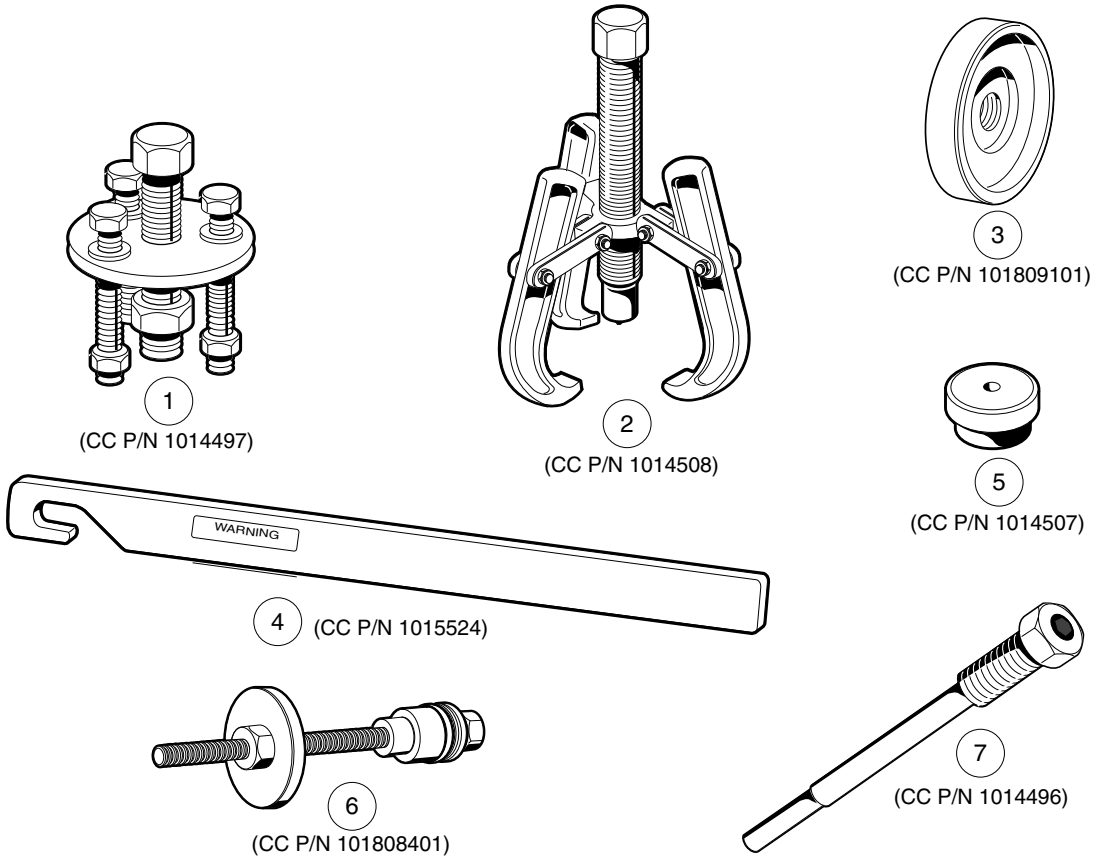

1. Drive Clutch Hub Puller 2. Driven Clutch Cam Puller 3. Driven Clutch Cam Press Tool 4. Drive Clutch Holder Tool 5. Driven Clutch Puller Plug 6. Cam Installation Tool 7. Drive Clutch Puller

593

Figure 19-1 Torque Converter Tool Kit

DRIVE BELT

See General Warnings on page 1-1.

The drive belt should be inspected semiannually for wear and (or) glazing. If it is excessively worn, frayed, or glazed, replace the belt.

As the drive belt wears, the engine RPM will increase to compensate for the change in torque converter ratio. This will keep the vehicle's maximum ground speed correct. **See Section 2 – Vehicle Specifications.**

DRIVE BELT REMOVAL

1. Disconnect battery and spark plug wire(s). **See Disconnecting the Battery – Gasoline Vehicles on page 1-3.**
2. Grasp the belt midway between the drive (2) and driven (1) clutches. Lift upward on the belt to force the sheaves of the DRIVEN clutch apart, then roll the belt off the DRIVEN clutch by rotating the clutch counterclockwise **(Figure 19-2, Page 19-3)**. **See following CAUTION.**

⚠ CAUTION

- **Make sure fingers are not underneath the belt when rolling the belt off the driven clutch.**

3. Remove the belt from the drive clutch.

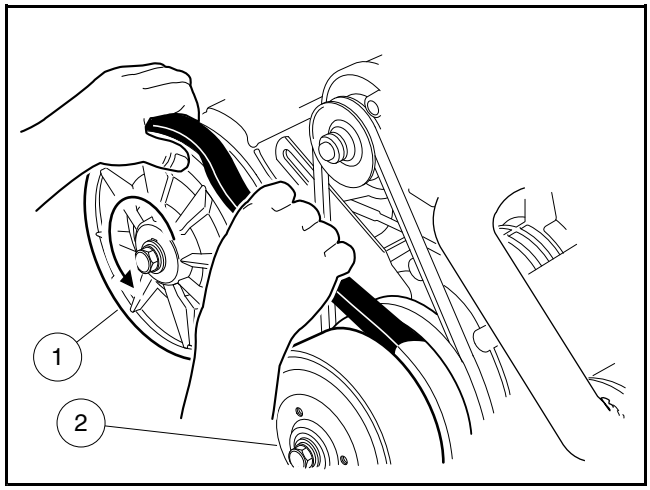

594

Figure 19-2 Drive Belt Removal

DRIVE BELT INSTALLATION

1. Position the new belt on the drive clutch, then start the belt over the top of the driven clutch.
2. With the belt started onto the driven clutch, rotate the driven clutch counterclockwise and roll the belt over the driven clutch sheaves and onto the clutch.
3. Connect battery and spark plug wire(s). **See Connecting the Battery – Gasoline Vehicles on page 1-3.**

DRIVE CLUTCH

See General Warnings on page 1-1.

⚠ CAUTION

- **Be very careful when handling the clutches. A clutch that has been dropped will not be properly balanced. If either clutch is dropped, assume that it is damaged and replace it.**

DRIVE CLUTCH REMOVAL

1. Remove the drive belt as instructed. **See Drive Belt Removal on page 19-3.**
2. Loosen the starter/generator mounting and adjusting hardware and then remove the starter belt. **See WARNING "Moving parts! Do not..." in General Warnings on page 1-1.**

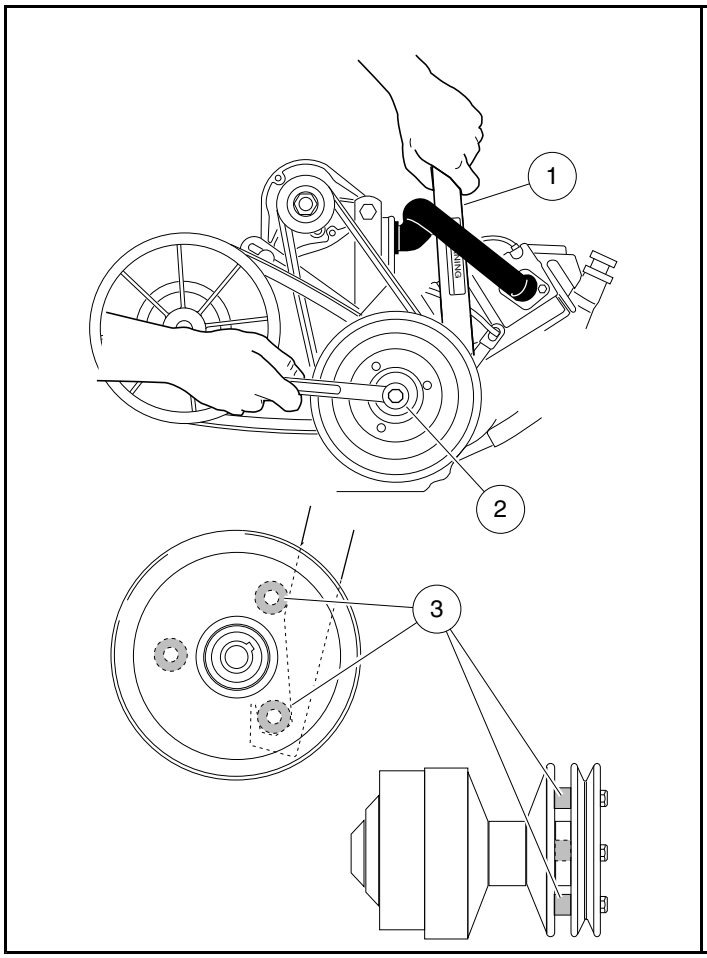

595

Figure 19-3 Loosen Retaining Bolt

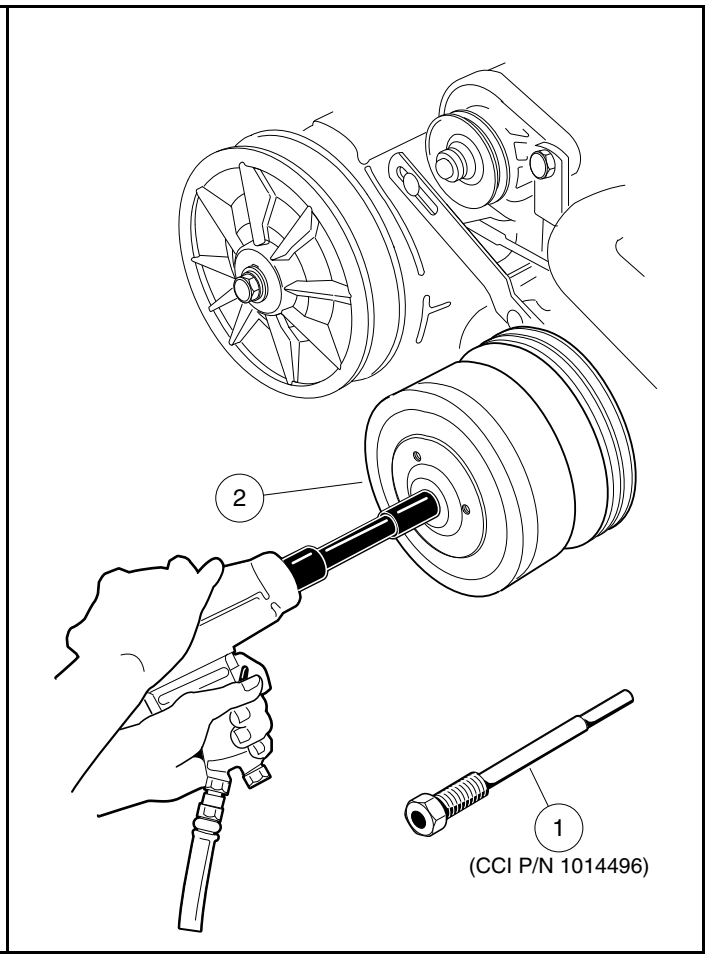

596

Figure 19-4 Drive Clutch Removal

3. Remove the lower shock mounting hardware from both rear shocks **(Figure 19-5, Page 19-5)**.
4. Place chocks at the front wheels and lift the rear of the vehicle just enough to relieve tension from leaf springs, then remove the bolts securing the leaf springs to the shackles **(Figure 19-6, Page 19-5)**.

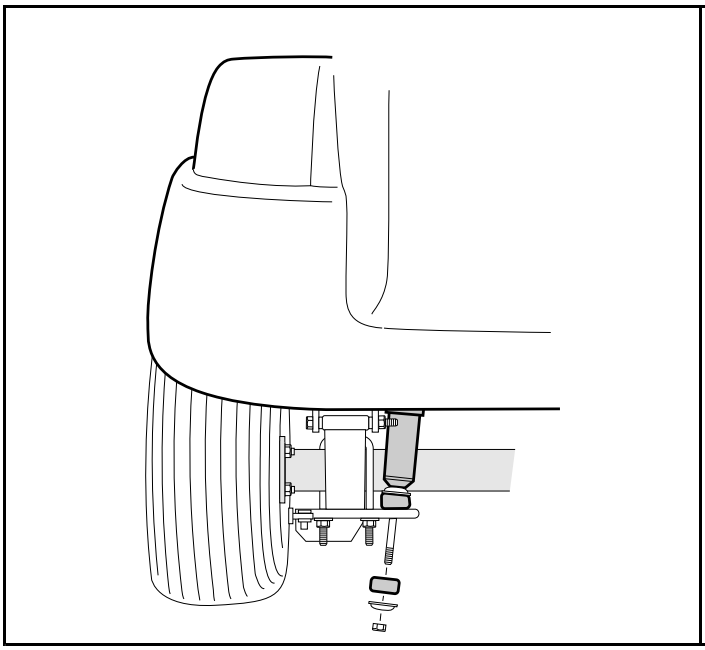

767

Figure 19-5 Shock Absorbers

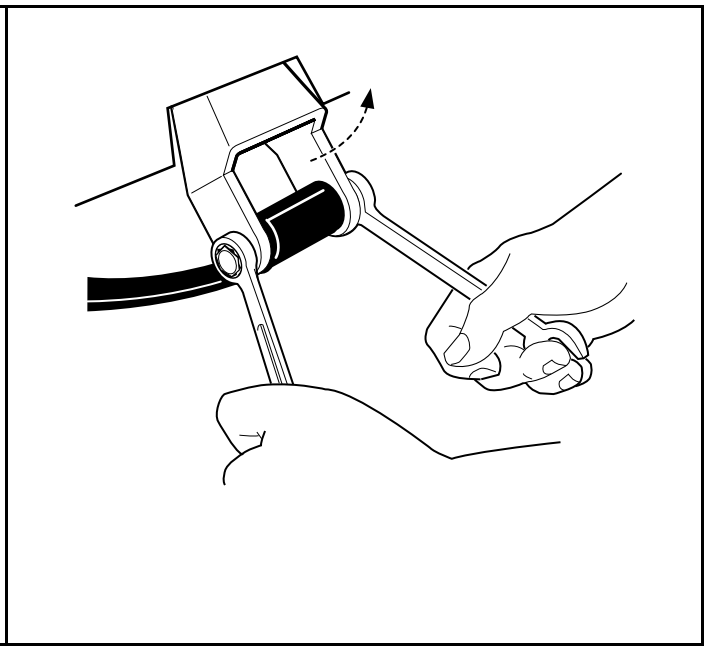

768

Figure 19-6 Rear Shackle

5. Raise the rear of the vehicle enough to allow the centerline of the drive clutch to drop below the frame rails for access to the bolt securing the drive clutch. Place jack stands beneath the frame rails just forward of the spring mounts. **See following WARNING.**

⚠ WARNING

- **Lift only one end of the vehicle at a time. Use a suitable lifting device (chain hoist or hydraulic floor jack) with 1000 lb. (454 kg) minimum lifting capacity. Do not use lifting device to hold vehicle in raised position. Use approved jack stands of proper weight capacity to support the vehicle and chock the wheels that remain on the floor. When not performing a test or service procedure that requires movement of the wheels, lock the brakes.**

6. Remove the drive clutch retaining bolt (17) and mounting washer (19) **(Figure 19-7, Page 19-7)**. **See also Figure 19-3, Page 19-4. See following NOTE.**

NOTE: *The drive clutch mounting bolt has left-hand threads.*

The crankshaft has left-hand threads at the clutch mounting hole.

6.1. Use the drive clutch holder tool (1) while tightening or loosening the drive clutch retaining bolt (2) **(Figure 19-3, Page 19-4)**.

6.2. Hook clutch holder on boss (3) of pulley located behind drive clutch and push against the adjacent boss with holder.

7. Lubricate the threaded portion of the clutch puller tool (1) with a light oil and thread the clutch puller tool into the clutch retaining bolt hole **(Figure 19-4, Page 19-4)**.
8. Use a 1/2-inch drive air wrench to tighten the clutch puller tool. The drive clutch (2) will pull free of the crankshaft.
9. Support the drive clutch assembly in your hand and back the clutch puller tool out of the crankshaft.

⚠ CAUTION

- **Do not hit or tap the clutch with a hammer. Do not pry the clutch. These actions will damage the clutch.**

DRIVE CLUTCH CLEANING AND INSPECTION

1. Use a dry, lint-free cloth to clean clutch parts.

⚠ CAUTION

- **Do not lubricate the drive clutch. Lubricants attract dirt and dust, which interfere with proper clutch operation.**
- **Use only a dry cloth to lightly wipe the shaft of the fixed face assembly (7) (Figure 19-7, Page 19-7). Do not use a brush or steel wool. These will damage the surface of the shaft.**
- **Do not use solvents. Solvents will damage the lubricating characteristics of the bushings.**

2. Inspect the belt contact surfaces of the clutch sheaves for wear. If any area of a sheave contact surface has wear of 0.060 inch (1.52 mm) or more, the clutch should be replaced.

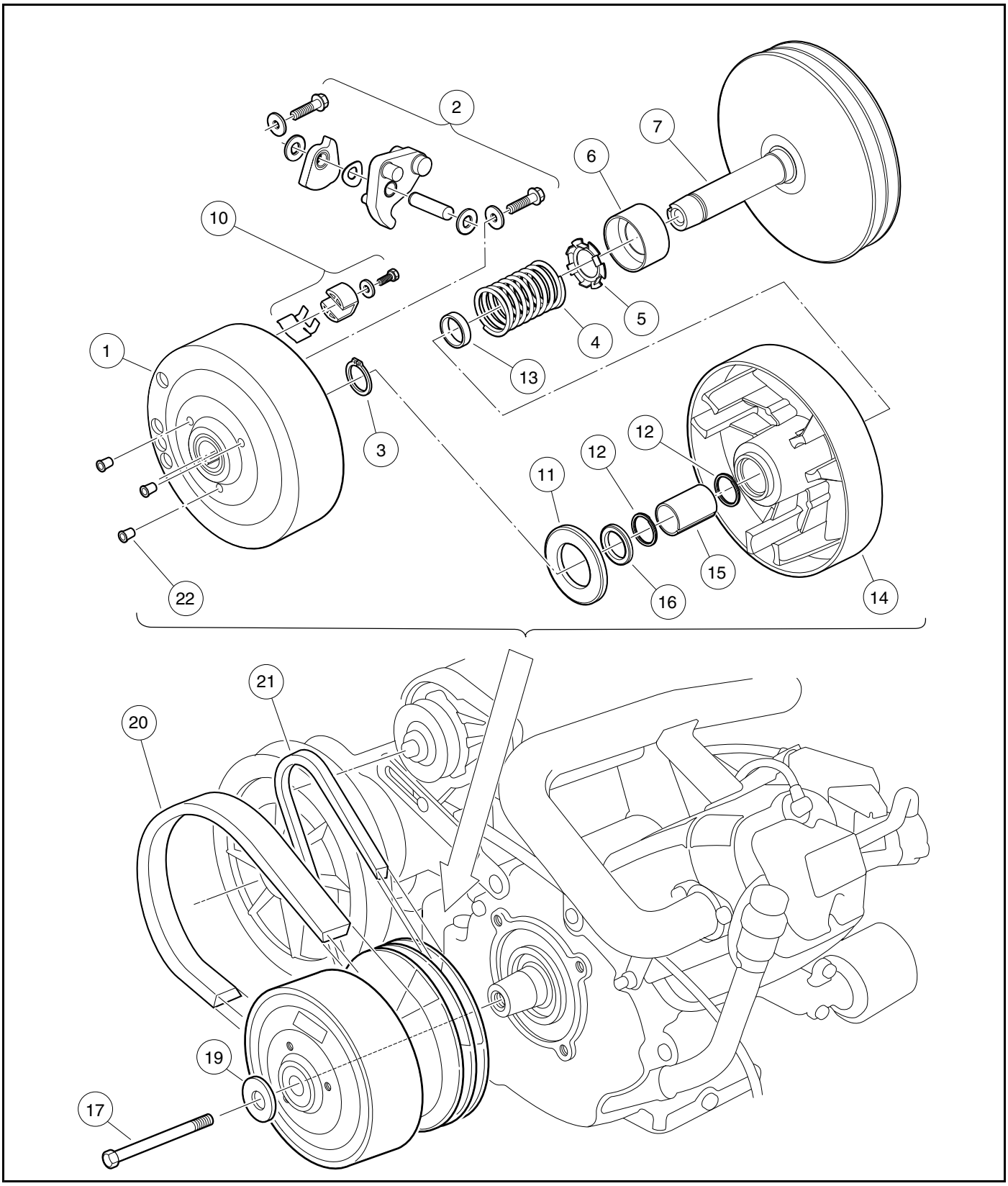

597

Figure 19-7 Drive Clutch Assembly

DRIVE CLUTCH DISASSEMBLY

⚠ CAUTION

- **The drive clutch is balanced as an assembly. Before disassembly, make match marks on the drive clutch hub and on the moveable face assembly so they can be reassembled in the same positions (Figure 19-8, Page 19-8).**

1. Make match marks on the drive clutch hub and on the moveable face casting **(Figure 19-8, Page 19-8)**.
2. Remove the drive clutch hub (1) **(Figure 19-7, Page 19-7)**:
   2.1. Remove the three plugs (22) from the clutch puller attachment holes **(Figure 19-7, Page 19-7)**.
   2.2. Thread the center bolt of the Drive Clutch Hub Puller (1) (P/N 1014497) into clutch until the stop nut touches the clutch, then back the bolt out one-half turn **(Figure 19-9, Page 19-8)**.
   2.3. Thread the three small bolts of the puller (1) into corresponding holes in the clutch. Tighten bolts evenly, making sure the face of the puller plate is parallel to the face of the clutch **(Figure 19-9, Page 19-8)**.
   2.4. Unscrew the puller center bolt out of the clutch to pull drive clutch hub off.

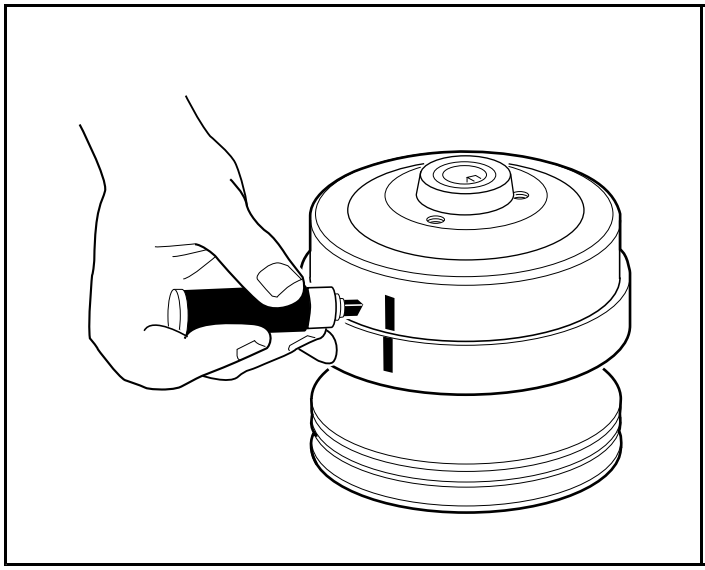

598
Figure 19-8 Mark Drive Clutch Hub

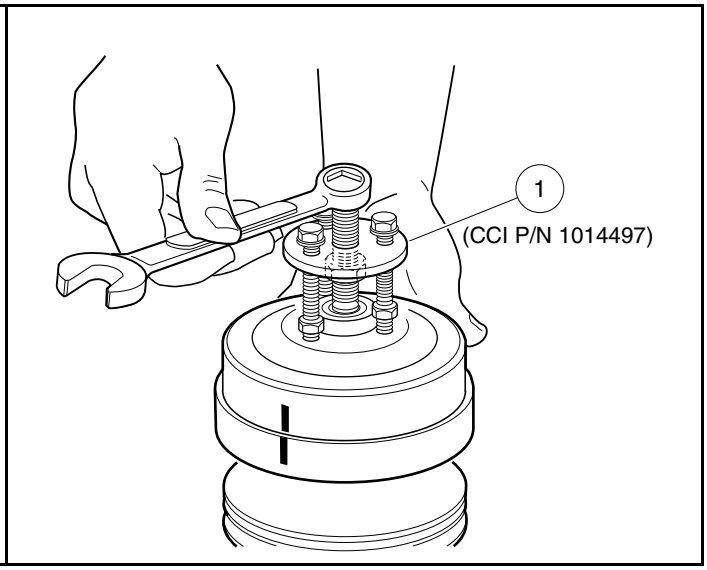

599
Figure 19-9 Remove Drive Clutch Hub

3. Remove the thrust washer (11) from the moveable face (14) **(Figure 19-7, Page 19-7)**.
4. Remove the drive buttons (3) by removing the screws (1), flat washers (2), and drive button take-up springs (4) as shown **(Figure 19-10, Page 19-9)**.

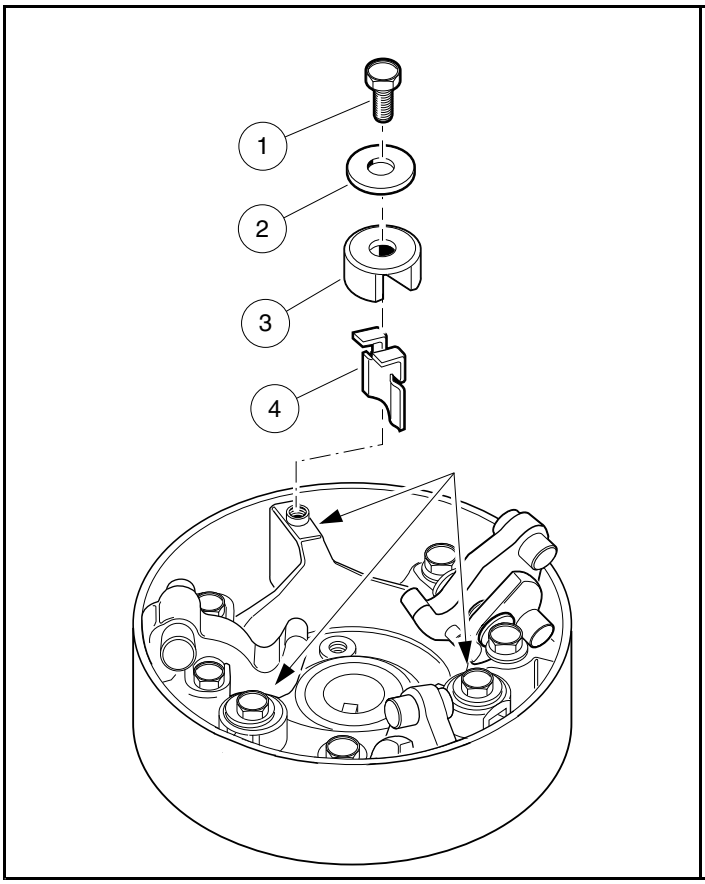

600

Figure 19-10 Drive Button Mounting

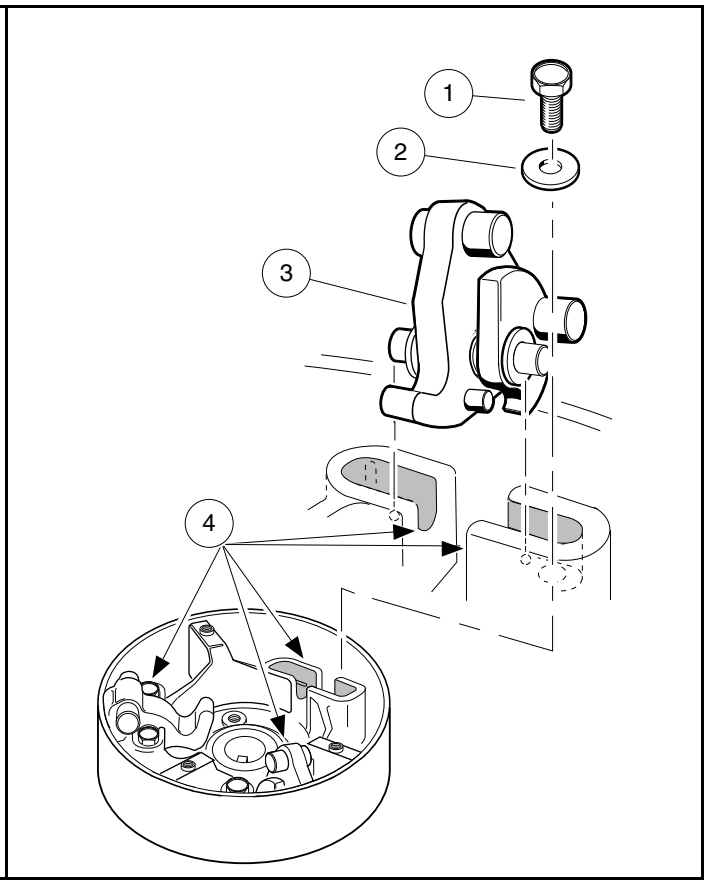

601

Figure 19-11 Weight Position

5. Remove the clutch weights:
   5.1. Remove the screws (1) and flat washers (2) attaching the weights (3) as shown **(Figure 19-11, Page 19-9)**.
   5.2. Pull the weight assemblies (3), with pins, from slots (4) in the clutch. **See following NOTE.**

NOTE: *Before removing, note the orientation of the wave washer (1) and secondary weight (2) on the primary weight (3)* ***(Figure 19-12, Page 19-9)***.

   5.3. Remove the plastic washers, weights (2 and 3) and wave washer (1) from the pin (4). Retain all parts.

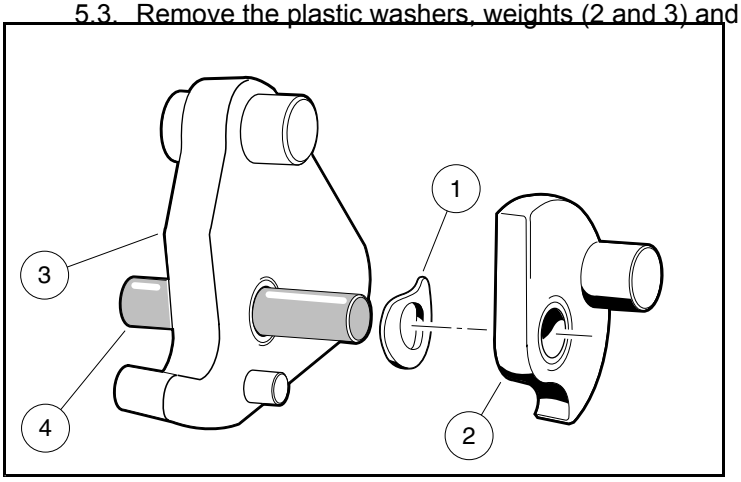

602

Figure 19-12 Primary and Secondary Weights, Wave Washer and Pin

6. Remove the retaining ring (3) from the shaft of the fixed face assembly (7) and slide the moveable face (14) off the shaft **(Figure 19-7, Page 19-7)**. **See following NOTE.**

NOTE: *If the moveable face is removed from the hub of the fixed face, the spiral back-up rings (12) must be replaced with new ones* ***(Figure 19-7, Page 19-7)****.*

7. Remove the spacer (16), and spring (4) and retainer (5). The spring retainer can be removed from the spring if necessary **(Figure 19-7, Page 19-7)**.
8. If necessary, remove idler bearing (2). Use a press (1) and bearing puller (3) to remove the bearing from the fixed face assembly (4) **(Figure 19-13, Page 19-10)**. **See following NOTE.**

NOTE: *Do not remove the idler bearing unless it needs to be replaced. If idler bearing is removed, replace it with a new bearing.*

9. Use a scribe or small pick to remove the spiral backup rings (12) from each end of the bore in the fixed face assembly **(Figure 19-7, Page 19-7)**. **See also Figure 19-14, Page 19-10.** Discard the rings.

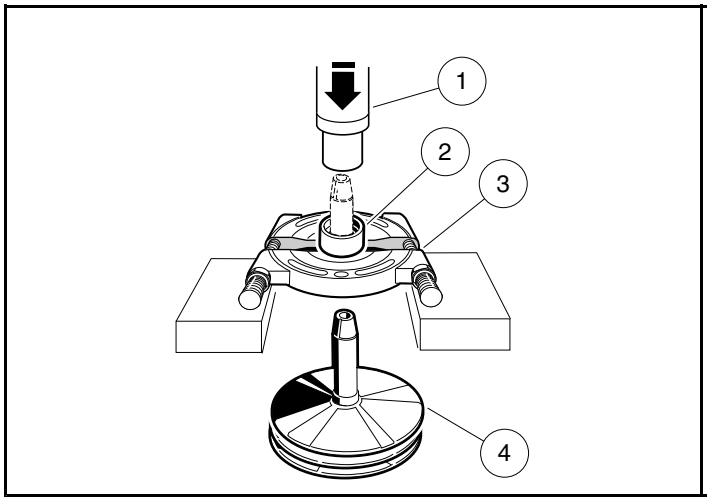

604

Figure 19-13 Remove Idler Bearing

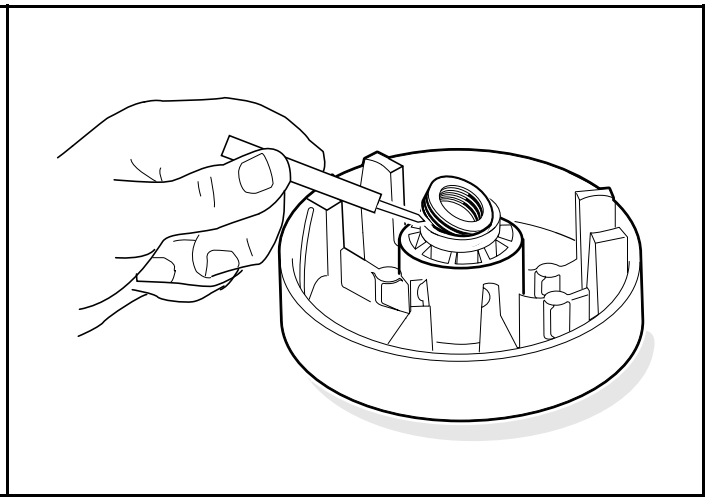

605

Figure 19-14 Spiral Back-up Rings

INSPECTION OF DRIVE CLUTCH PARTS

1. Inspect the idler bearing (6) for smooth rotation or seal damage **(Figure 19-7, Page 19-7)**. **See following NOTE.**

NOTE: *It is normal for a small amount of grease to be present at the edge of seal.*

2. Inspect the bore of the moveable face assembly (14) for scarring or wear. The moveable face assembly must be replaced if the bore is worn to a diameter of 0.883 inch (22.4 mm) or larger **(Figure 19-7, Page 19-7)**.
3. Inspect the steel shaft (7) on the fixed face assembly. There should be no measurable wear anywhere on the shaft. Replace the shaft if it is worn, scratched, or damaged.
4. Inspect the thrust washer (11) for wear. If it is worn more than 0.030 inch (0.76 mm), turn it over or replace it with a new one.
5. Inspect the primary weights (2) and the hub casting for wear. If the primary weights show signs they are touching the casting, the tips of the weights have worn beyond specification and they must be replaced.
6. Inspect the pins on the primary weights (2). There should be no measurable wear. Replace them if they are worn, scratched, or damaged**.**
7. Inspect the drive belt pulley sheaves for excessive wear or damage. If the sheaves are excessively worn or damaged, replace the entire fixed face drive assembly.

DRIVE CLUTCH ASSEMBLY

1. Press idler bearing (6) onto the shaft of the fixed face assembly (7). Press on the inner race of the bearing only. Make sure that the cup side of bearing is facing away from the fixed face **(Figure 19-7, Page 19-7)**.
2. Using needle nose pliers, install the spring retainer (5) onto the spring (4).
3. Install the spring (4) and retainer (5) into the cup of the idler bearing (6).
4. Install the spacer (13) onto the shaft of the fixed face.
5. Install a new spiral backup ring (12) in each end of the bore of the moveable face assembly (14).
6. Install the moveable face assembly (14) onto the shaft of the fixed face assembly (7).

⚠ CAUTION

- **To avoid damaging the spiral back-up rings, be very careful when installing the moveable face.**

6.1. Rotate the moveable face assembly clockwise while installing it onto the shaft.

6.2. Install the retaining ring (3) **(Figure 19-7, Page 19-7)**.

7. Install the primary weights (3) on the mounting pins (4) **(Figure 19-12, Page 19-9)**.
8. Install a wave washer (1) on each mounting pin (4). Make sure that the concave side of the washer faces the side of the primary weight (3) with the small guide pin protruding from it **(Figure 19-12, Page 19-9)**.
9. Install the secondary weights (2) onto the mounting pins (4) with the weight pins on the secondary weights pointing away from the primary weights (3). The wave washers should be between the primary and secondary weights **(Figure 19-12, Page 19-9)**.
10. Install white plastic flat washers on each end of the mounting pin and push them against the outside surfaces of the weights. Center the weights and washers on the mounting pin **(Figure 19-15, Page 19-11)**.
11. Install the weight assemblies into the slots (4) in the hub casting **(Figure 19-11, Page 19-9)**. Make sure the mounting pin protrudes an equal amount on each side of the weights when the assemblies are in position **(Figure 19-15, Page 19-11)**.

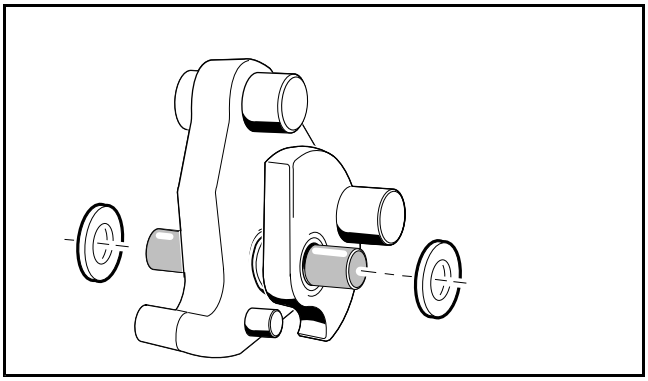

606

Figure 19-15 Install White Washers

12. Install the 1/4-20 bolts and washers (2) and tighten them to 10 ft-lb (13 N·m) **(Figure 19-7, Page 19-7)**. **See following NOTE.**

NOTE: *Make sure there is at least a (minimum) gap of 0.020 inch (0.51 mm) between each end of the mounting pin and the mounting bolt.*

13. Install three drive button take-up springs.

13.1. Install each spring on right-hand side of the three button mounting posts (when looking into the interior of the clutch drive hub, and with the rib at a twelve o'clock position) as shown **(Figure 19-16, Page 19-12)**.

14. Compress each take-up spring and install the drive button over the rib and take-up spring **(Figure 19-10, Page 19-9)**.
15. Install a no. 10-24 button retaining screw with flat washer through each button and into the rib. Tighten the screws to 34 in-lb (3.8 N·m) **(Figure 19-11, Page 19-9)**.
16. Install the thrust washer (11) onto the moveable face assembly **(Figure 19-7, Page 19-7)**.
17. Install the hub assembly (8) on the moveable face assembly and align the match marks made before disassembling the clutch. Press the hub assembly on by hand.
18. Replace the three plastic plugs (22) into the hole protectors **(Figure 19-7, Page 19-7)**.

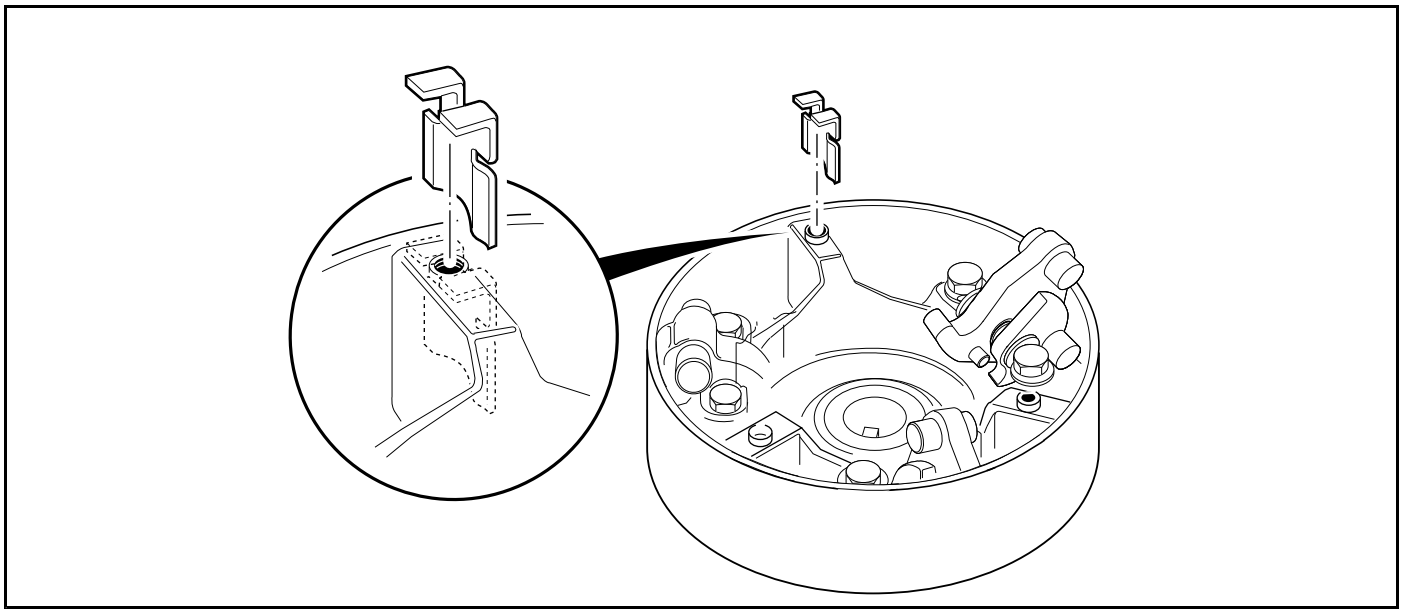

607

Figure 19-16 Correct Orientation of Drive Button Take-up Springs

DRIVE CLUTCH INSTALLATION

1. Place the drive clutch assembly on the crankshaft taper. Position the mounting washer (19) on the bolt (17) and start the bolt into the crankshaft **(Figure 19-7, Page 19-7)**. **See following NOTE.**

NOTE: *The drive clutch retaining bolt has left-hand threads. The manufacturer recommends replacing the drive clutch retaining bolt (PN 103345701) when installing the drive clutch. If a new bolt is not available, clean the threads of the original bolt and apply Loctite® 242 to the threaded end prior to installation.*

2. Tighten the drive clutch retaining bolt (17) to 25 ft-lb (33.9 N·m) **(Figure 19-7, Page 19-7)**.
3. Install the starter/generator belt and adjust belt tension as instructed. **See Belt Tension Adjustment on page 13-23.** Tighten the starter/generator mounting hardware to 23 ft-lb (31.2 N·m) and the adjusting hardware to 13 ft-lb (17.6 N·m).
4. Lower vehicle to the height required to position the leaf springs in the mounting shackles. Install the mounting bolts and lock nuts. Tighten lock nuts to 15 ft-lb (20.3 N·m) **(Figure 19-17, Page 19-13)**.
5. Position shocks in the shock mounts and install cushions, mounting washers, and nuts **(Figure 19-17, Page 19-13)**. Tighten nuts until cushions expand to be the same diameter as the mounting washers.

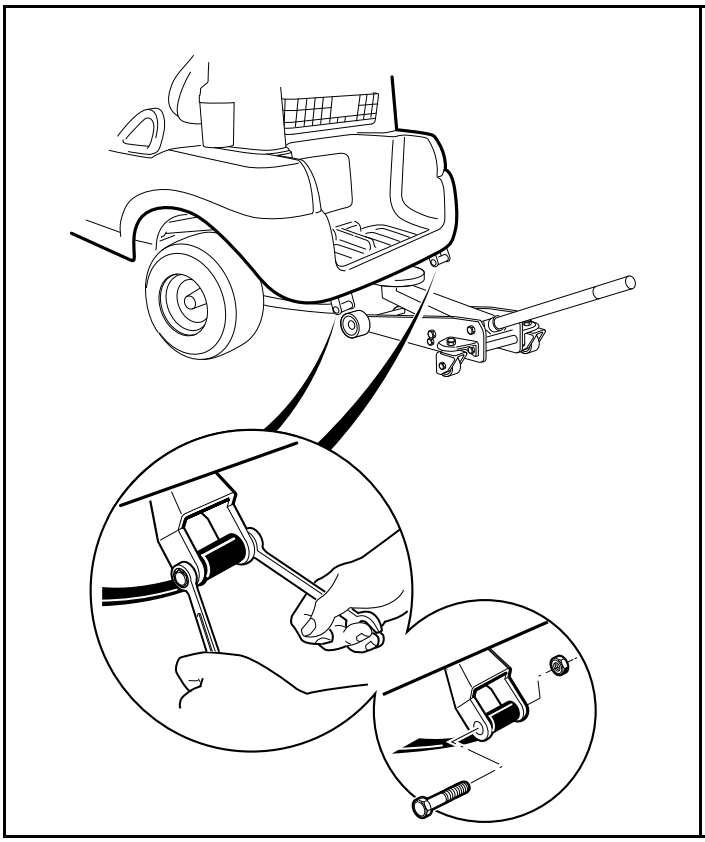

2410

Figure 19-17 Leaf Spring and Shackles

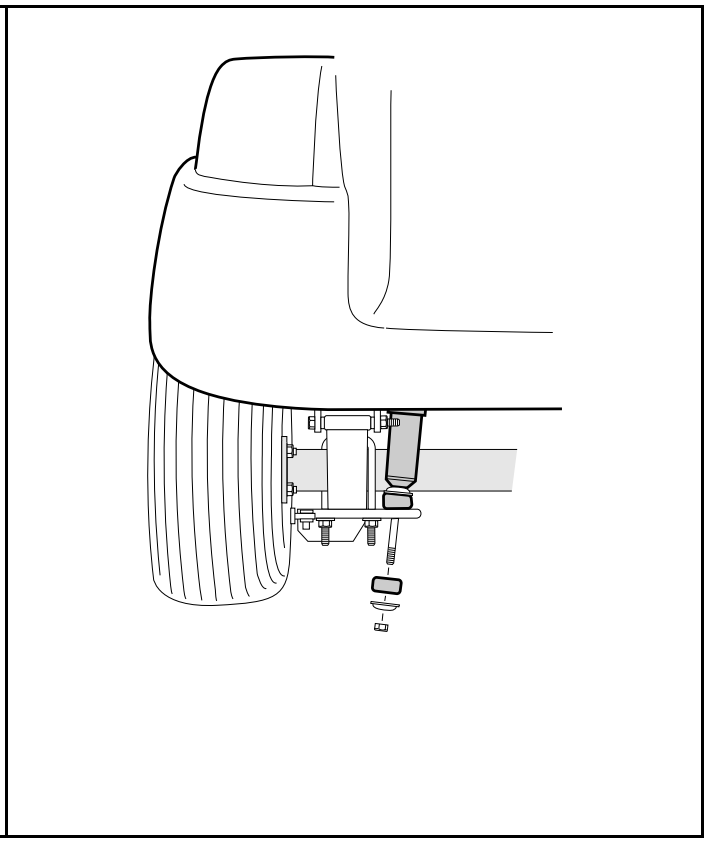

767

Figure 19-18 Shock Absorbers

6. Lower vehicle and remove the lifting device.
7. Install the drive belt as instructed. **See Drive Belt Installation on page 19-3.**
8. Connect battery and spark plug wire(s). **See Connecting the Battery – Gasoline Vehicles on page 1-3.**
9. Drive the vehicle and check for proper operation.

DRIVEN CLUTCH

See General Warnings on page 1-1.

DRIVEN CLUTCH REMOVAL

1. Remove the drive belt as instructed. **See Drive Belt Removal on page 19-3.**
2. Remove the bolt (11) and mounting washer (12) from the clutch shaft **(Figure 19-21, Page 19-15)**.
3. Grasp the driven clutch assembly and slide it off the shaft.
4. Leave the key (9) in the keyway.

DRIVEN CLUTCH DISASSEMBLY

1. Using external snap ring pliers, remove the retaining ring (4) **(Figure 19-19, Page 19-14)**. **See following WARNING.**

⚠ WARNING

- **Do not place fingers under the cam when removing the cam. The moveable face may spin when the cam buttons release from the cam ramps, resulting in severe personal injury.**

2. Insert a puller plug (2) (P/N 1014507) **(Figure 19-20, Page 19-14)** into the shaft bore and use a driven clutch cam puller (1) (P/N 1014508) to remove the cam (3) from the fixed face shaft **(Figure 19-21, Page 19-15)**.
3. Remove the spring (5) **(Figure 19-21, Page 19-15)**.
4. Retain the key (3).
5. Slide the moveable face (7) off the fixed face shaft (8).

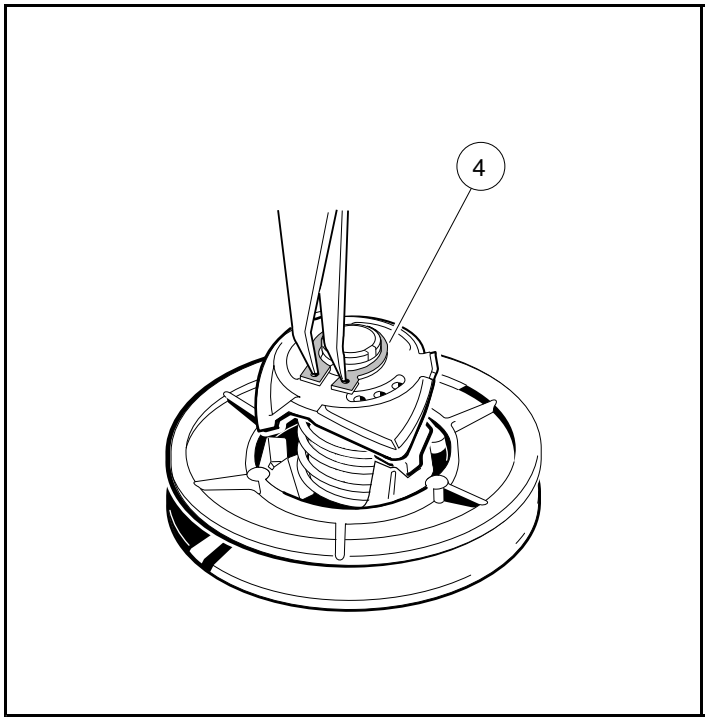

608
Figure 19-19 Remove Retaining Ring

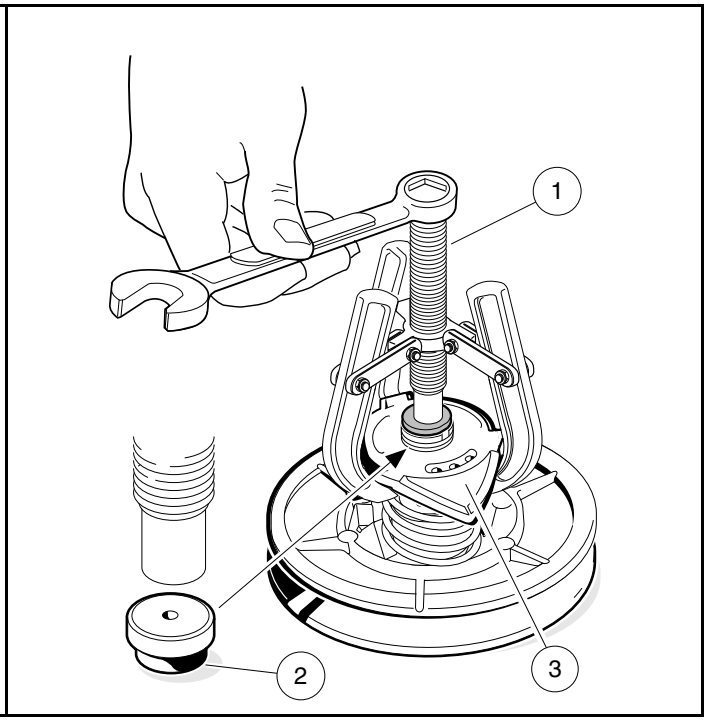

609
Figure 19-20 Driven Clutch Disassembly

DRIVEN CLUTCH INSPECTION

1. Inspect the cam (4) for excessive wear. Replace it if necessary **(Figure 19-21, Page 19-15)**.
2. Inspect the drive buttons (6) for excessive wear. Replace if necessary. To remove the drive buttons, remove the socket-head cap screws and then the buttons.
3. Inspect the smooth surface on the fixed and moveable face assemblies. Assemblies must be replaced if surfaces are worn more than 0.060 inch (1.5 mm).
4. Inspect the bronze bearing in the moveable face. If the bearing bore diameter is more than 1.384 inch (35.15 mm), the entire moveable face assembly must be replaced.
5. Inspect the shaft of the fixed face assembly. There should be no noticeable wear. Replace the shaft if it is worn, scratched or damaged.

DRIVEN CLUTCH ASSEMBLY

1. Place the three drive buttons (6) in position. Apply one drop of Loctite® 222 to each of the socket-head cap screws and then install and tighten them to 8 in-lb (0.9 N·m) **(Figure 19-21, Page 19-15)**.
2. Slide the moveable face assembly (7) onto the fixed face shaft (8).
3. Place the end of the spring (5) into the hole in the moveable face assembly.
4. Install the key (3) into the keyway of the fixed face assembly (8) shaft.

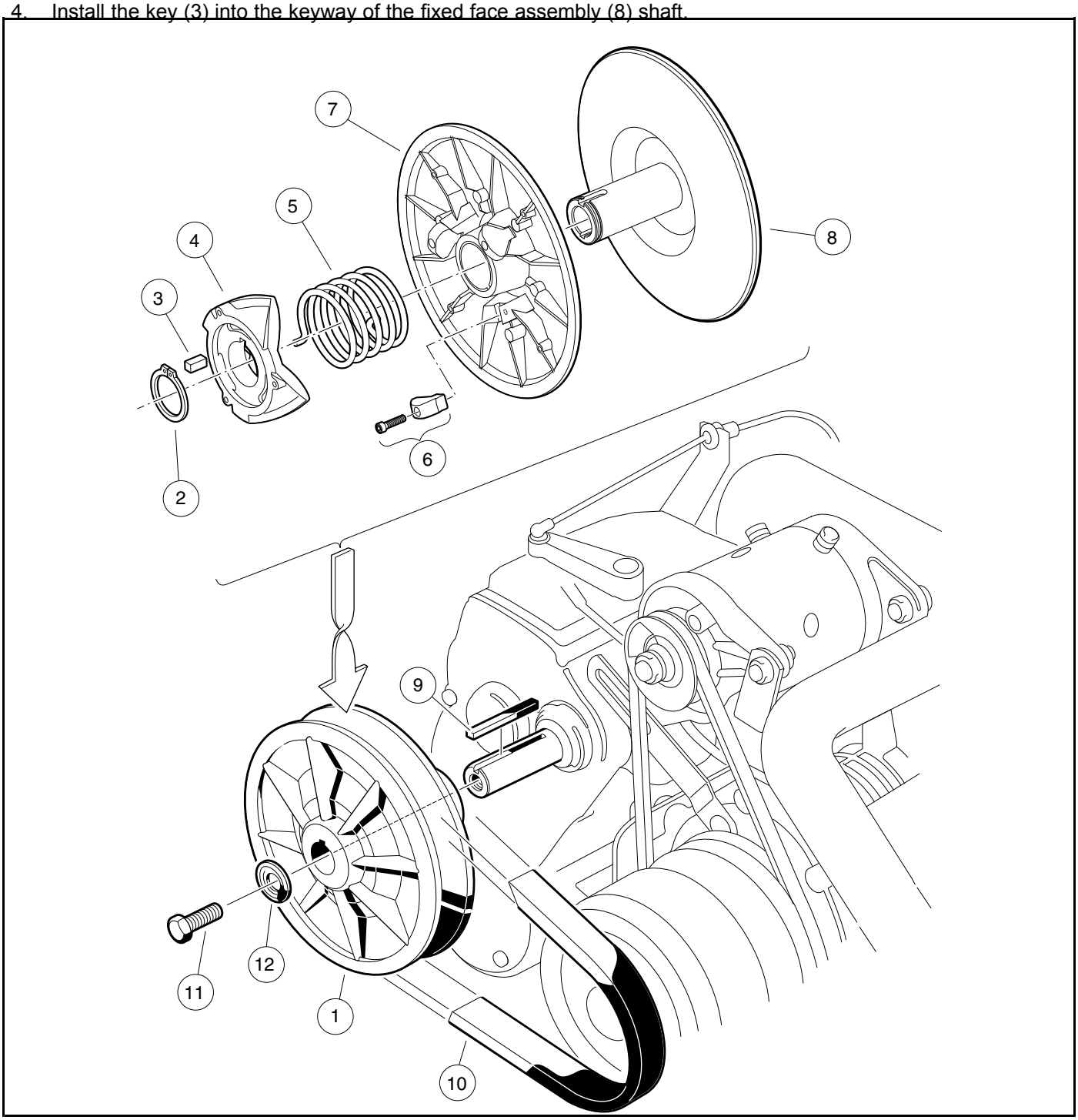

610

Figure 19-21 Driven Clutch Assembly

5. Holding the cam (4) in position for assembly on the shaft, install the other end of the spring (5) into the center spring hole of the cam. Rotate the cam until the keyway is aligned with the key (3) on the fixed face assembly, and then start the cam onto the shaft approximately 1/4 to 3/8 inch (6.3 to 9.5 mm).

5.1. **Press Assembly Process:**

5.1.1. Place the clutch assembly in a press and position the cam press tool (P/N 101809101) on the cam as shown **(Figure 19-22, Page 19-16)**.

5.1.2. Hold the fixed face assembly (3) and rotate the moveable face assembly (1) one-third turn **clockwise**, then press the cam (2) onto the fixed face assembly **(Figure 19-22, Page 19-16)**.

5.1.3. Install the retaining ring (2) **(Figure 19-21, Page 19-15)**. **See following NOTE.**

NOTE: *The retaining ring can be reused if the O.D. does not exceed 1.607 inches (40.82 mm); otherwise, it must be replaced with a new ring (P/N 1014080).*

5.1.4. While holding onto the cam, tap the end of the fixed face shaft lightly with a plastic mallet until the cam seats against the retaining ring. **See following CAUTION.**

⚠ CAUTION

- **Do not use a metal hammer to tap the fixed face hub. A metal hammer will damage the shaft.**

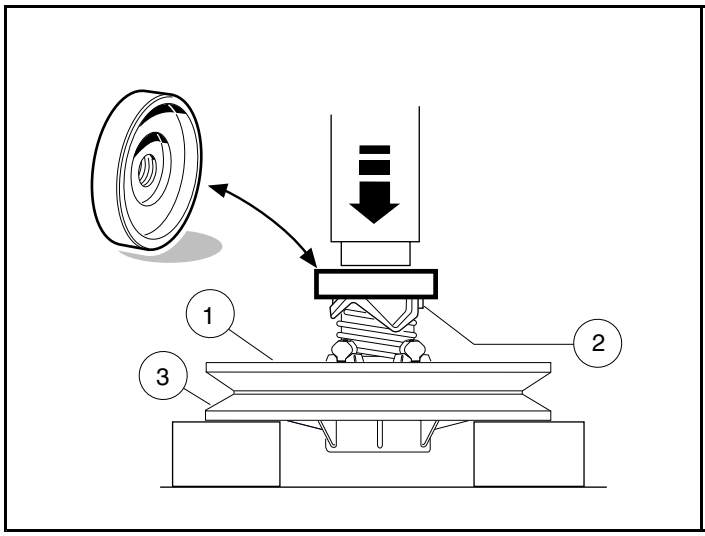

611

Figure 19-22 Cam Press Tool

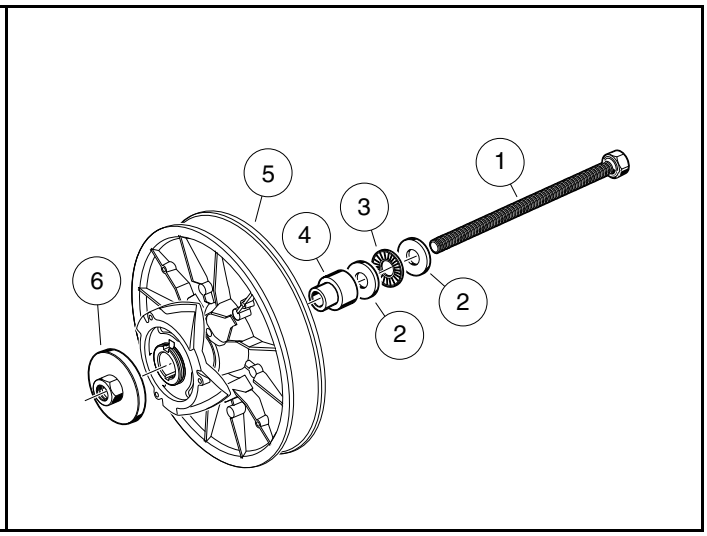

612

Figure 19-23 Cam Installation Tool

5.2. **Field Assembly Process:**

NOTE: *This process is for field assembly requirements where hydraulic and pneumatic press equipment is not available. Use the cam installation tool (P/N 101808401) for this process.*

5.2.1. With the clutch loosely assembled, set the edge of the clutch body (5) on a clean, flat surface **(Figure 19-23, Page 19-16)**.

5.2.2. Assemble the threaded bolt (1) through the washer (2), the thrust bearing assembly (3), the second washer (2), and the hub guide (4).

NOTE: *It is very important that the bolt, washers, and thrust bearing assembly be assembled in the order described and shown.*

5.2.3. Slide the bolt (1) through the clutch body (5) until the threaded bolt, washers, bearing, and hub guide are against the fixed face hub **(Figure 19-23, Page 19-16)**.

5.2.4. Hold the clutch assembly and cam installation tool together and place the fixed face down on spaced blocks **(Figure 19-22, Page 19-16)**.

5.2.5. Place the cam press hub (6) onto the cam installation bolt and thread it down onto the cam hub, centering the press hub onto the cam hub.

5.2.6. Hold the fixed face assembly of the clutch (5) and rotate the moveable face of the clutch one-third turn clockwise.

5.2.7. Use two wrenches, and hold the bolt head while tightening the cam press hub (6) pressing the cam onto the keyed shaft. Advance the press hub until it is firm against the shaft end.

5.2.8. Remove the cam press hub (6) and installation tool, and install the retaining ring.

NOTE: *The retaining ring can be reused if the O.D. does not exceed 1.607 inches (40.82 mm); otherwise, it must be replaced with a new ring (P/N 1014080).*

DRIVEN CLUTCH INSTALLATION

1. To install the driven clutch, reverse the removal procedure. Make sure that the washer (12) is mounted with the flat portion of the washer against the driven clutch **(Figure 19-21, Page 19-15)**. Secure with a new bolt (11). **See following NOTE.**

NOTE: *The bolt (11) must be replaced with a new bolt (P/N 102242101) containing a locking patch that will prevent the bolt from loosening.*

2. Tighten the bolt (11) to 18 ft-lb (24.4 N·m).
3. Connect battery and spark plug wire(s). **See Connecting the Battery – Gasoline Vehicles on page 1-3.**

A

accelerator
  cable
    installation 16-8
    removal 16-7
  pedal
    limit switch function, testing 12-17
    limit switch, testing 11-17
accelerator pedal
  installation 5-9
  removal 5-9
access panel 4-12, 4-16
air box
  removal 16-11
air filter..... 16-1, 16-11
  replacement.....16-11
axle
  bearing
    installation 18-6
    removal 18-5
  shaft
    installation 18-7
    oil seal 18-4
    removal 18-4

B

backrest..... 4-10
backrest and structural accessory module 4-10
bag rack
  installation 4-10
  removal 4-10
basket, sweater 4-10
battery 13-40
  charging 13-43–13-44
  hydrometer test 11-12, 12-12
  installation 13-44
  load test..... 11-14, 12-14
  maintenance 13-41
  mineral content 13-42
  removal 13-43
  self-discharge 13-42
  storage 13-44
  testing 11-12, 11-35, 12-12, 12-35
  vibration damage..... 13-42
  voltage test 11-13, 12-13
  water level 13-42
belt, drive
  see drive belt 19-3
body, front 4-3, 4-9
  installation 4-3
  removal 4-3
  see also repair, front and rear body 4-3
body, rear
  removal 4-9
  see also repair, front and rear body 4-9, 4-14
brake pedal
  installation 5-11
  removal 5-11
brakes
  adjustment..... 6-10
  cable
    installation 6-14
    removal 6-13
  cleaning assembly..... 6-5
  cluster
    installation 6-11
    removal 6-11
  shoe
    installation 6-7
    removal 6-1
breather valve (reed valve).....14-3, 15-3
bumper, front..... 4-5

C

canopy, four-passenger
  installation 4-20
  removal 4-19
canopy, Monsoon
  installation 4-22
  removal 4-22
canopy, two-passenger
  installation 4-19
  removal 4-17
carburetor 16-1
  closed throttle or idle adjustment 16-8
  jet, main..... 16-3
    elevation/size chart 16-3
CAUTION
  definition of 1-1
charger bezel 4-8
charger receptacle bezel
  installation 4-8
  removal 4-8
choke
  choke and air intake system.....16-1, 16-9
cleaning
  brake assembly..... 6-5
  seat..... 4-1
  vehicle body..... 4-1
clutch (torque converter) troubleshoot-
 ing 19-2
clutch, drive
  see drive clutch 19-4
clutch, driven
  see driven clutch 19-13
column, steering
  see steering column 7-2
crankcase cover
  installation 14-6, 15-7
  removal 14-4, 15-5
cylinder head.....14-3, 15-3

D

DANGER
  definition of 1-1

debris shields
Gen. I 5-3
Gen. II 5-9
diagram, schematic 11-6, 12-6
differential
see unitized transaxle 18-8
drive belt
inspection 19-3
installation 19-3
removal 19-3
drive clutch
assembly 19-11
cleaning and inspection 19-6, 19-10
disassembly 19-8
installation 19-12
removal 19-4
drive unit
see unitized transaxle 18-8
driven clutch
assembly 19-15
disassembly 19-14
inspection 19-14
installation 19-17
removal 19-13

E

electrical system 11-11, 12-11
engine ignition circuit 11-11, 12-11
see also ignition coil and ignition testing 11-27, 12-27
see also ignition coil and ignition, testing 11-11, 12-11
engine kill circuit 11-11, 12-11
fuel gauge/sending unit circuit 11-11, 12-11
generator circuit 11-11, 12-11
hour meter circuit 11-11, 12-11
low oil warning light circuit 11-11, 12-11
neutral lockout circuit 11-11, 12-11
reverse buzzer circuit 11-11, 12-11
starter circuit 11-11, 12-11
engine
assembly 14-9, 15-10
ignition circuit 11-11, 12-11
removal 14-3, 15-4
rotation 14-1, 15-1
RPM adjustment 16-8
exhaust system 16-1
see also muffler 16-1

F

floor mat and retainers 4-7
floor mat retainer
installation 4-7
removal 4-7
flywheel
removal 14-7, 15-8
foot deck (four-passenger)
installation 4-15
removal 4-15
forward/reverse
cable
adjustment 18-23
installation 18-21
removal 18-21
handle (lever) 18-1
front body
see body, front 4-3
front bumper 4-5
fuel filter 16-1
installation 16-14
removal 16-14
fuel gauge/hour meter
fuel gauge circuit 11-11, 12-11
testing 11-37, 12-37
fuel level sending unit
testing 11-36, 12-36
installation 13-34–13-35
removal 13-34–13-35
fuel level sending unit 13-35
testing 11-36, 12-36
fuel lines 16-1, 16-20
fuel pump 16-1, 16-15
assembly 16-16
cleaning and inspection 16-16
disassembly 16-15
installation 16-17
removal 16-15
fuel shut-off valve 16-21
fuel tank
disposal 16-19
installation 16-19
removal 16-18
storage 16-19
fuse
installation 13-28
removal 13-28
testing 11-14, 12-14

G

GCOR 5-3
governor
governor system 18-2
governor cable
installation and adjustment 16-6
removal 16-6
ground straps 13-44
testing 11-15, 12-15

H

hour meter circuit 11-11, 12-11

I

ignition
testing 11-24, 12-24
ignition coil
installation 13-39, 14-9, 15-10
removal 13-37, 14-7, 15-8
testing 11-27, 12-27
inspection
drive clutch 19-6
drive clutch parts..... 19-10
driven clutch 19-14
front wheel free play 7-18
fuel pump..... 16-16
shock absorber 9-1
spark plug.....14-2, 15-2
starter/generator
armature 13-7, 13-19
bearing.....13-5, 13-18
brush spring 13-3, 13-15
brushes.....13-2, 13-15
commutator 13-8, 13-20
field coils 13-9, 13-21
instrument panel
installation 4-6
removal 4-6

K

key switch
engine kill circuit testing..... 11-33, 12-33
installation 13-27
removal 13-26
starter circuit 11-11, 12-11
kick plate.....4-8
installation 4-8
removal 4-8
kill circuit, engine
testing 11-18, 11-23, 11-33, 12-23, 12-33
kill limit switch function, engine
testing 12-17

L

leaf spring
see suspension, front and suspension, rear..... 9-2, 9-4
low oil warning light.....11-11, 12-11
installation 13-33
removal 13-33
testing 11-35, 12-35
low oil warning light circuit.....11-11, 12-11
lubrication
front suspension..... 7-11

M

maintenance
battery..... 13-41
muffler
installation 17-1
removal 17-1
see also exhaust system..... 17-1

N

neutral lockout.....11-19, 11-35, 12-19, 12-35, 18-1
cam
installation 13-30
removal 13-30
testing 11-35, 12-35
limit switch
installation 13-29
removal 13-29
testing 11-19, 12-19
neutral lockout circuit 11-11, 12-11
<$nopage>oil light
<SeeAlso>see <default para font>low oil warning light 12-11

O

oil level sensor
installation 13-40, 14-5, 15-6
removal 13-40, 14-5, 15-6
testing 11-34, 12-34
oil light
see low oil warning light.....11-11

P

pawl assembly
Gen. I.....5-3
pedal group
installation
Gen. I 5-6
Gen. II..... 5-11
removal
Gen. I 5-1
Gen. II.....5-7

R

rack and pinion.....7-4
assembly 7-8
disassembly.....7-6
installation 7-9
removal 7-5
rear beauty panel
installation 4-12, 4-16
removal 4-12, 4-16
rear body
see body, rear 4-9, 4-14
rear body, four-passenger 4-14
rear body, two-passenger.....4-9

rear suspension
see suspension, rear 9-1
rear underbody
installation 4-12, 4-17
removal 4-12, 4-17
repair
front and rear body
gouges, punctures, tears 4-3
minor impact damage/deformations..... 4-2
minor scratches and surface blemishes 4-3
stress lines or streaks..... 4-2
tire..... 8-2
reverse buzzer 11-11, 11-34, 12-11, 12-34
installation 13-31
limit switch
installation 13-32
removal 13-32
removal 13-31
testing 11-34, 12-34
RPM adjustment..... 16-8
RPM limiter
installation 13-36
removal 13-36
testing 11-26, 12-26

S

safety..... 1-1
safety committee 3-2
SAM
installation 4-10
removal 4-10
schematic diagram..... 11-6, 12-6
seat back (four-passenger)
installation 4-14
removal 4-14
seat support (four-passenger)
installation 4-15
removal 4-14
serial number, vehicle 3-1
service tools
torque converter kit..... 19-1
unitized transaxle 18-3
shock absorber
see suspension, front and suspension, rear..... 9-1
solenoid
installation 13-27
removal 13-27
testing 11-18, 12-18
spark plug 14-2, 15-2, 16-1
cleaning, inspection and repair..... 14-2, 15-2
gap adjustment 14-2, 15-2, 16-1
installation 14-3, 15-3
removal 14-2, 15-2
testing 14-2, 15-2
specifications
torque..... 14-11, 15-12
vehicle..... 2-1
spring
accelerator return
Gen. I 5-4
brake return
Gen. I 5-3
starter/generator
armature..... 13-4, 13-17
ground test 13-8, 13-20
armature inspection..... 13-7, 13-19
assembly 13-4, 13-10, 13-16, 13-21
bearing
cleaning 13-5, 13-18
inspection..... 13-5, 13-18
removal 13-6, 13-18
belt tension adjustment..... 13-11, 13-23
brush spring
inspection..... 13-3, 13-15
replacement 13-3, 13-15
brushes 13-2, 13-14
inspection..... 13-2, 13-15
replacement 13-2, 13-15
commutator..... 13-4, 13-17
armature replacement 13-8, 13-20
cleaning 13-8, 13-20
inspection..... 13-8, 13-20
disassembly..... 13-2, 13-4, 13-14, 13-17
field coil
inspection..... 13-9, 13-21
removal 13-6, 13-18
installation 13-11, 13-22
removal 13-1, 13-13
rework 13-9, 13-21
testing 11-20–11-21, 12-20–12-21
steering
rack and pinion
assembly..... 7-8
disassembly 7-6
installation 7-9
removal 7-5
steering column 7-2
disassembly..... 7-2
installation 7-4
removal 7-2
steering wheel
installation 7-2
removal 7-1
stress lines
see repair, front and rear body..... 4-2
suspension, front
camber adjustment..... 7-11
components
control arm, installation..... 7-15
control arm, removal 7-15
kingpin and steering spindle, installation 7-14
kingpin and steering spindle, removal 7-14
leaf spring removal..... 7-14
leaf spring, installation..... 7-14
shock absorber, installation..... 7-15

shock absorber, removal 7-15
tie rod end, removal 7-13
tie rod, installation 7-13
wheel bearings and hub, inspection 7-18
wheel bearings and hub, installation 7-18
wheel bearings and hub, removal 7-18
lubrication 7-11
toe-in adjustment 7-12
wheel alignment 7-11
suspension, rear
shock absorber
inspection and removal 9-1
installation 9-1
suspension, rear (four-passenger)
leaf spring
installation 9-5
removal 9-4
suspension, rear (two-passenger)
leaf spring
installation 9-3
removal 9-2
sweater basket 4-10

T

test procedure
accelerator pedal limit switch 11-17
accelerator pedal limit switch function 12-17
battery 11-12, 11-35, 12-12, 12-35
engine kill circuit 11-18, 11-23, 12-23
engine kill circuit wire 11-33, 12-33
engine kill limit switch function 12-17
fuel gauge 11-37, 12-37
fuel level sending unit 11-36, 12-36
fuse 11-14, 12-14
ground straps 11-15, 12-15
ignition test 11-24, 12-24
key switch
engine kill circuit 11-33, 12-33
low oil warning light 11-35, 12-35
neutral lockout
cam 11-35, 12-35
limit switch 11-19, 12-19
oil level sensor 11-34, 12-34
reverse buzzer 11-34, 12-34
reverse buzzer limit switch 11-34, 12-34
RPM limiter 11-26, 12-26
solenoid 11-18, 12-18
starter/generator 11-20–11-21, 12-20–12-21
voltage regulator 11-22, 12-22
wire continuity 11-21, 12-21
test procedures, index of 11-11, 12-11
test procedures, pedal-start gasoline vehicle
ignition coil 11-27, 12-27
testing
spark plug 14-2, 15-2
starter/generator
ground test 13-8, 13-20
throttle position sensor 5-9
tie rod and drag link
installation 7-13
removal 7-11
tire
installation 8-3
removal 8-2
repair 8-2
tools
see service tools 18-3
torque converter
troubleshooting 19-2
troubleshooting
torque converter 19-2
vehicle troubleshooting guide 11-1, 12-1

U

unitized transaxle
installation 18-16
lubrication 18-3
removal 18-8
service 18-2
universal accessory mounting 4-9

V

Valve Clearance Check and Adjustment 15-3
voltage regulator
installation 13-25
removal 13-25
testing 11-22, 12-22

W

WARNING
definition of 1-1
wheel
installation 8-1
removal 8-1
see also tire 8-1
wheel liner
installation 4-12
removal 4-12
wheel, steering
see steering wheel 7-1
wire
continuity testing 11-21, 12-21
wiring diagram 11-6, 12-6

Your Comments Are Appreciated

Contact Information (Optional):

Name: _____
Title/Company: _____
Address: _____
_____
City: _____ State: _____ Zip: _____
Phone: _____ Fax: _____
E-mail: _____

I am:

- ☐ Distributor/Dealer
- ☐ Individual Owner
- ☐ Club Car Associate/Representative
- ☐ Technician
- ☐ Golf Course Superintendent
- ☐ Other: _____

Rate Our Publication:

In order to help us better serve you, please rate this publication in the following categories:

	Poor	Fair	Average	Good	Excellent
1. Ease of Understanding	☐	☐	☐	☐	☐
2. Ease of Finding Information	☐	☐	☐	☐	☐
3. Clarity of Illustrations/Photos	☐	☐	☐	☐	☐
4. Index Usability	☐	☐	☐	☐	☐

5. If you are reviewing a Kit Instruction, were all indicated parts included in your kit? Yes / No

Your Comments and Suggestions:

_____
_____
_____
_____
_____
_____
_____
_____
_____
_____
_____
_____
_____

Please send a copy of this page to:
Fax: (706) 228-2662 or
E-mail: Tech_Pubs@clubcar.com

Thank You!
Club Car's Technical Publications Department

Club Car, LLC
P.O. Box 204658
Augusta, GA 30917-4658
USA

Web www.clubcar.com
Phone 1.706.863.3000
1.800.ClubCar
Int'l +1 706.863.3000
Fax 1.706.863.5808

Ingersoll Rand
Industrial Technologies