G14-A, G14-E
GOLF CAR SERVICE MANUAL

G14A, G14E
SERVICE MANUAL
1999 by Yamaha Motor Manufacturing
Corporation of America
3rd edition, June 1999
Printed in U.S.A.
P/N/ LIT-19616-00-00

(Rev. 8/96) (Rev. 6/99)

INTRODUCTION

This manual has been written by Yamaha Motor Manufacturing Corporation of America for use by Authorized Yamaha dealers and their qualified mechanics. It is not possible to put an entire mechanic's education into a manual, so it is assumed that persons using this book to perform maintenance and repairs on Yamaha golf cars have a basic understanding of the mechanical concepts and procedures inherent to these products. Without such knowledge, attempted repairs or service to this golf car may render it unfit to use and/or unsafe.

Yamaha Motor Manufacturing Corporation of America is continually striving to further improve all models manufactured by the company. Modifications are therefore inevitable and will, where applicable, appear in future editions of this manual.

TECHNICAL SERVICE DEPT
GOLF CAR SALES GROUP
YAMAHA MOTOR
MANUFACTURING CORP OF
AMERICA

HOW TO USE THIS MANUAL

Read This Important Information!

Particularly important information in this manual is distinguished by the following notations:

⚠ The Safety Alert Symbol means ATTENTION! BE ALERT! YOUR SAFETY IS INVOLVED!

⚠ WARNING **Failure to follow WARNING instructions could result in severe injury or death to golf car occupants, a bystander, or a person inspecting or repairing the golf car.**

CAUTION **This message describes special precautions that must be taken to avoid damage to the golf car.**

NOTE: This message provides additional key information.

MANUAL FORMAT

All of the procedures in this manual are organized in a sequential, step-by-step format. The information has been compiled to provide the mechanic with an easy to read, handy reference that contains comprehensive explanations of all disassembly, repair, assembly, and inspection operations.
In this revised format, the condition of a faulty component will precede an arrow symbol and the course of action required will follow the symbol, e.g.,

- Bearings:
  Pitting/Damage → Replace.

EXPLODED DIAGRAM

Each chapter provides exploded diagrams before each disassembly section for ease in identifying correct disassembly and assembly procedures.

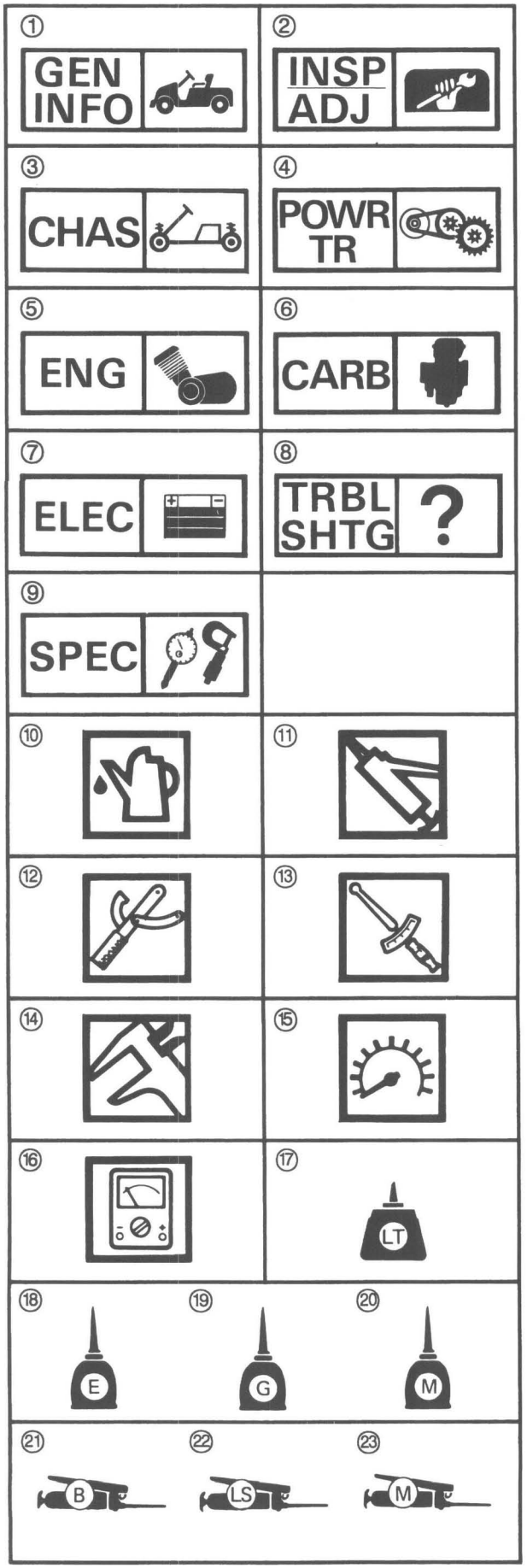

Symbol Identification

Symbols ① to ⑨ are designed as thumb tabs to indicate the contents within a chapter.

① General information
② Periodic inspection and adjustment
③ Chassis
④ Power train
⑤ Engine overhaul
⑥ Carburetion
⑦ Electrical
⑧ Troubleshooting
⑨ Specifications

Symbols ⑩ to ⑯ are used to identify specifications within the text.

⑩ Filling fluid
⑪ Lubricant
⑫ Special tool
⑬ Tightening torque
⑭ Wear limit, clearance
⑮ Engine speed
⑯ Ω, V, A

Symbols ⑰ to ㉓ are used in the exploded diagrams to indicate the grade and location of lubricant.

⑰ Apply locking agent
⑱ Apply engine oil
⑲ Apply gear oil
⑳ Apply molybdenum disulfide oil
㉑ Apply wheel bearing grease
㉒ Apply lightweight lithium soap base grease
㉓ Apply molybdenum disulfide grease

INDEX

CHAPTER 1
GENERAL INFORMATION

SAFETY PRECAUTIONS

⚠ WARNING

Follow these safety precautions and exercise caution when performing service work to prevent serious accidents.

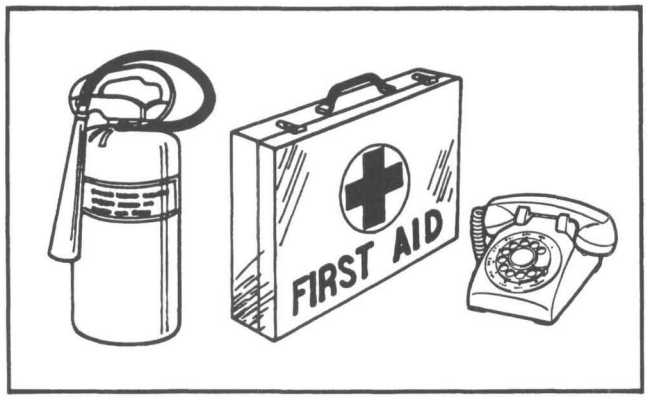

PREPARE FOR EMERGENCIES

Be prepared for possible injury or fire. Keep the following items handy:

- First aid kit
- Fire extinguisher
- Emergency phone numbers

HANDLE FUEL SAFELY

Use care when handling fuel – it is highly flammable. Do not smoke or have open flames or sparks nearby when handling fuel.

Always clean up spilled fuel and dispose of cleaning materials properly.

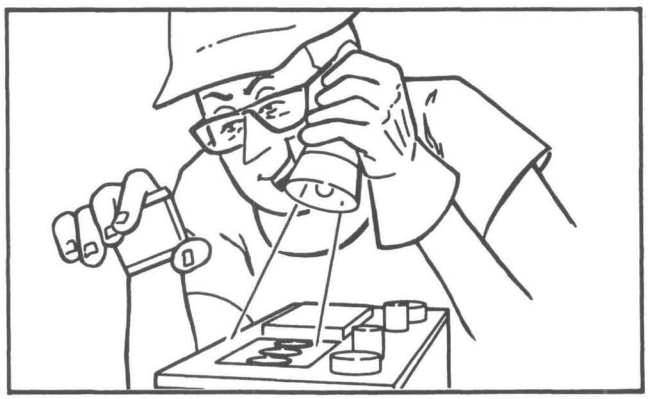

HANDLE BATTERIES SAFELY

Batteries produce explosive gases. Keep sparks and flames away from batteries. Check battery electrolyte level using a flashlight.

Never check battery state of charge by connecting the battery posts with a conductor. Use a voltmeter or hydrometer. Always disconnect the negative (–) cable first and connect it last.

Do not charge a battery if the battery is frozen. Allow the battery to warm first.

Always charge batteries in a well ventilated area to prevent the build-up of explosive hydrogen gas which is created when batteries are being charged.

Battery electrolyte contains sulfuric acid and is poisonous and highly caustic. Avoid contact with skin, eyes, or clothing. If electrolyte contacts the eyes, flush with water for 15 minutes and get prompt medical attention.

WEAR PROTECTIVE CLOTHING

Many permanent injuries could be prevented by wearing appropriate safety equipment during work. Whenever applicable, put on the following:

- **Safety glasses with side shields or goggles** when performing work like grinding, chiseling, spraying or any other activity that could result in an object or chemical striking the eye
- **Earmuffs or earplugs** when performing loud work that could harm hearing
- **Safety shoes** when working with heavy objects that could be dropped
- **Respiratory protection** when performing work involving dust, vapors, or gases that can cause respiratory problems

Avoid wearing loose clothing and jewelry which could become caught in moving parts causing injury.

KEEP WORK AREA CLEAN

Properly ventilate work area to prevent build-up of dangerous gases and keep the oxygen level above OHSA's 19.5 percent minimum level.

Keep shop floor clean and dry to prevent accidents due to slips.

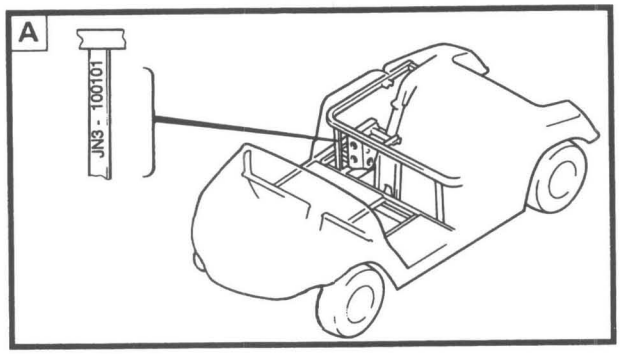

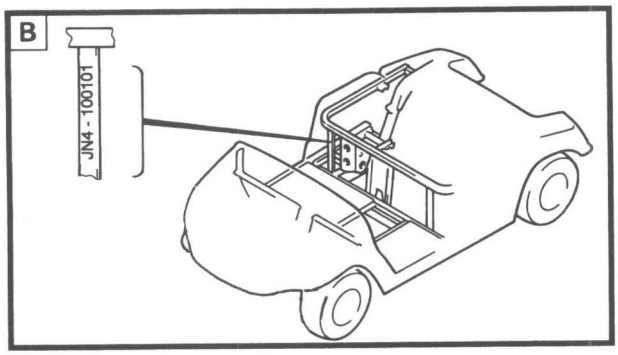

GENERAL SERVICE INFORMATION

FRAME SERIAL NUMBER

The machine serial number is stamped in the location shown.

A G14-A

B G14-E

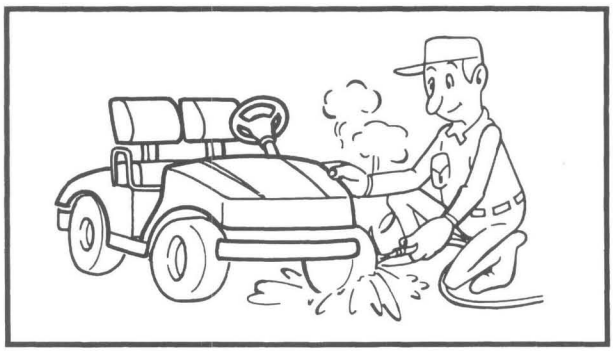

WASHING AND CLEANING

Before servicing, thoroughly clean the exterior of the car body and engine. While cleaning, take care to protect the electrical parts, such as relay switches, motor, resistors, controllers, etc., from high pressure water splashes.

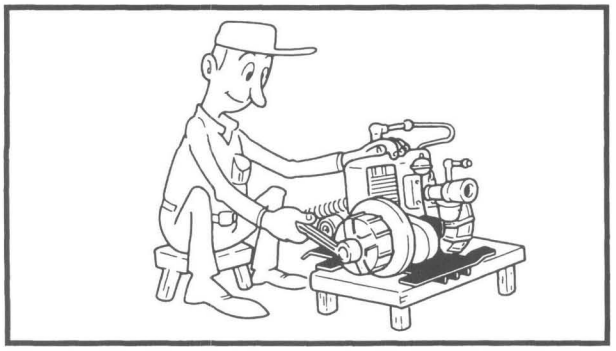

RIGHT TOOLS

Be sure to use the right special tool for the right part in order to protect the part from damage.

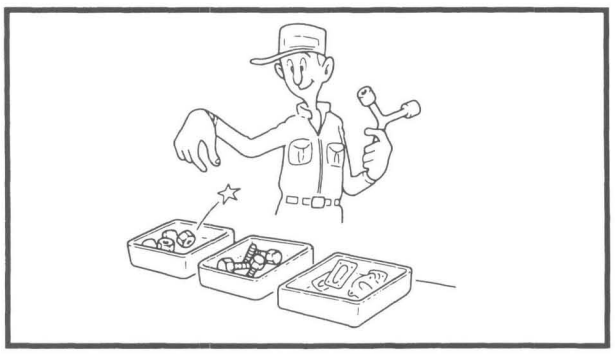

KEEP IT NEAT

Keep the removed parts organized in separate groups so that they will not be misplaced.

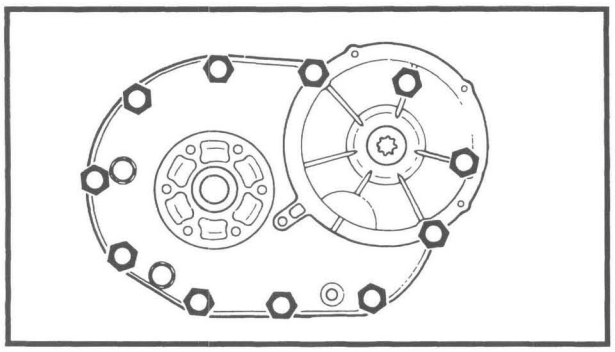

TIGHTENING TORQUE

Be sure to follow tightening torque specifications. When tightening bolts, nuts, and screws, start with larger-diameter ones and work from inner-positioned ones to outer-positioned ones in a criss-cross pattern. Refer to "Tightening Torque" section of CHAPTER 9.

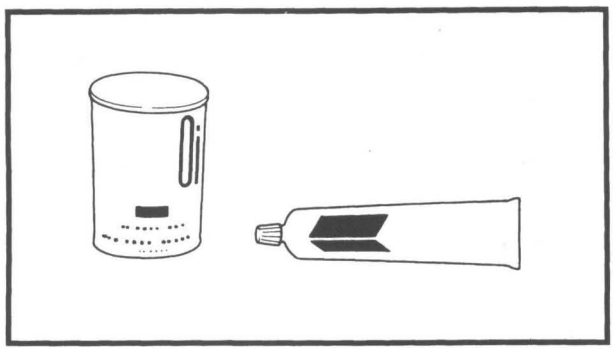

ALL REPLACEMENT PARTS

We recommend you use Yamaha genuine parts for all replacements. Use oil and/or grease recommended by Yamaha for assembly and adjustment.

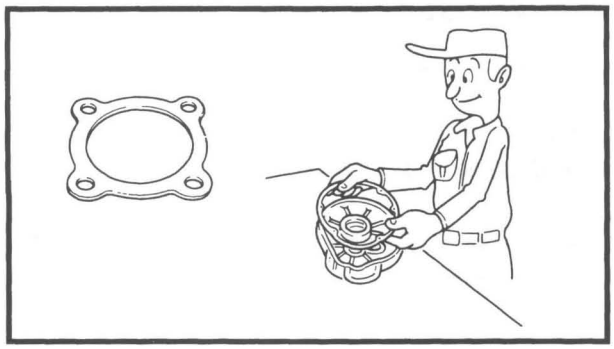

GASKETS, OIL SEALS, AND O-RINGS

All gaskets, seals, and O-rings should be replaced when an engine is overhauled. All gasket surfaces, oil seal lips, and O-rings must be cleaned.

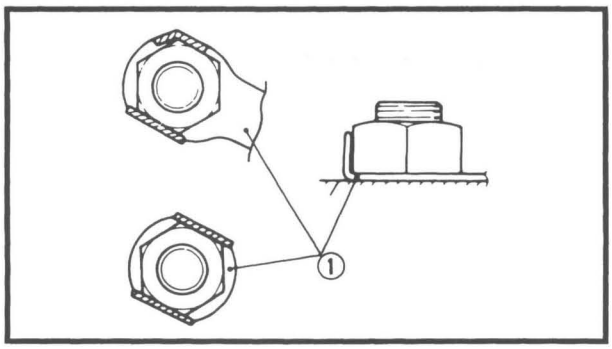

LOCK WASHERS/PLATES AND COTTER PINS

All lock washers/plates ① and cotter pins must be replaced when they are removed. Lock tabs should be bent along the bolt or nut flats after the bolt or nut has been properly tightened.

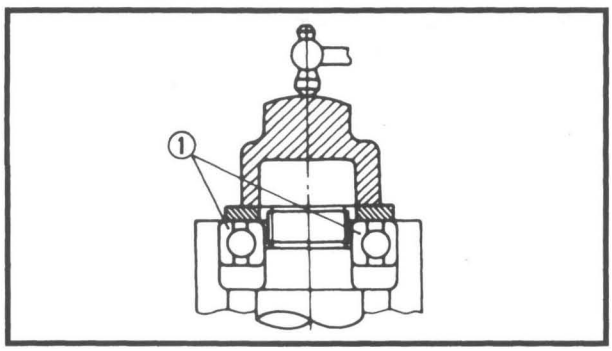

BEARINGS AND OIL SEALS

Install bearings ① and oil seals ② with their manufacturer's marks or numbers facing outward. (In other words, the stamped letters must be on the side exposed to view.) When installing oil seals, apply a light coating of light-weight lithium base grease to the seal lip(s). Oil the bearings liberally when installing.

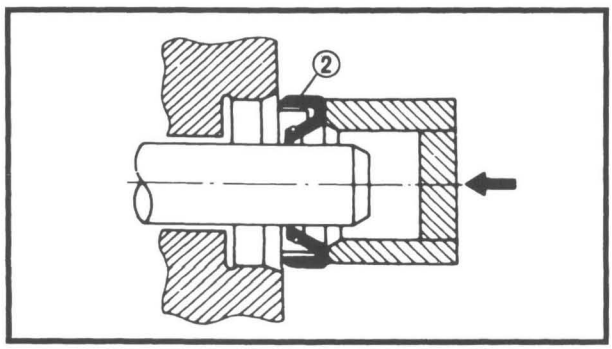

CAUTION

Do not use compressed air to spin the bearings dry. This causes damage to the bearing surfaces.

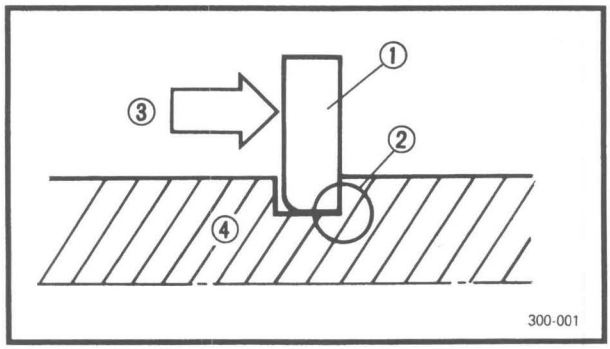

CIRCLIPS

All circlips should be inspected carefully before reassembly. Always replace piston pin clips after one use. Replace distorted circlips. When installing a circlip ①, make sure that the sharp-edged corner ② is positioned opposite to the thrust ③ it receives.

④ shaft

DISASSEMBLY AND ASSEMBLY SUGGESTIONS

Follow these guidelines when disassembling and assembling parts:

- Clean and dry parts whenever they are disassembled.

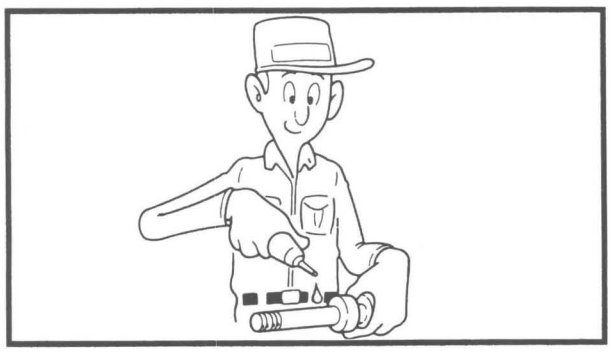

- Oil contact surfaces of moving parts when they are assembled.

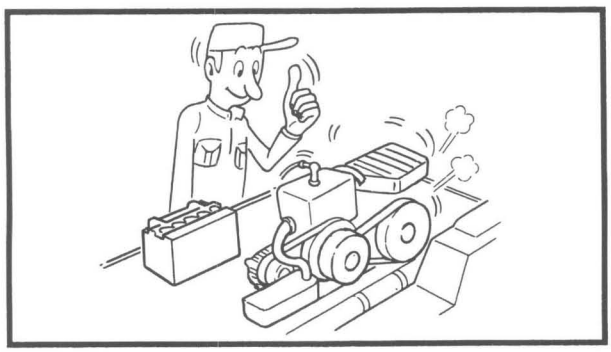

- After parts are assembled, make sure each of the moving parts operates normally.

SPECIAL TOOLS

The proper special tools are necessary for complete and accurate tune-up and assembly. Using the correct special tool will help prevent damage caused by the use of improper tools or improvised techniques. To order the tools specified on the following pages, please contact Kent-Moore for pricing and availability at: 1-800-345-2233.

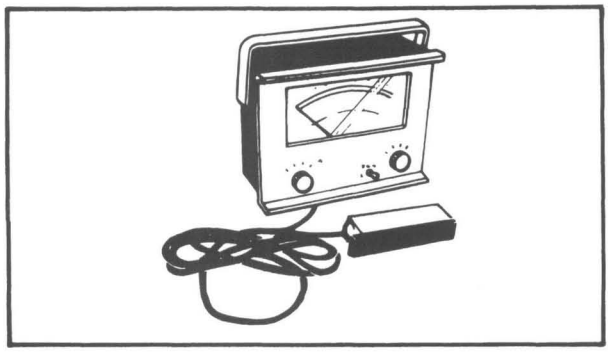

FOR TUNE UP

1. Inductive Tachometer
   P/N YU-8036-A

This tool is for measuring engine rpm.

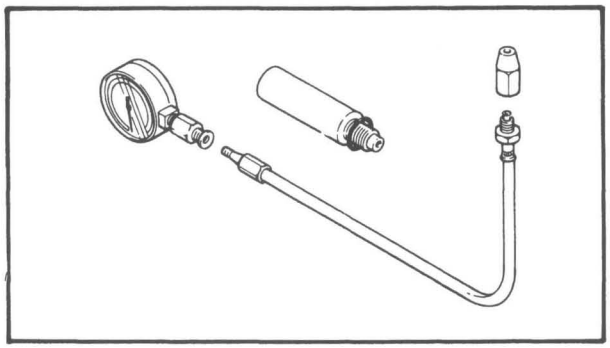

2. Compression Gauge
   P/N YU-33223

This gauge is used to measure the engine compression.

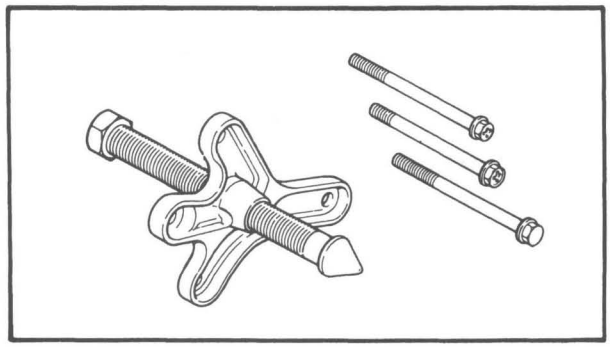

FOR ENGINE SERVICE

1. Heavy-Duty Universal Puller
   P/N YU-33270-B

This tool is used to remove the flywheel.

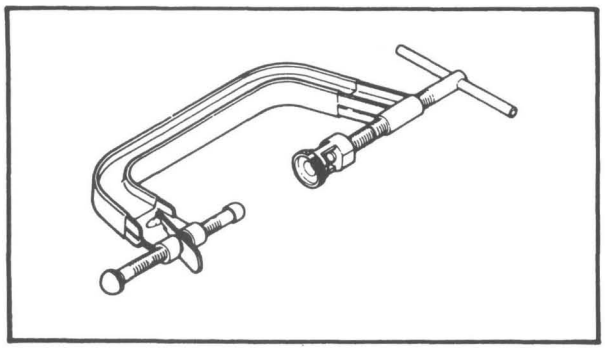

2. Valve Spring Compressor
   P/N YM-1253

This tool is needed to remove and install the valve assemblies.

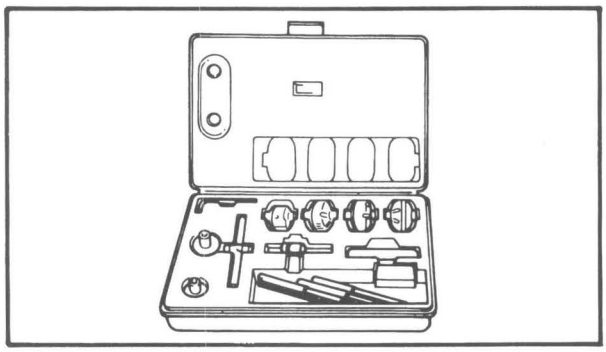

3. Valve Seat Cutter Set
   P/N YM-91043-C

This tool is used to resurface the valve seat.

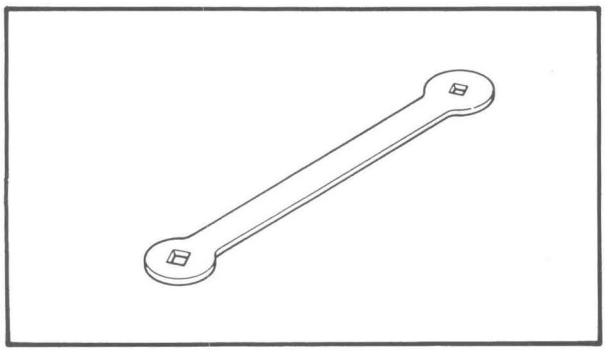

4. Valve Adjuster
   P/N YM-08035

This tool is used to adjust the valve clearance.

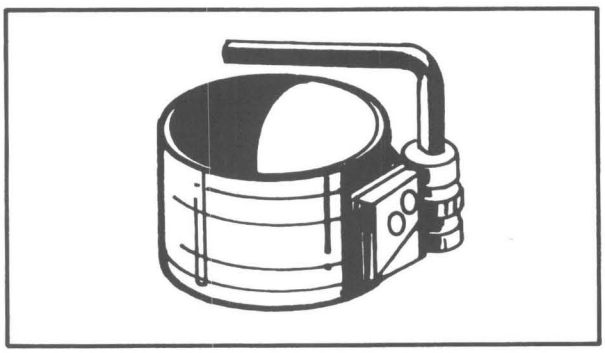

5. Piston Ring Compressor
   P/N YU-33294

This tool is used to squeeze ring ends together while piston is pushed into cylinder.

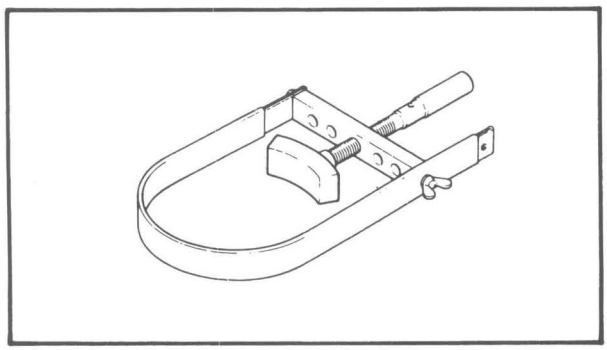

FOR POWER TRAIN

1. Primary Sheave Holder
   P/N YS-1880-A

This tool is used to hold the primary sheave when removing or installing the primary sheave securing bolt.

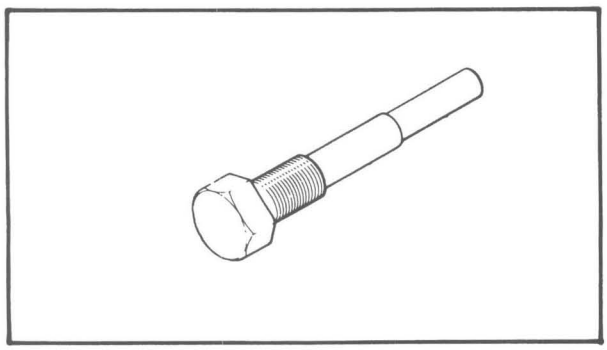

2. Primary Sheave Puller
   P/N YG-1876

This tool is used for removing the primary sheave.

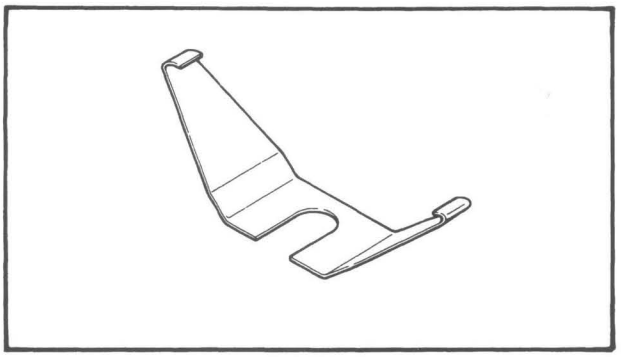

3. Secondary Sheave Holder
   P/N YG-40103-A

This tool is used to compress the sheave spring when removing or installing the secondary sheave securing nut.

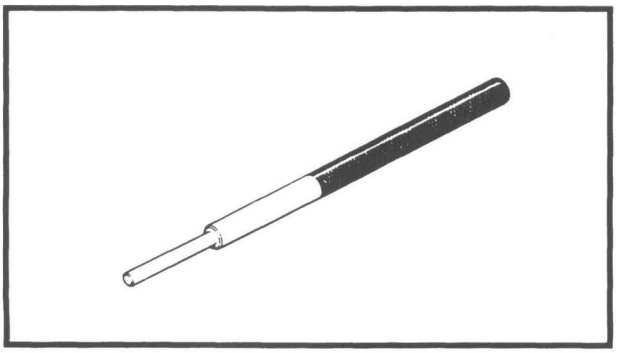

FOR CHASSIS SERVICE

1. Drift punch (6 mm) or Valve Guide Remover
   P/N YM-4064-A

This tool is used to remove the spring pins for steering knuckle.

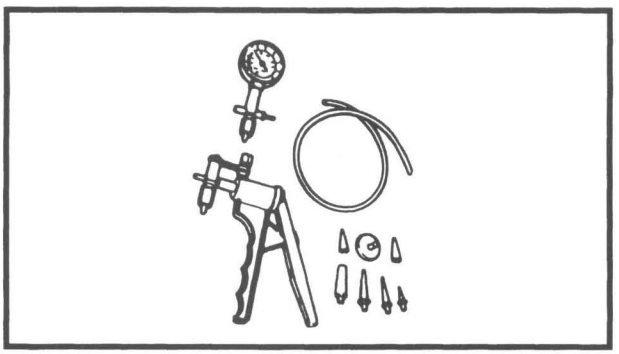

2. Mityvac® Pressure Tester
   P/N YB-35956-A

This tool is used for vacuum pressure testing.

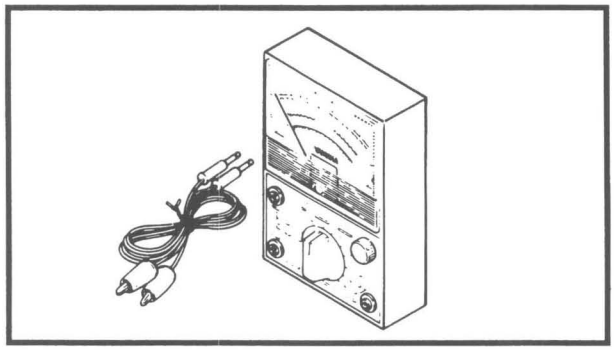

FOR ELECTRICAL COMPONENTS

1. Pocket Tester
   P/N YU-3112-C

This instrument is invaluable for checking the electrical system.

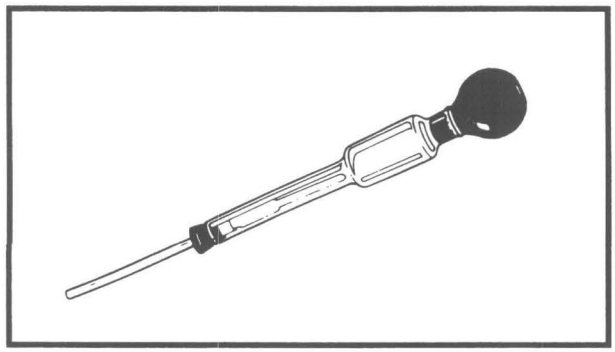

2. Hydrometer
   P/N YU-03036

This gauge is used to measure the specific gravity of battery electrolyte.

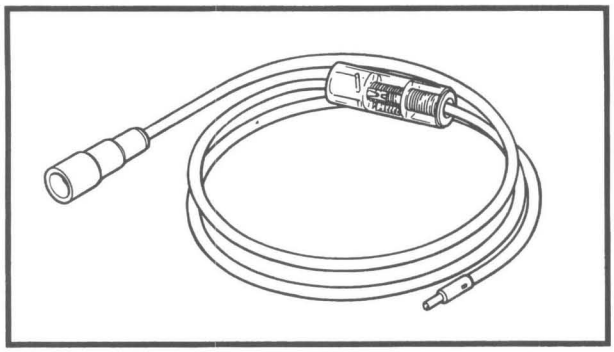

3. Dynamic Spark Tester
   P/N YM-34487

This tester is necessary for checking the ignition system components.

CHAPTER 2
PERIODIC INSPECTION AND ADJUSTMENT

PERIODIC INSPECTION AND ADJUSTMENT

PERIODIC MAINTENANCE

Regular maintenance is most important for best performance and safe operation.

⚠ WARNING

Be sure to turn off the main switch and apply the parking brake when you perform maintenance unless otherwise specified.

FOR G14A

C - CHECK CA - CHECK AND ADJUST R - REPLACE S - SERVICE CL - CLEAN AND LUBRICATE L - LUBRICATE

	Remarks	Pre-Operation	20 Rounds 20 hours 100 miles 160 kms (Every month)	125 rds 125 hrs 600 mls 1000 kms (Every 6 months)	250 rds 250 hrs 1200 mls 2000 kms (Every year)	500 rds 500 hrs 2500 mls 4000 kms (Every 2 years)	1000 rds 1000 hrs 5000mls 8000 kms (Every 4 years)
PRE-OP	Check engine oil	C	C	C			
	Check air cooling duct	C	C	C	C	C	C
	Check fuel lines for leakage	C	C	C	C	C	C
	Check fuel level	C	C	C	C	C	C
	Check for looseness and corrosion of battery terminals and hold downs	C	C	C	C	C	C
EVERY MONTH	Check fuel filter for clogging		C	C	C	C	C
	Check wear of drive belt		C	C	C	C	C
	Check operation of forward/reverse shifting		C	C	C	C	C
EVERY 6 MONTHS	Wash pre-filter, check air cleaner element			S	S	S	S
	Check spark plug and plug cap condition** / Check compression			C	C	C	C
EVERY YEAR	Replace engine oil				R	R	R
	Adjust throttle cables,** choke cable, check carburetor throttle shaft for wear**				CA	CA	CA
	Check starter V-belt for damage and tension				C	C	C
	Check drive belt for slippage, wear or scratches				C	C	C
	Check sliding sheave and ramp shoes; Grease secondary sheave bearing.				CL	CL	CL
	Grease primary sheave				L	L	L
	Check operation of speed limiter				C	C	C

**Related to emission control system.

FOR G14A

C - CHECK CA - CHECK AND ADJUST R - REPLACE S - SERVICE CL - CLEAN AND LUBRICATE L - LUBRICATE

	Remarks	Pre-Operation	20 Rounds 20 hours 100 miles 160 kms (Every month)	125 rds 125 hrs 600 mls 1000 kms (Every 6 months)	250 rds 250 hrs 1200 mls 2000 kms (Every year)	500 rds 500 hrs 2500 mls 4000 kms (Every 2 years)	1000 rds 1000 hrs 5000mls 8000 kms (Every 4 years)
EVERY YEAR	Apply battery terminal protectant				S	S	S
	Check wiring connections and insulation				C	C	C
EVERY 2 YEARS	Check brushes for wear and commutator for dirt					C	S
EVERY 4 YEARS	Replace fuel filter and fuel hoses						R
	Check tightness of cylinder head / Adjust valves						CA

FOR G14E

C - CHECK CA - CHECK AND ADJUST R - REPLACE S - SERVICE CL - CLEAN AND LUBRICATE L - LUBRICATE

	Remarks	Pre-Operation	20 Rounds 20 hours 100 miles 160 kms (Every month)	125 rds 125 hrs 600 mls 1000 kms (Every 6 months)	250 rds 250 hrs 1200 mls 2000 kms (Every year)	500 rds 500 hrs 2500 mls 4000 kms (Every 2 years)	1000 rds 1000 hrs 5000mls 8000 kms (Every 4 years)
PRE-OP	Charge	S	S	S	S	S	S
	Clean tops, check for tightness of hold-down screws and terminals	S	S	S	S	S	S
EVERY MONTH	Check electrolyte level		C	C	C	C	C
	Check for loose or broken connections		C	C	C	C	C
EVERY 6 MONTHS	Check all wire insulation for cracks and/or worn spots			C	C	C	C
EVERY YEAR	Perform a discharge test				S	S	S
	Apply terminal protectant				S	S	S

FOR G14A & G14E

C - CHECK CA - CHECK AND ADJUST R - REPLACE S - SERVICE CL - CLEAN AND LUBRICATE L - LUBRICATE

	Remarks	Pre-Operation	20 Rounds 20 hours 100 miles 160 kms (Every month)	125 rds 125 hrs 600 mls 1000 kms (Every 6 months)	250 rds 250 hrs 1200 mls 2000 kms (Every year)	500 rds 500 hrs 2500 mls 4000 kms (Every 2 years)	1000 rds 1000 hrs 5000mls 8000 kms (Every 4 years)
PRE-OP	Check brake pedal freeplay and adjust if necessary	C	CA	CA	CA	CA	CA
	Check steering operation	C	C	C	C	C	
	Check tire pressure, tread depth, tire surface for damage	C	CA	CA	CA	CA	CA
	Check body and chassis for damage	C	C	C	C	C	C
	Check tightness of all bolts, nuts, and screws	C	C	C	C	C	C
	Check reverse buzzer operation	C	C	C	C	C	C
EVERY MONTH	Clean / Lube pedal control area		CL				
EVERY 6 MONTHS	Check shock absorbers for oil leaks and damaged springs			C	C	C	C
EVERY YEAR	Check shoe lining thickness and rear axle bearing play				C	C	C
	Check kingpin play, seal, and cap / Adjust wheel alignment				CA	CA	CA
	Check wheel nut tightness, front wheel bearing play				C	C	C
	Check gear box oil level and leakage				C	C	C
	Check operation and adjust pedal stop if necessary				CA	CA	CA
EVERY 4 YEARS	Replace gear box oil						R
	Check for grease leakage; adjust gearbox if necessary						CA

CAUTION

Keep high pressure water away from all electrical parts.

NOTES

NOTES

INSPECTION AND ADJUSTMENT ENGINE (G14-A)

VALVE CLEARANCE ADJUSTMENT

NOTE:

Valve clearance must be measured when the engine is cool to the touch.

1. Remove the seat.
2. Position:
   - Shift lever to neutral position.
3. Disconnect:
   - Crankcase breather hose ①
   - Oil delivery hose ②
   - Spark plug lead ③

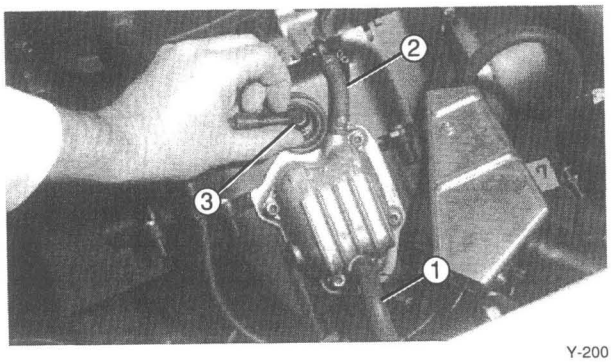

Y-200

4. Remove:
   - Spark plug
   - Cylinder head cover ④
5. Set the piston at top dead center (TDC) on compression stroke.

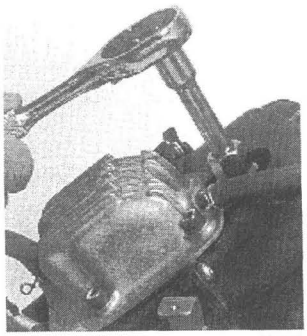
Y-201

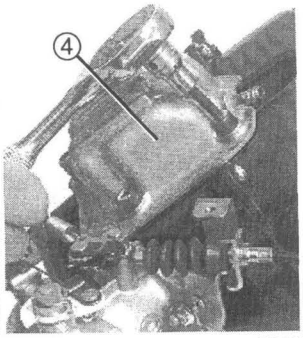

Y-202

NOTE:

Measure and adjust valve clearance when piston is at TDC on compression stroke only.

How to set the TDC on compression stroke:

- Set the piston at TDC.

NOTE:

You can find TDC by inserting a screwdriver into the spark plug hole and rotating the prima ry sheave until the screwdriver reaches its high-est position.

- Paint matching marks onto the sheave and crankcase.
- Rotate the sheave counterclockwise half a turn from the TDC position.

If intake rocker arm ① moved → Rotate sheave another 1/2 turn and you will be at TDC on compression stroke. If both rocker arms did not move → Return sheave to its initial position (this is TDC, compression stroke.)


Y-203

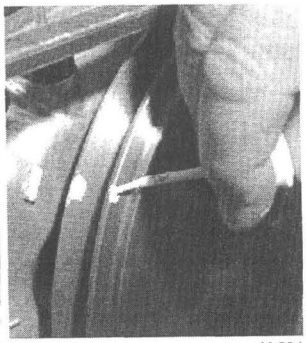
Y-204

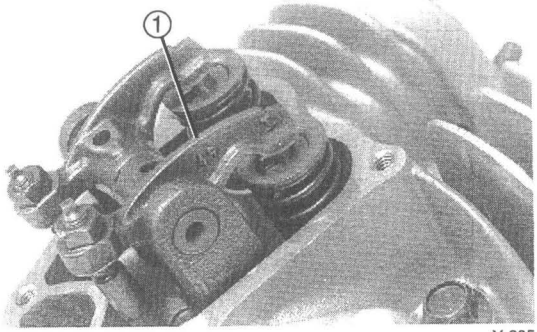

Y-205

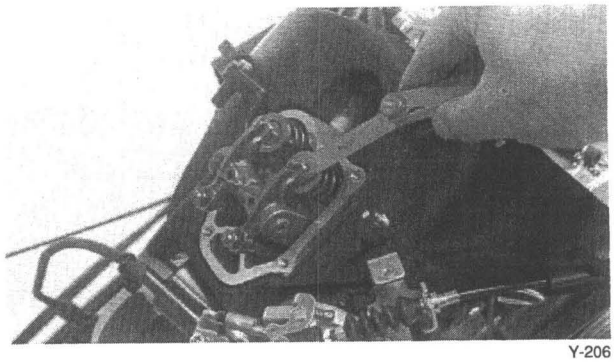

Y-206

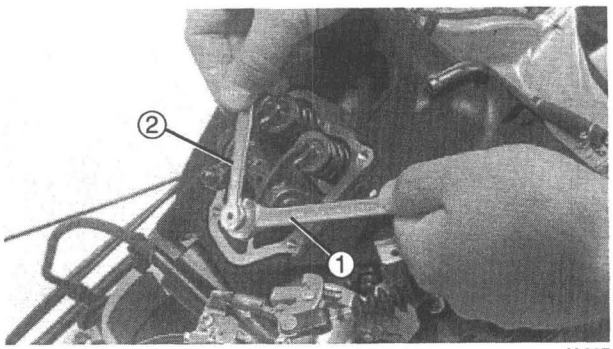

Y-207

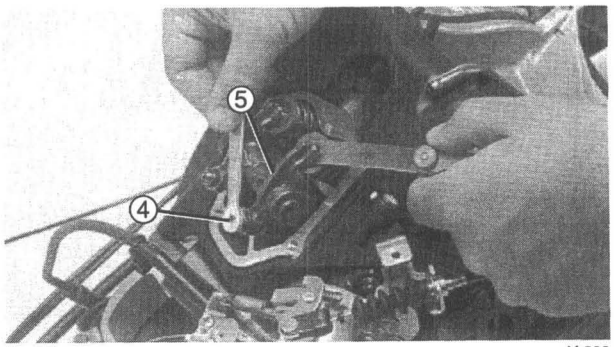

Y-208

6. Measure:
   - Valve clearance
     Use feeler gauge
     Out of specification → Adjust.

Intake Valve (Cold):
0.1 mm (0.004 in)
Exhaust Valve (Cold):
0.1 mm (0.004 in)

Valve clearance adjustment steps:

- Loosen the locknut ① while holding the adjusting screw with Valve Adjuster ②.

Valve Adjuster:
YM-08035, 90890-01311

- Insert the feeler gauge (specified thickness).
- Screw in the adjusting screw ④ until the rocker arm ⑤ contacts feeler gauge lightly.
- Tighten the locknut ① while holding the adjusting screw with Valve Adjuster ②.

NOTE:
Check feeler gauge fit. It should have a noticeable drag but not require excessive force.

- Rotate primary sheave two complete revolutions, and recheck valve clearance specification. Perform adjustment steps over if necessary.

Locknut:
14 Nm (1.4 m • kg, 10 ft • lb)

NOTE:
Before replacing the cylinder head cover, thoroughly clean all gasket material from sealing surfaces.

7. Install:
   - Cylinder head cover with new gasket
   - Spark plug
   - Oil delivery hose
   - Crankcase breather hose
   - Spark plug lead

Bolts (Cylinder Head Cover):
10 Nm (1.0 m • kg, 7.2 ft • lb)

Spark Plug:
20 Nm (2.0 m • kg, 14 ft • lb)

ENGINE OIL LEVEL MEASUREMENT

1. Place the vehicle on a level surface.
2. Inspect:
   - Engine oil level
     Below MIN mark → Add sufficient oil.

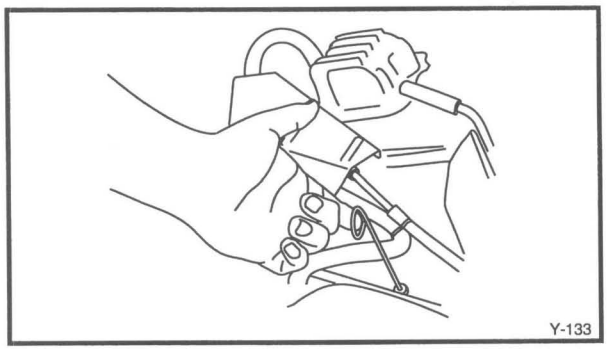
Y-133

Engine oil level measurement step:
- Place vehicle on level surface.
- Remove the seat.
- Remove the dipstick ①, and wipe it with clean rag.
- Insert the dipstick into the crankcase until it firmly seats in place.
- Pull up the dipstick, and make sure the oil level is between the MAX and MIN level.

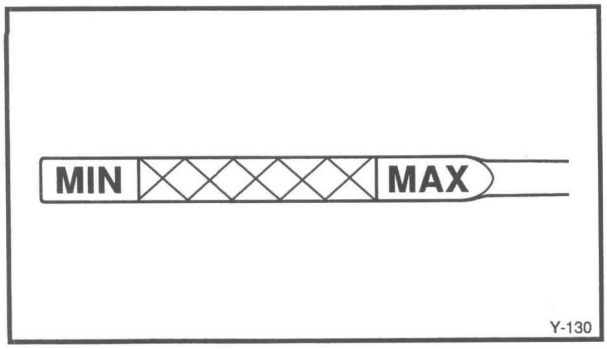

Y-130

NOTE:
The distance between the dipstick marks represents approx. 1/2 US qt (1/2 L) of oil.

Recommended Oil:
YAMALUBE 4-cycle oil or SAE 10W30 [If temperature does not go below 2°C (35°F): SAE 20W40]
Oil Change Quantity:
0.9 L (1.0 US qt, 0.19 Imp gal)
Oil Capacity:
1.1 L (1.16 US qt, 0.24 Imp gal)

NOTE:
Recommended engine oil classification; API Service "SE", "SF", or "SG" type or equivalent.

CAUTION
Do not allow foreign material to enter the engine, and use care not to fill past the MAX dipstick mark.

ENGINE OIL REPLACEMENT

1. Place the vehicle on a level surface.
2. Warm up the engine for several minutes, then place an oil pan under the engine.

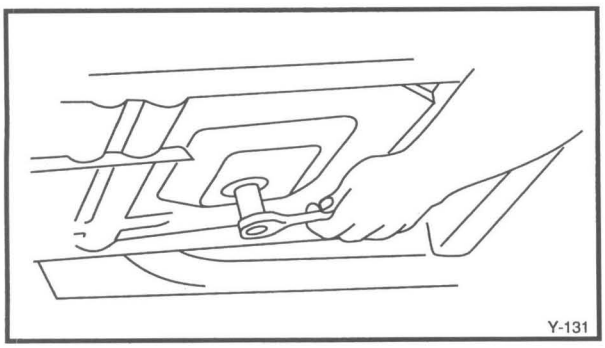
Y-131

⚠ WARNING
Use caution not to touch hot engine oil, or hot engine parts, during the following procedure.

3. Remove:
   - Drain plug
     Drain the engine oil

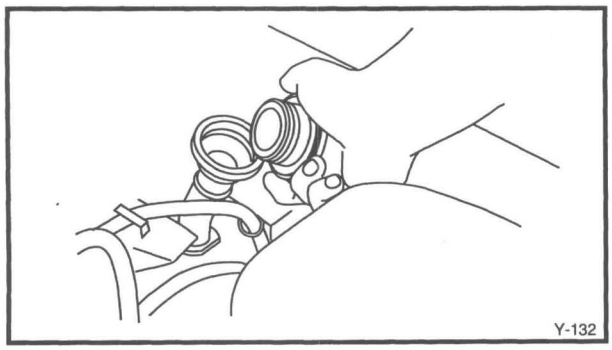
Y-132

4. Install:
   - Drain plug
   - New drain plug gasket

Drain Plug:
30 Nm (3.0 m • kg, 22 ft • lb)

5. Remove:
   - Filler cap
6. Fill
   - Crankcase

Recommended Oil:
YAMALUBE 4-cycle oil or SAE 10W30 [If temperature does not go below 2°C (35°F): SAE 20W40]
Oil Change Quantity:
0.9 L (1.0 US qt, 0.19 Imp gal)
Oil Capacity:
1.1 L (1.16 US qt, 0.24 Imp gal)

NOTE:
Recommended engine oil classification; API Service "SE", "SF", or "SG" type or equivalent.

CAUTION
Do not allow foreign material to enter the engine, and use care not to fill past the MAX dipstick mark.

7. Install:
   - Filler cap

NOTE:
It is acceptable to change the oil more frequently if desired.

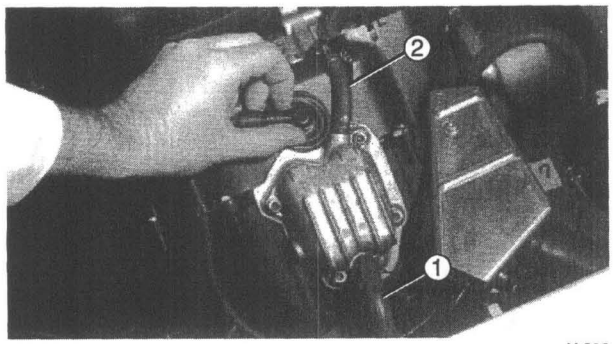

Y-200

OIL DELIVERY HOSE INSPECTION

1. Inspect:
   - Crankcase breather hose ①
   - Oil delivery hose ②
     Poor connection → Reconnect.
     Cracks/damage → Replace.

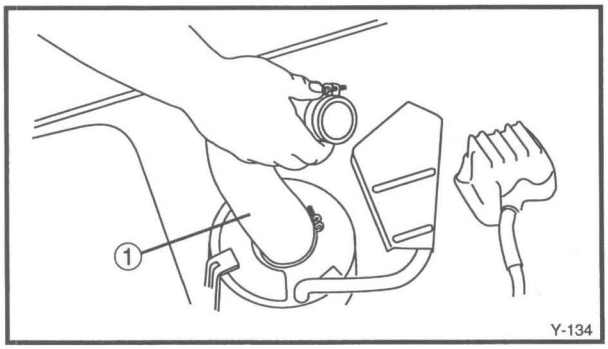

Y-134

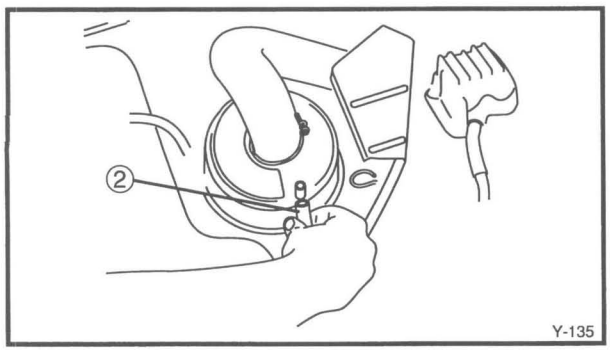

Y-135

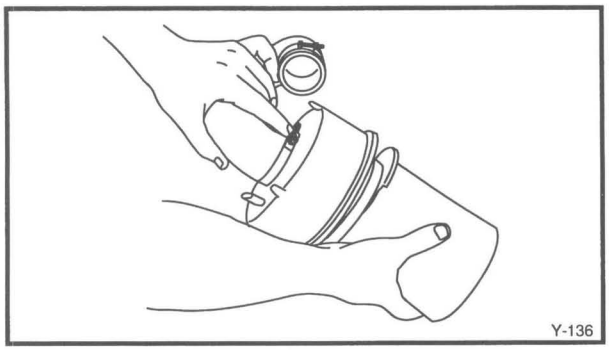
Y-136

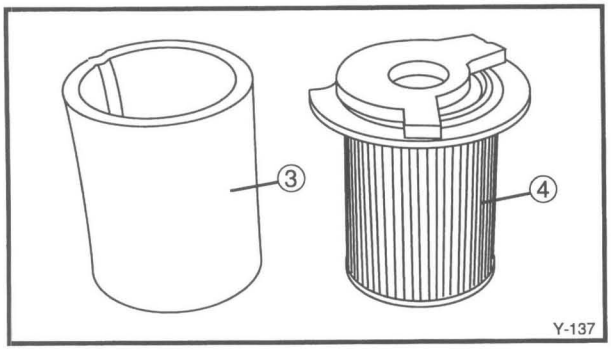

Y-137

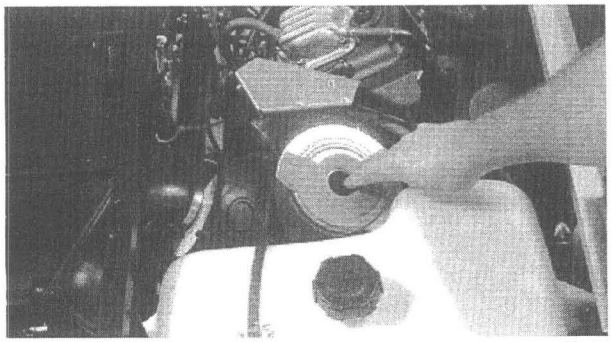
Y-210

AIR FILTER CLEANING

1. Disconnect:
   - Rubber joint ① from carburetor.
   - Crankcase breather hose ②.
2. Unhook:
   - Rubber straps
3. Remove:
   - Case cap
   - Filter elements
4. Remove:
   - Foam element ③
   - Paper element ④

   From the case cap.
5. Clean:
   - Foam element ③

     Wash it with soap and water and allow it to dry.
   - Paper element ④

     Tap it by hand to remove the dust.

CAUTION

- **Do not apply oil to the element cover; resistance to air flow will be increased and adversely affect the performance.**
- **Do not wash the paper filter or use pressurized air which will damage the element.**
- **Do not use filters made from any other material. Engine life will be reduced.**

6. Install:
   - All components

NOTE:

When assembling the air filter, reverse the removal procedure. Note the following caution.

CAUTION

- **Before replacing elements, lightly lubricate the O-ring in the top of filter element. Be careful not to dislodge the O-ring or engine damage may result.**
- **When placing the filter elements back into the case, align the two small projections on the inside of the filter cap with the straight edges of the paper element's steel end plate.**

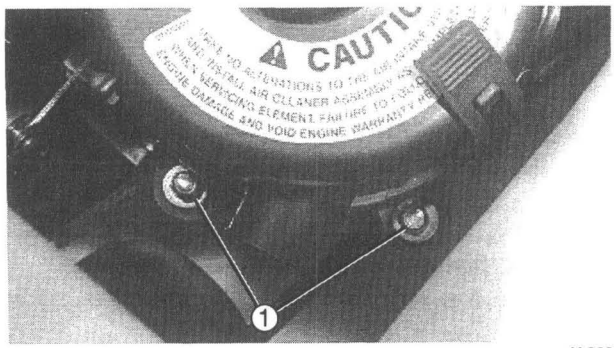

Y-328

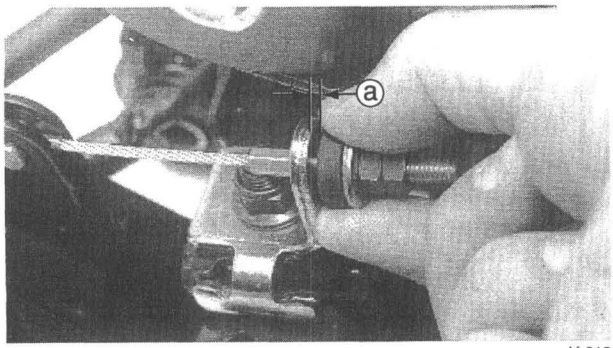

Y-212

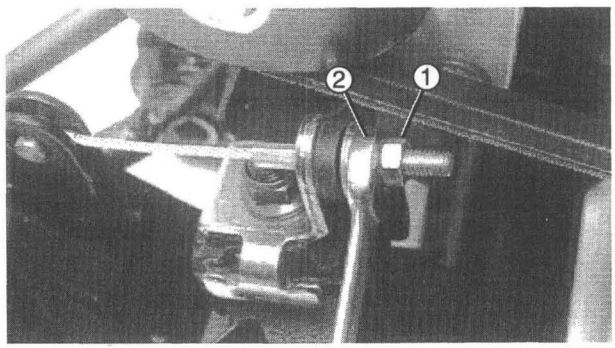

Y-213

ENGINE BRACKET ADJUSTMENT

1. Disconnect:
   - Rubber joint from carburetor.
   - Corrugated air intake hose.
   - Crankcase breather hose.
2. Remove:
   - Holding bolts ①
   - Air cleaner case.
3. Measure:
   - Free play ⓐ (Engine bracket tensioner)
     Out of specification → Adjust.

Engine Bracket Tensioner:
Free play ⓐ : 2 mm (0.08 in)

Free play adjustment steps:
- Loosen the locknut ①.
- Adjust free play by turning the adjustment nut ②.

To Reduce	→	**Turn locknut ② clockwise.**
To Increase	→	**Turn locknut ② counterclockwise.**

- Tighten the locknut.

COMPRESSION PRESSURE MEASURMENT

NOTE:
Insufficient compression pressure will result in performance loss.

1. Measure:
   - Valve clearance
     Out of specification → Adjust.
     Refer to "VALVE CLEARANCE ADJUSTMENT" section.

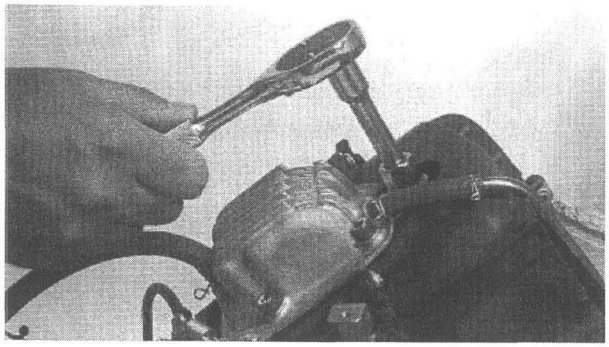

Y-214

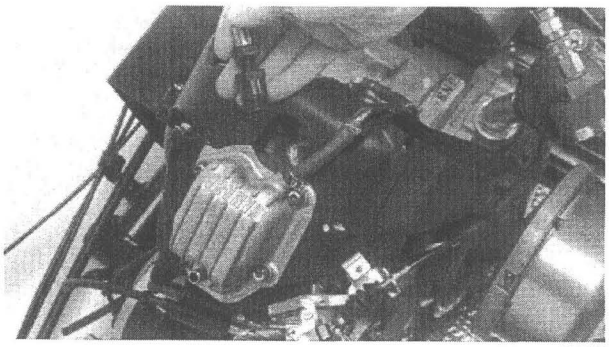

Y-215

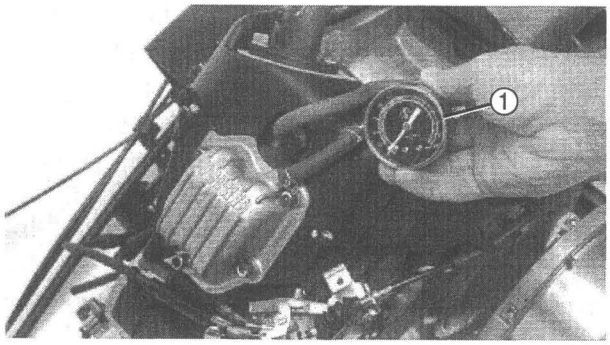

Y-216

2. Warm up the engine.
3. Remove:
   - Drive belt
   - Spark plug
4. Measure:
   - Compression pressure

Compression pressure measurement steps:

- Install the Compression Gauge ① using an adapter.

Compression Gauge:
YU-33223, 90890-03081

⚠ WARNING

Before cranking the engine, disconnect ignition coil lead (Red/White, Orange).

- Crank over the engine with the electric starter (be sure the battery is fully charged) with the throttle wide-open and choke "OFF" until the compression reading on the gauge stabilizes.
- Check readings against specified levels (See chart).

Compression Pressure (at sea level):
Standard:
1,250 kPa (12.5 kg/cm², 178 psi)
Minimum:
1,000 kPa (10.0 kg/cm², 142 psi)
Maximum:
1,400 kPa (14.0 kg/cm², 199 psi)

- If pressure falls below the minimum level:
  1. Squirt a few drops of motor oil into the cylinder.
  2. Measure the compression again.

Compression pressure (with oil introduced into cylinder)

Reading	Diagnosis
Higher than without oil	Worn or damaged piston or ring.
Same as without oil	Bad valves, cylinder head gasket or worn guide.
Above maximum level	Inspect cylinder head, valve surfaces, or piston crown for carbon deposits.

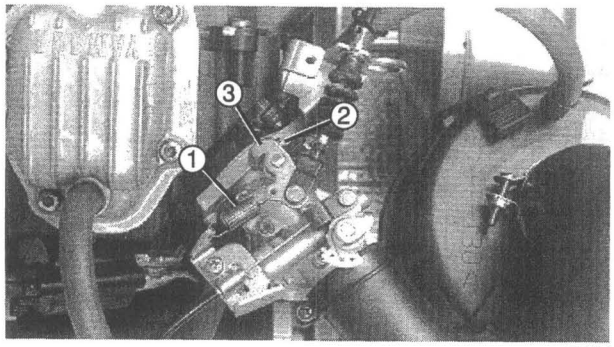

Y-217

CARBURETOR ADJUSTMENT

NOTE:
Remove anti-tamper cover by removing the two TORX® head screws that hold it in place.

1. Adjust:
   - Pilot screw ①

Pilot screw adjustment steps: • Lightly screw in the pilot screw ①. • Back it out from its seated position.
Standard Turned Out: **1 and 1/2 turns**
• Adjust mixture by turning the pilot screw 1/8 ~ 1/4 turn each time.
Too Lean → Turn pilot screw counterclockwise. **Too Rich → Turn pilot screw clockwise.**

2. Adjust:
   - Throttle stop screw ②

Throttle stop screw adjustment steps: • Screw out the throttle stop screw ② to clear the throttle arm ③. • Slowly screw in the throttle stop screw ② until it is lightly touching the throttle arm ③, then give it another 1/4 turn.
Standard Turned In: **1/4 turn**

CAUTION

Do not use any other setting or adverse performance will result.

3. Re-install anti-tamper cover.

ACCELERATOR STOP SWITCH

INSPECTION/ACCELERATOR PEDAL POSITION ADJUSTING BOLT HEIGHT ADJUSTMENT

1. Remove:
   - Service lid
2. Inspect:
   - Stop switch
     Dirt deposits → clean.
     Unsmooth movement → Replace switch.
3. Measure:
   - Adjusting bolt height ⓐ.
     Out of specification → Adjust.

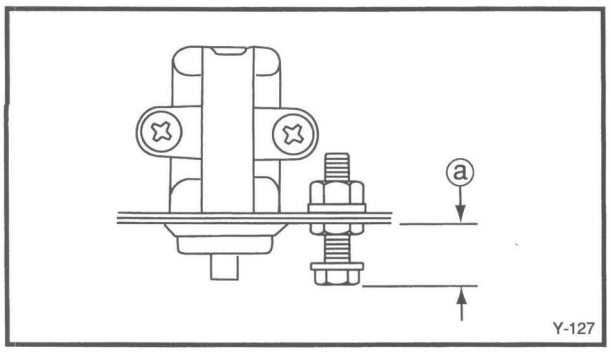

Accelerator Pedal Position Adjusting Bolt Height ⓐ:
18.00 ~ 18.40 mm (0.708 ~ 0.720 in)

THROTTLE CABLE ADJUSTMENT

NOTE:
Before performing throttle cable adjustment, perform above switch inspection and bolt adjustment.

Full Throttle Adjustment

1. Turn the main switch to "OFF".
2. Block the wheels.
3. Remove:
   - Rear access panel

NOTE:
There are two separate throttle cables: 1) from accelerator pedal to speed limiter, and 2) from speed limiter to carburetor. Each cable requires adjustment for free play and full throttle operation.

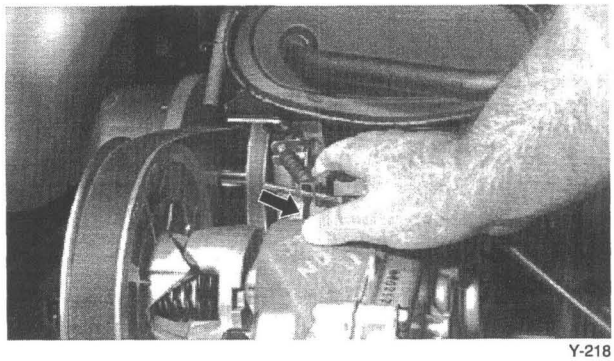
Y-218

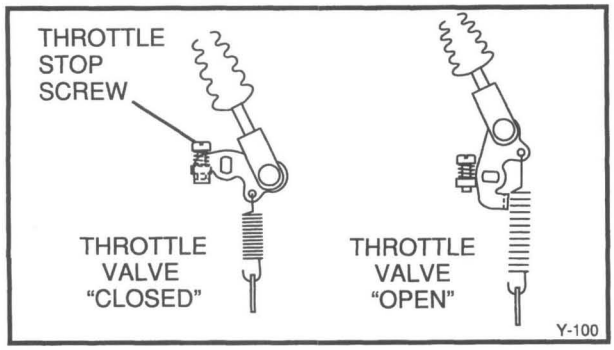

Y-100

4. Adjust:
   - Throttle cable 2 (Governor-Carburetor)

Throttle cable 2 adjustment steps:
- Swing the governor lever counterclockwise until it stops completely.
- While keeping the lever at this position, check that the throttle valve in the carburetor is fully open.
- If not, adjust the throttle cable 2 by turning the adjusting nuts in or out.

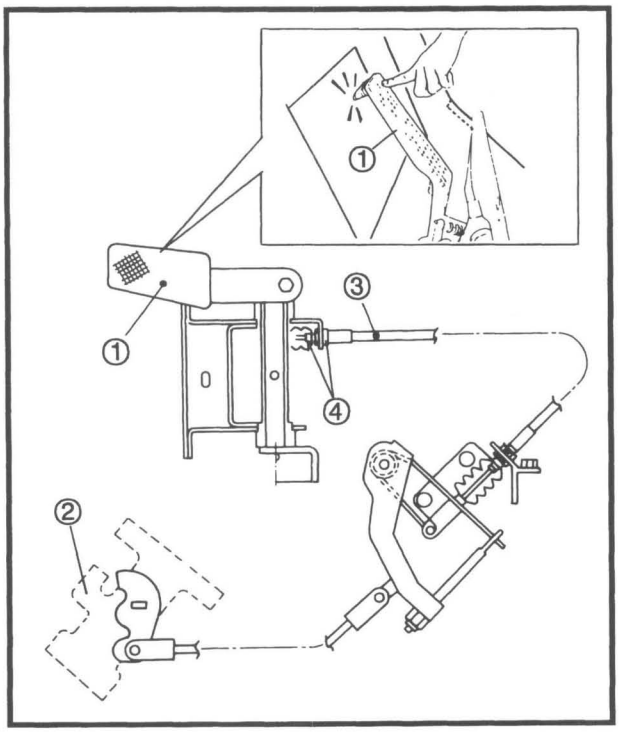

5. Adjust:
   - Throttle cable 1 (Accelerator pedal-Governor) ①

Throttle cable 1 adjustment steps:
- Depress the accelerator panel ① to limit.
- While keeping the pedal at this position, check that the throttle valve in the carburetor ② is fully open.
- If not, adjust the throttle cable 1 ③ by turning the adjusting nuts ④ in or out.

NOTE:
Throttle valve should reach fully open at the same time the accelerator pedal reaches its limit. If the throttle valve is fully open before the accelerator pedal reaches its limit, cable 1 is too tight.

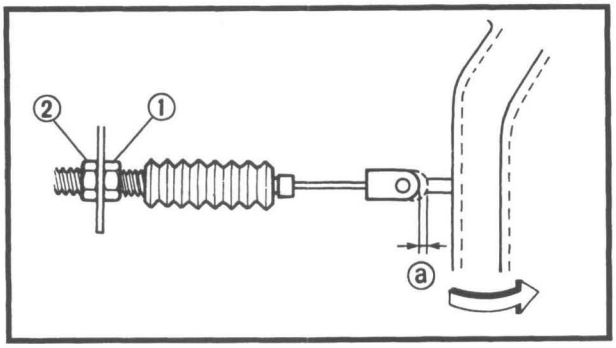

Free play adjustment

1. Measure:
   - Free play (Throttle cable 2) ⓐ
     Out of specification → Adjust.

Free Play (Throttle Cable 2):
0.5 mm (0.02 in)

2. Adjust:
   - Free play (Throttle cable 2)

Throttle cable 2 free play adjustment steps:	
• Loosen the locknut ①.	
• Turn the adjuster ② in or out until the correct free play is obtained.	
Turn in	**Free play is decreased.**
Turn out	**Free play is increased.**
• Tighten the locknut.	

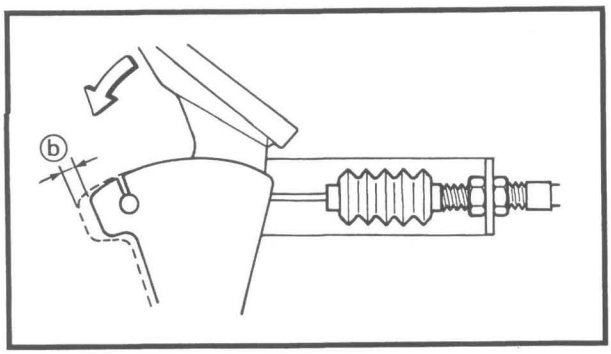

3. Measure:
   - Free play (Throttle cable 1) ⓑ
     Out of specification → Adjust.

Free Play (Throttle Cable 1):
0.2 ~ 0.5 mm (0.008 ~ 0.020 in)

4. Adjust:
   - Free play (Throttle cable 1) ⓑ

Throttle cable 1 free play adjustment steps:	
• Loosen the locknut ①.	
• Turn the adjuster ② in or out until the correct free play is obtained.	
Turn in	**Free play is decreased.**
Turn out	**Free play is increased.**
• Tighten the locknut.	

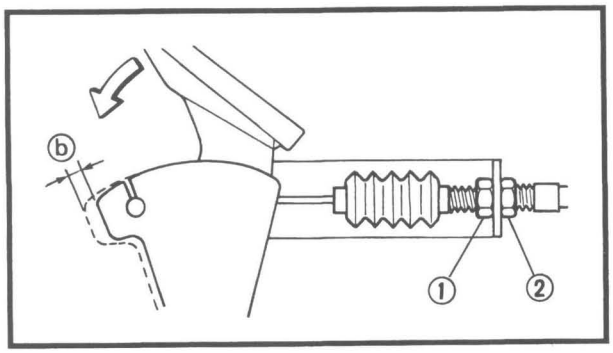

SPEED LIMITER ADJUSTMENT

Adjustment

The speed limiter is properly adjusted at the factory, so no adjustment is normally required.

Standard Limiter Setting:
APPROX. 3,050 r/min at
19 km/h (12 mph)

NOTE:

- The golf car maximum speed should be checked, and the speed limiter setting adjusted as necessary, when service is performed on the throttle cables or governor parts.

- Before performing repairs, mark the present limiter setting with a paint mark for future reference. Return the adjustment to the original setting after repairs are complete, then test vehicle speed.
- The speed limiter can be adjusted so that the maximum speed is 10 mph ~ 14 mph (16 ~ 22 km/h).

⚠ WARNING

Do not exceed the maximum speed setting of 14 mph (22 km/h) under any circumstances.

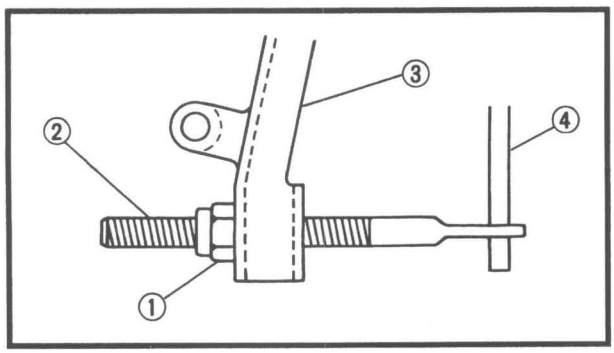

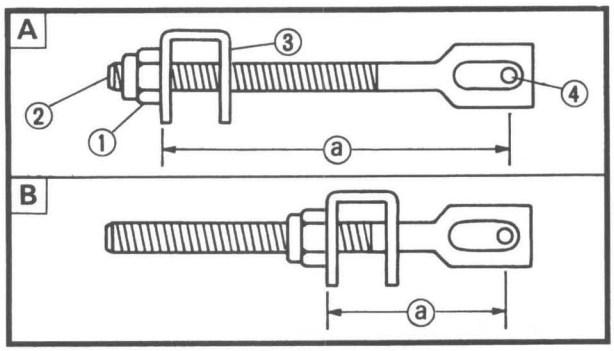

1. Check:
   - Setting speed
     Compare the maximum speed with another golf car driving parallel. (The golf car used for comparison should be representative of other cars in the same fleet).
     Improper setting → Readjust.

   ① Locknut
   ② Adjusting bolt
   ③ Limiter lever
   ④ Torsion spring

Limiter setting adjustment steps:
- Before getting started, mark the present setting position with a paint mark.
- Adjust the distance ⓐ by turning locknut ①.

To Reduce Max. Speed → Turn locknut ① counterclockwise Ⓐ.
To Increase Max. Speed → Turn locknut ① clockwise Ⓑ.

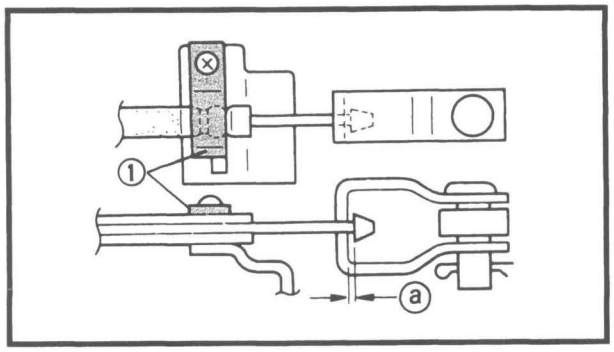

CHOKE CABLE ADJUSTMENT

1. Measure:
   - Free play (Choke cable) ⓐ
     Out of specification → Adjust.

	Free Play (Choke Cable) ⓐ **1.0 mm (0.04 in)**

① Cable clamp

2. Adjust:
   - Free play (Choke cable)

Choke cable free play adjustment steps:
- Make sure the choke knob and carburetor choke lever are in the "at rest" or off position.
- Loosen the cable clamp ①.
- Slide cable forwards or backwards in cable clamp until free play specification is met.
- Tighten the cable clamp screw.

NOTE:
After adjusting the choke cable, make sure that the choke moves smoothly, and that the choke opens fully when the choke knob is pulled all the way out.

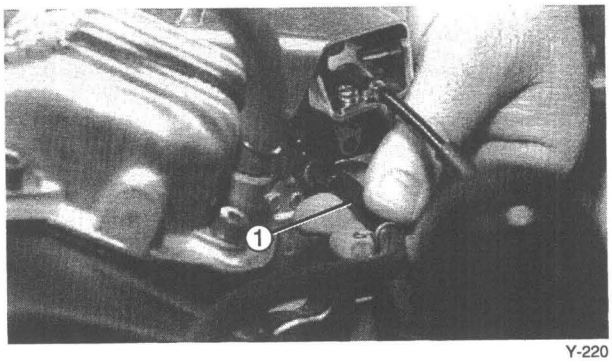

Y-220

FUEL PUMP INSPECTION

Fuel Supply to Pump

1. Remove:
   - Drive belt

⚠ WARNING

Gasoline is highly flammable. Aim the fuel hose into a receptacle. Keep away from any spark, flame, or other source of ignition. Wipe up any spilled fuel immediately.

2. Disconnect:
   - Ignition coil lead (Red/White, Orange)
   - Fuel feed hose ①
     from carburetor.
3. Place a pan or other receptacle under the hose end.
4. Crank over the engine with starter motor.
5. Check to see if fuel flows out from the feed hose end.
   If fuel does not flow out, check pulse hose, fuel filter, and hose from tank to pump.
   Cracked/plugged → Replace.
   If pump appears leaky, replace it.

Fuel Pump Test

NOTE:
This inspection requires "wet condition," or the presence of some fuel in the pump. A totally dry pump will not function due to air leaks through valve gaps in the pump.

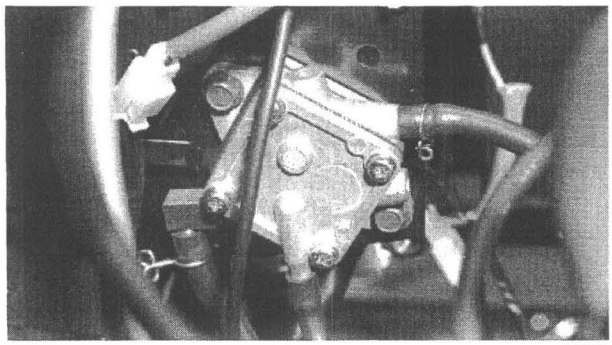
Y-388

1. Mark fuel pump hoses to allow for re-connection in their proper location after test.
2. Disconnect:
   - Hoses
   from fuel pump.

CAUTION
During the following steps, do not apply more pressure than the specification given.

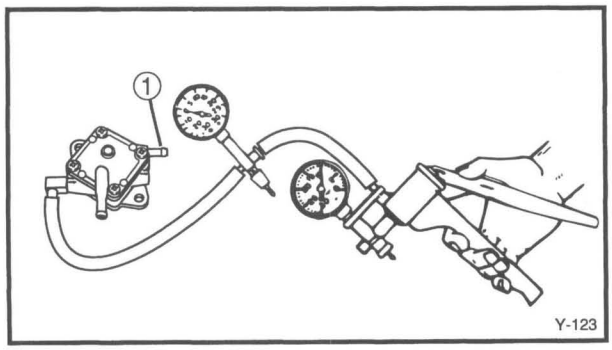

Y-123

3. Connect pressure hose from Mityvac® to pump inlet spigot from fuel tank delivery hose (Diaphragm Test).
4. Block fuel outlet spigot ① and pressurize to 7.0 ± 1.0 psi.
5. Check:
   Pressure being maintained.
   Pressure loss → Replace pump.

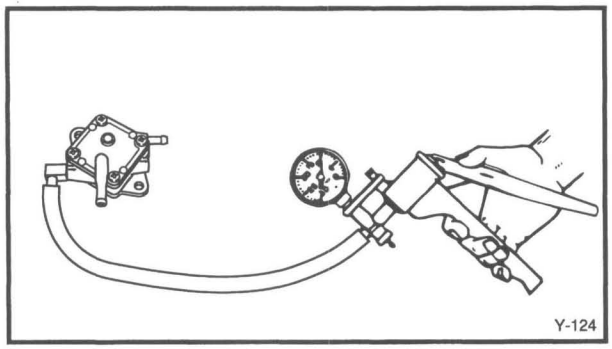
Y-124

6. Connect pressure hose from Mityvac® to vacuum side of pump tool (Inlet Valve Test).
7. Apply negative pressure to 300 mb ± 10%.
8. Check:
   Pressure is not released all at once.
   Sudden pressure release → Replace pump.

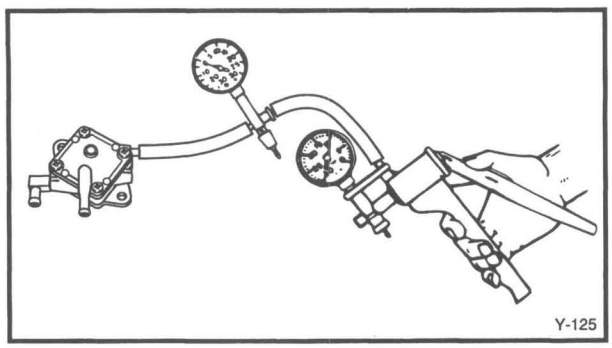
Y-125

9. Connect pressure hose from Mityvac® to pump outlet spigot from fuel pump to carburetor (Outlet Valve Test).
10. Pressurize to 7.0 ± 1.0 psi.
11. Check:
    Pressure being maintained.
    Pressure loss → Replace pump.

CAUTION

Never attempt to disassemble the fuel pump.

12. Connect:
    - Hoses
      to fuel pump.

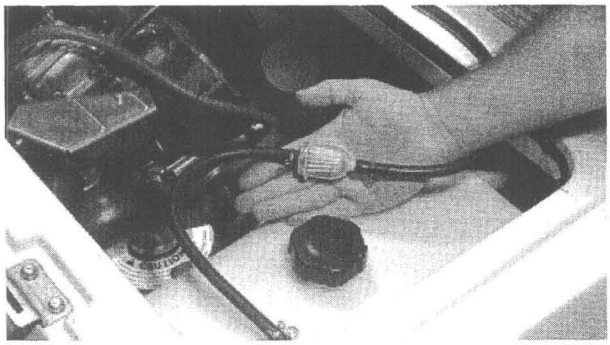

Y-222

FUEL FILTER INSPECTION

1. Disconnect:
   - Fuel hose
     from fuel pump.
   - Fuel hose
     from gas tank.
2. Remove:
   - Fuel filter ①
3. Inspect:
   - Fuel filter
     Contamination → Replace.

FUEL HOSE INSPECTION

1. Inspect:
   - Fuel hoses
     Damage/Cracks → Replace.
     Poor connection → Reconnect.

POWER TRAIN

TRANSMISSION OIL LEVEL MEASUREMENT

1. Place golf car on a level surface.
2. Remove the rear access panel.
3. Check:
   - Oil level
     Oil level low → Add sufficient oil.

G14A

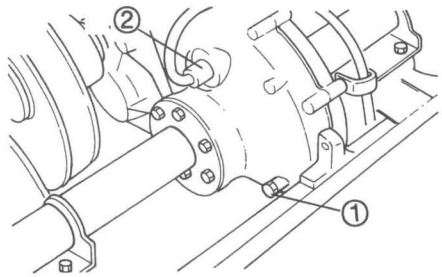

Y-148

G14E

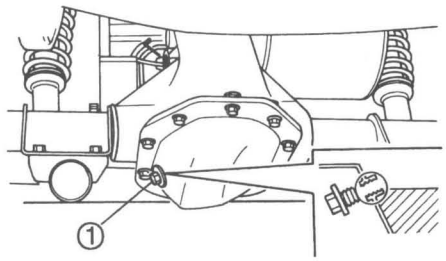

Y-149

G14A

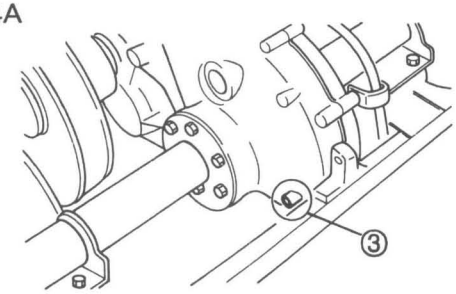

Y-150

G14E

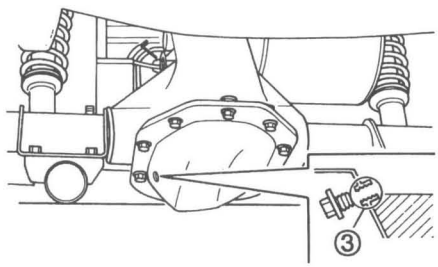

Y-151

Transmission oil level inspection steps:

- Remove the oil level plug ① and vent cap ② (G14-A).

NOTE:
Place an oil pan under the transmission case.

- Add sufficient oil little by little into the vent hole (G14-A) or level plug hole (G14-E) until oil flows out from the level plug hole ③.

Recommend Oil:
SAE 90 gear oil
Oil Capacity:
G14-A:
800 cc (0.70 Imp qt, 0.85 US qt)
G14-E:
300 cc (0.26 Imp qt, 0.32 US qt)

CAUTION
Do not allow foreign material to enter the transmission case.

- Allow excess oil to flow out until it stops.
- Install the oil level plug and vent cap (G14-A).

Oil Level Plug:
For G14-A:
14 Nm (1.4 m • kg, 10 ft • lb)
For G14-E:
44 Nm (4.4 m • kg, 32 ft • lb)

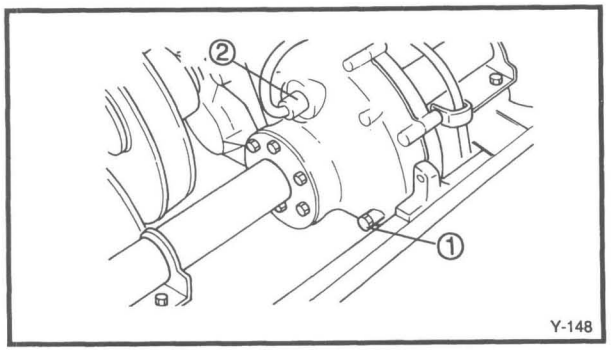

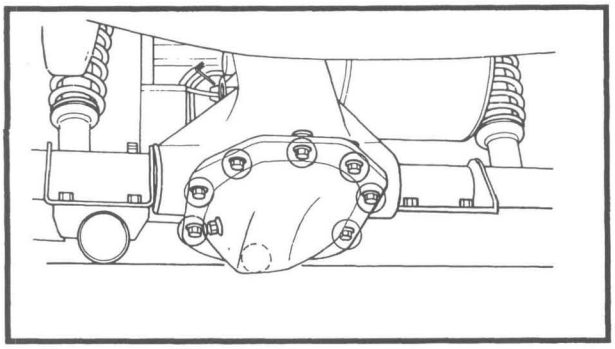

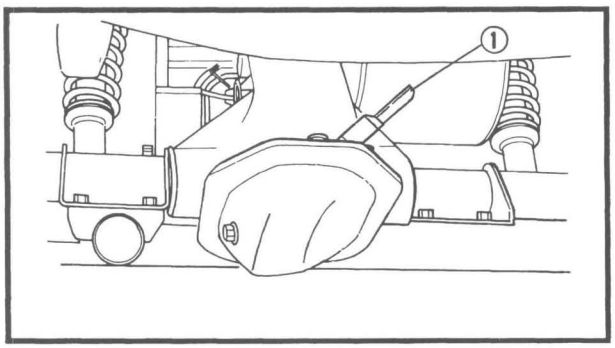

TRANSMISSION OIL REPLACEMENT

1. Place golf car on a level surface.
2. Place an oil pan under the transmission case.

G14-A

3. Remove:
   - Vent cap
   - Drain plug

   Drain the transmission oil.

G14-E

3. Remove:
   - Transmission case bolts
   - Transmission case cover

   Drain the transmission oil.

NOTE:

Separate the transmission case cover from the case assembly using a gasket scraper ①.

CAUTION

Use care not to damage the case sealing surface or deform the transmission case cover.

4.Install:
   - Drain plug (G14-A)
   - Vent cap (G14-A)

	**Drain Plug (G14-A):** **14 Nm (1.4 m • kg, 10 ft • lb)**

   - Transmission case cover (G14-E)

     Refer to "POWER TRAIN FOR G14-E TRANSMISSION, ASSEMBLY" in Chapter 4.

5. Fill:
   - Transmission case
     Refer to "TRANSMISSION OIL LEVEL MEASUREMENT" section. (Page 2-21)

Recommended Oil:
SAE 90 gear oil

Oil Capacity:
G14-A:
800 cc (0.70 Imp qt, 0.85 US qt)
G14-E:
300 cc (0.26 Imp qt, 0.32 US qt)

CAUTION

Do not allow foreign material to enter the transmission case.

DRIVE BELT INSPECTION (FOR G14-A)

1. Remove the seat.
2. Remove the drive belt.

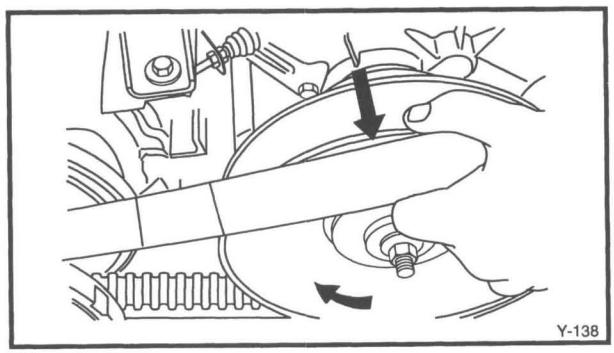

Drive belt removal steps:
- Set the shift lever halfway between "F" and "R".
- Pull out the primary sliding sheave.
- Pull the belt outward over the edge of the secondary fixed sheave.
- Rotate the secondary sheave clockwise and the belt will roll off of the secondary sheave.
- Slip the belt over the primary sheave to completely remove.

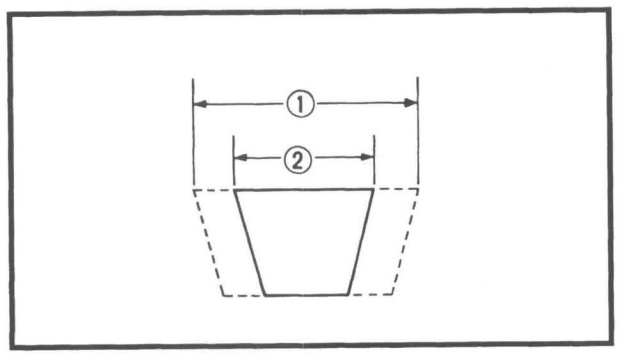

3. Inspect:
   - Drive belt
     Scratches/Slippage/Damage → Replace.
4. Measure:
   - Belt width
     Out of specification → Replace.

Wear Limit ②:
27.0 mm (1.06 in)

① New belt width: 31.0 mm (1.22 in)

5. Install the drive belt.

Drive belt installation steps:
- Set the shift lever halfway between "F" and "R".
- Slip the belt over the primary sheave.
- Push the belt firmly into the secondary sheave at about the 10:00 o'clock position.
- Rotate the secondary sheave clockwise until the belt has rolled into position on the secondary sheave.

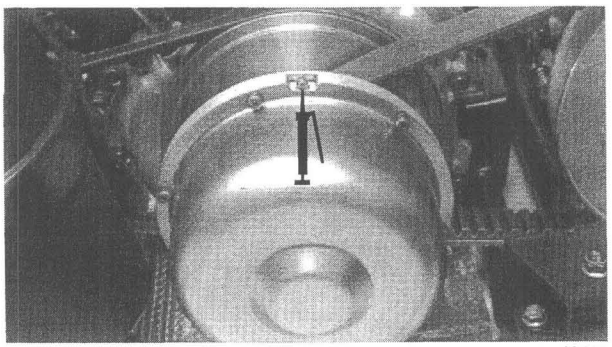

Y-223

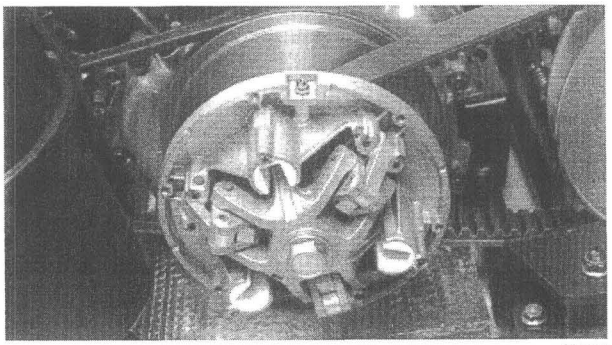

Y-224

PRIMARY SHEAVE LUBRICATION (FOR G14-A)

1. Lubricate:
   - Primary sheave

Recommended Grease:
Molybdenum disulfide grease

Grease Amount:
Three shots (Manual grease gun)
Three seconds (Automatic grease gun)

2. Inspect:
   - Remove sheave cap and inspect link weights and pivot pins.
     Worn → Replace.

CAUTION

Clean any excess grease from link weights before reinstalling sheave cap. Link weight pivots must be clean and dry. Oil or grease will attract dirt and cause premature wear. Be sure that no grease gets on drive belt.

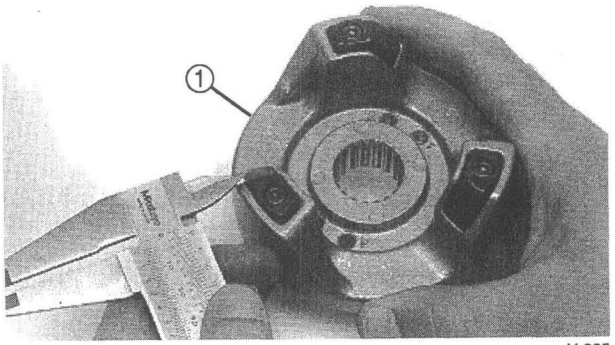

Y-225

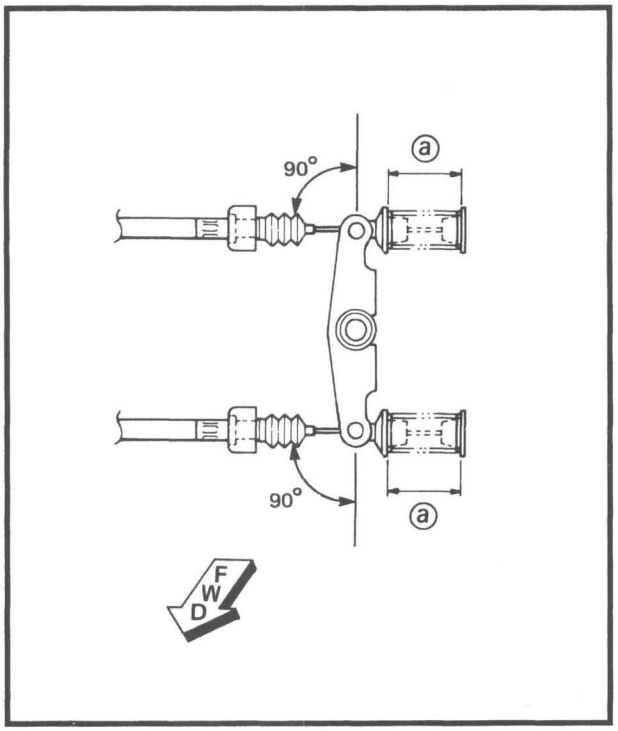

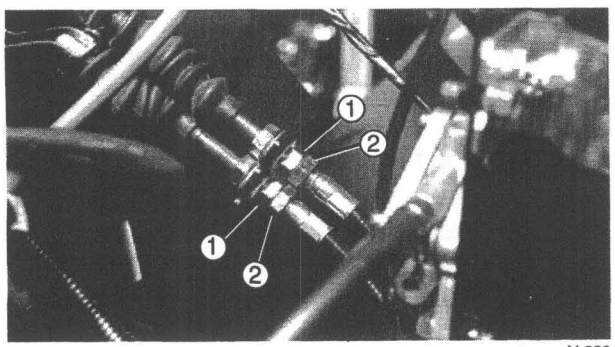

Y-226

SHEAVE INSPECTION

1. Inspect:
   - Sliding sheave movement (Primary and secondary)
     Check for condition by moving with hand.
     Obstruction → Disassemble sheave, and inspect component parts.
     Refer to CHAPTER 4 "PRIMARY SHEAVE" and "SECONDARY SHEAVE" section.
2. Measure:
   - Ramp shoe thickness (Secondary spring seat)
     Out of specification → Replace.

Wear Limit ⓐ:
1.0 mm (0.04 in)

① Spring seat cam

SHIFTING CABLE ADJUSTMENT (FOR G14-A)

1. Measure:
   - Shift stroke
     Out of specification → Adjust.

Shift Stroke ⓐ:
15 ~ 17 mm (0.59 ~ 0.67 in)

Shift stroke adjustment:
- Set the shift lever halfway between "F" and "R" and pin lever in place with a bolt or pin with 8 mm diameter.
- Loosen the locknuts ②.
- Adjust the shift stroke by turning the adjusting nuts ①.

To Reduce	→	**Turn adjusting nut ① clockwise.**
To Increase	→	**Turn adjusting nut ① counterclockwise.**

- Tighten the locknuts ②.
- Un-pin the shift lever.

NOTE:
Check shifting operation after adjusting shift stroke.

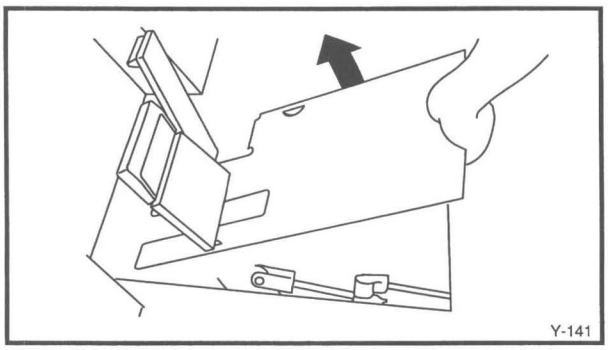
Y-141

CHASSIS

BRAKE CABLE INSPECTION

1. Remove:
   - Service lid.
   - Be careful not to scratch body

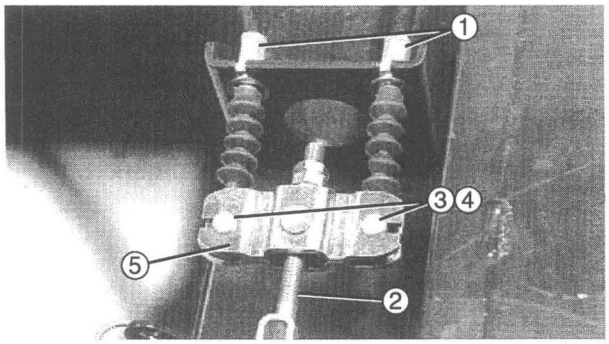

Y-227

2. Inspect:
   - Brake cables ①
   - Brake rod ②
   - Clevis pins ③
   - Cotter pins ④
   - Brake equalizer ⑤.
     Wear/Damage → Replace.

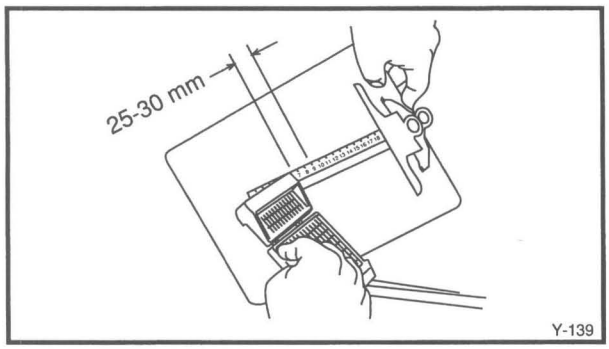

Y-139

3. Measure:
   - Brake pedal free play.
     Press against the pedal (using light force) and measure the distance the pedal travels before resistance is felt.
     Out of specification → Adjust.

	Brake Pedal Free Play: **25 ~ 30 mm (0.98 ~ 1.18 in)**

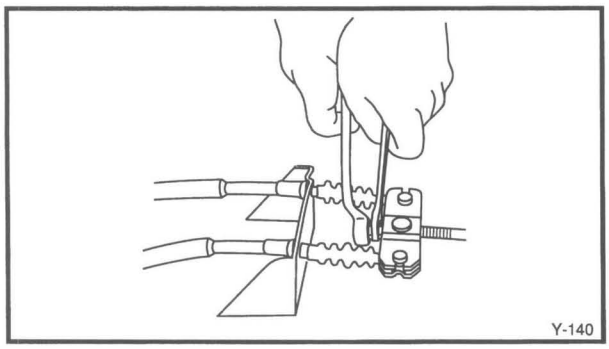
Y-140

Free play adjustment steps:
- Loosen the locknut.
- Adjust the free play by turning the adjusting nut in or out until specification is met.

NOTE: The adjusting nut has a cam shape, allowing the nut to be turned only in increments of 180°.

To Reduce Freeplay	→	**Turn adjusting nut clockwise.**
To Increase Freeplay	→	**Turn adjusting nut counterclockwise.**

- Tighten the locknut.

⚠ WARNING

Overly tight cables will prevent proper brake self-adjuster action, reducing braking performance.

PARKING BRAKE ADJUSTMENT

NOTE:
Before performing parking brake adjustment, adjust brake pedal free play.

1. Turn the main switch to "OFF", and remove the key.
2. Remove the service lid.
3. Inspect:
   - Parking brake ratchet ①
   - Ratchet stopper ②
     Wear/Damage → Replace.
4. Apply the brake, hook the stopper ② at the second notch on the ratchet ①.
5. Measure:
   - Free play (Release timing) ⓐ
     Out of specification → Adjust.

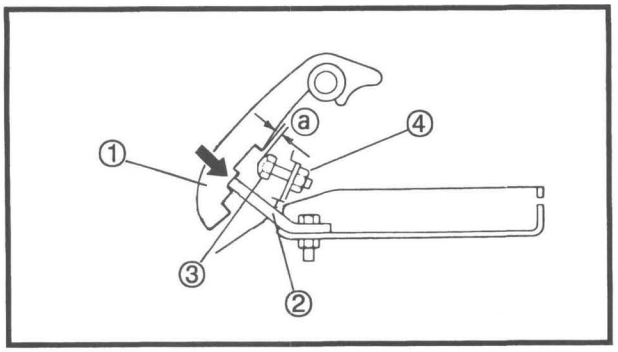

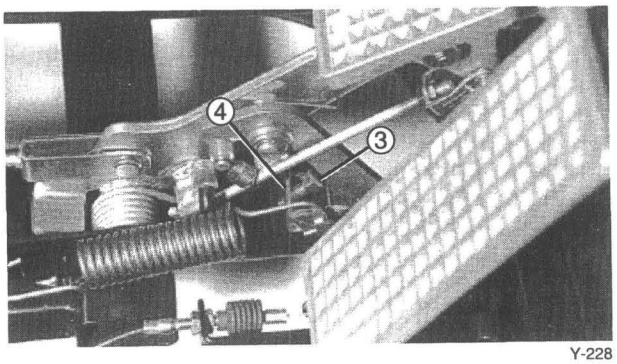

Y-228

Free Play (Release Timing):
0 - 0.3 mm

Release timing adjustment steps:
- Loosen the locknut ④.
- Adjust the release timing by turning the adjusting bolt ③.

To Advance	→	**Turn adjusting bolt ② counterclockwise.**
To Retard	→	**Turn adjusting bolt ② clockwise.**

- Tighten the locknut.
- Recheck the release timing.

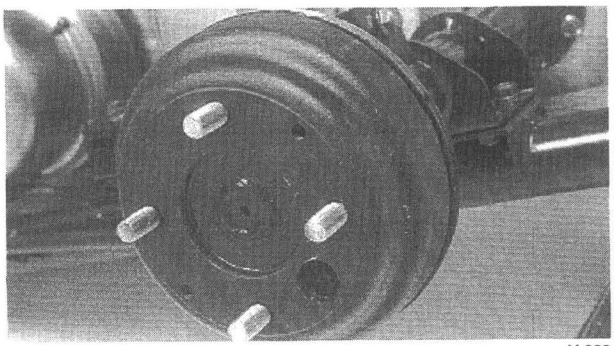
Y-229

BRAKE SHOE LINING INSPECTION

1. Turn the main switch to "OFF", and remove the key.
2. Apply parking brake, loosen the wheel nuts.
3. Block the front wheels. Jack up the rear of the car.
4. Release parking brake by depressing the accelerator pedal.
5. Remove the wheel nuts and rear wheel.

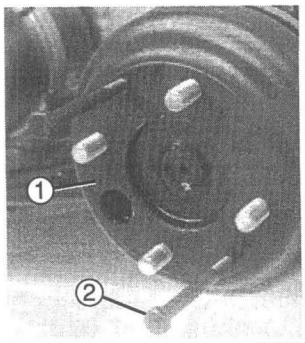

Y-230

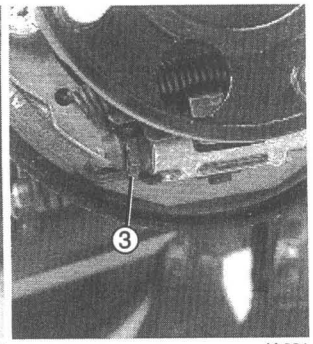

Y-231

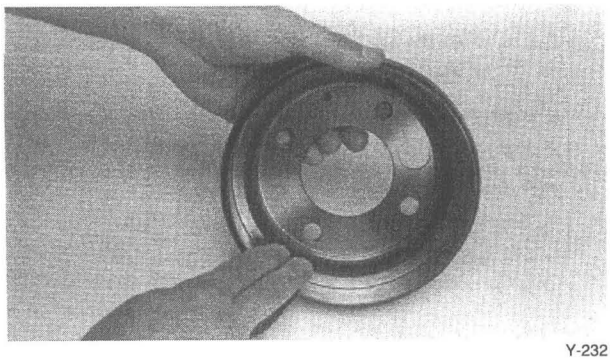
Y-232

6. Remove:
   - Brake drum ①
     To loosen the drum, screw bolts ② onto the drum as shown.

NOTE:
If it is very hard to remove the drum, screw in the adjusting nut ③ in the shoe plate. (Brake drum shown removed for clarity).

7. Inspect:
   - Drum inner surface
     Oil → Clean completely with non-oily solvent.
     Scratches → Lightly polish evenly with emery cloth.

8. Measure:
   - Drum inside diameter
     Out of specification → Replace drum.

Maximum Inside Diameter:
161 mm (6.34 in)

CAUTION

Right and left side brake shoe sets (passenger side and driver side) are not interchangeable. If more than one set is to be removed at a time, mark sets so they can be installed in their original positions.

9. Inspect:
   - Shoe lining surface
     Oil → Replace/Clean completely with non-oily solvent, and emery cloth.
     Scratches → Lightly polish with emery cloth.

10. Measure:
    - Shoe lining thickness
      Out of specification → Replace.
      Refer to CHAPTER 3 "BRAKE" section.

Minimum Lining Thickness:
0.75 mm (0.029 in)

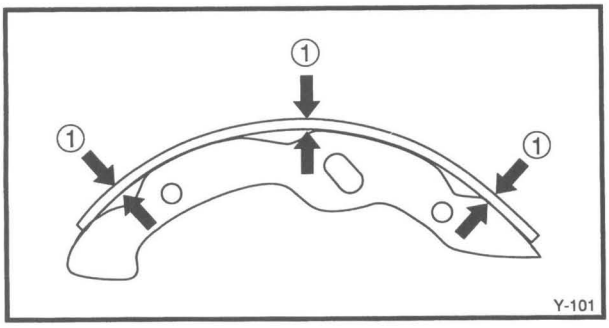

Y-101

① Measuring points

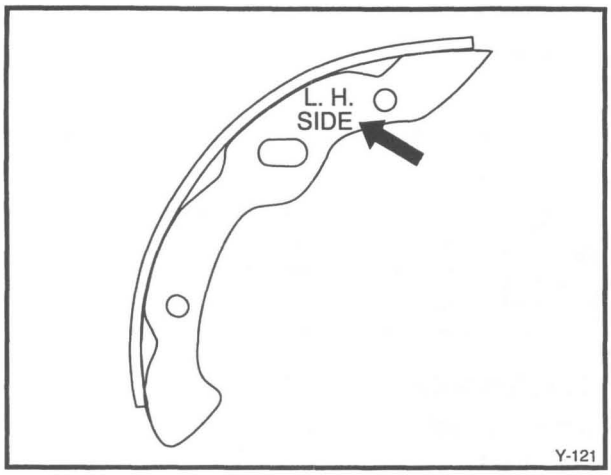

CAUTION

Replace the brake shoes as a set if either is found to be worn to the wear limit. Replacement right side and left side brake shoe sets have different part numbers, and are stamped "R.H. SIDE" (passenger side) and "L.H. SIDE" (driver side), respectively. Use care to install replacement shoes in their proper locations - shoe sets are not interchangeable.

11. Install:
    - Brake drum
    - Rear wheel

⚠ WARNING

Make sure that no grease or water comes in contact with the brake drum and/or shoe surfaces.

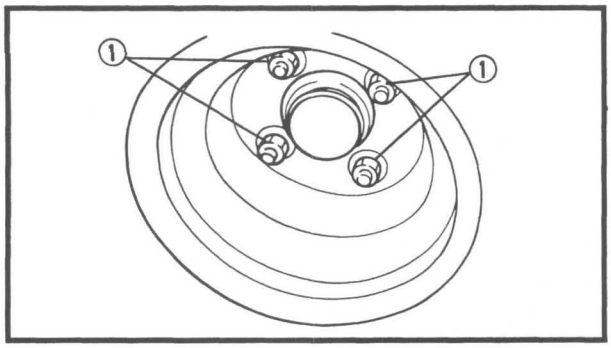

12. Install:
    - Wheel nuts

NOTE:

First finger-tighten a top nut, then the rest diagonally. Let the vehicle down till the weight is on the wheels. Finish tightening the nuts.

	Wheel Nut ①: **90 Nm (9.0 m • kg, 65 ft • lb)**

13. After assembling, depress the brake pedal about 10 times to adjust the shoe-drum clearance.

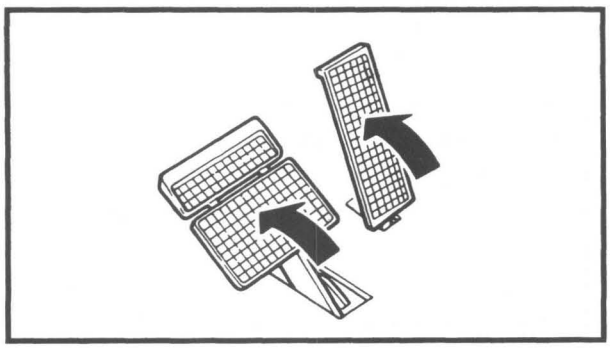

BRAKE AND ACCELERATOR PEDALS

1. Check:
    - Pedal movement
      Disconnect the brake rod and throttle cable.
      Roughness → Lubricate pivoting parts.

	Recommended Lubricant: **SAE 10W30 Motor Oil**

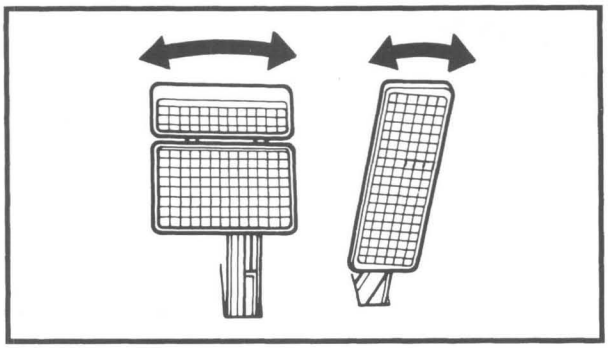

2. Check:
   - Pedal side free play
     Try to move the pedals from side to side.
     Noticeable free play → Replace pivoting parts.

Pedal Side Play Limit:
5 mm (0.20 in) (Measured at top of pedal)

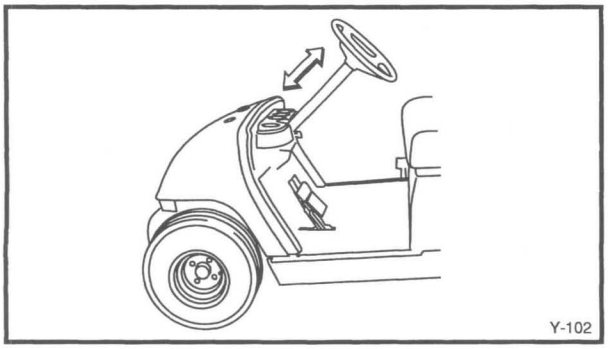

STEERING INSPECTION

Steering Shaft Axial Play Adjustment

1. Check:
   - Axial play
     Pull and push the steering wheel.
     Looseness → Retighten steering wheel and/or steering gearbox.

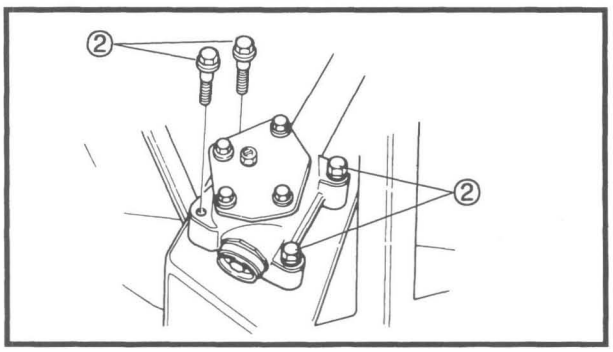

2. Tighten:
   - Nut (Steering wheel)
   - Bolts (Gear box) ②

Nut (Steering Wheel):
39 Nm (3.9 m • 8 kg, 28 ft • lb)
Bolt (Gear Box Securing) ② :
32 Nm (3.2 m • kg, 23 ft • lb)

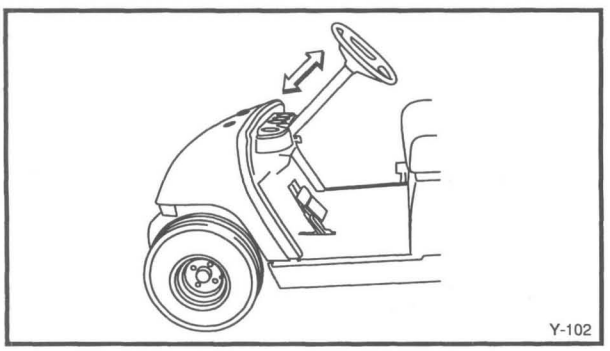

3. Recheck:
   - Axial play
     Still excess play → Adjust the steering wheel axial free play.

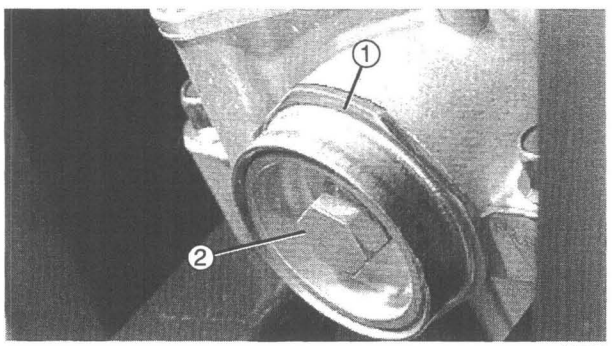

Axial free play adjustment steps:
- Loosen the locknut ①.
- Tighten the steering shaft adjustment bolt ② until the shaft does not move.
- Loosen the adjustment bolt ② completely. Be sure the bearing race does not fall out of its seat.
- Retighten the adjustment bolt ② until the steering shaft has no axial looseness, but rotates smoothly to the left and right limits of the wheel rotation.
- Tighten the locknut ①.

Locknut ①:
25 Nm (2.5 m • kg, 18 ft • lb)

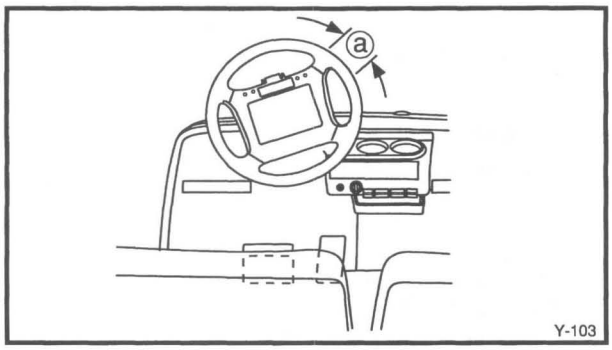

Steering Wheel Free Play Adjustment

1. Check:
   - Steering wheel free play
     Turn the steering wheel lightly.
     Out of specification → Adjust.

	Steering Wheel Free Play ⓐ: **Limit: 30 mm (1.2 in)**

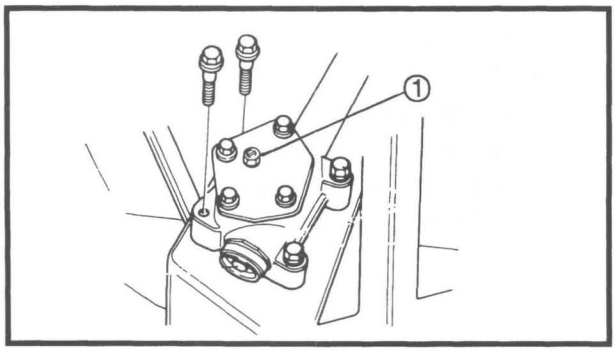

Steering wheel free play adjustment steps:
- Set vehicle with front wheels pointed straight ahead.
- Loosen the locknut ①.
- Tighten the free play adjusting screw until it stops (to fully seat the pitman arm).
- Loosen the free play screw 1/2 turn (180°).
- Tighten locknut ①.

	Locknut ①: **15 Nm (1.5 m • kg, 11 ft • lb)**

2. Recheck:
   - Steering wheel free play
     Still free play → Disassemble the steering gearbox and check the components.
     Refer to CHAPTER 3 "STEERING SYSTEM" section.

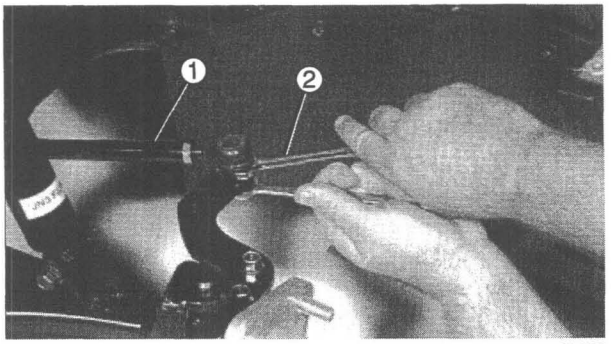

Y-235

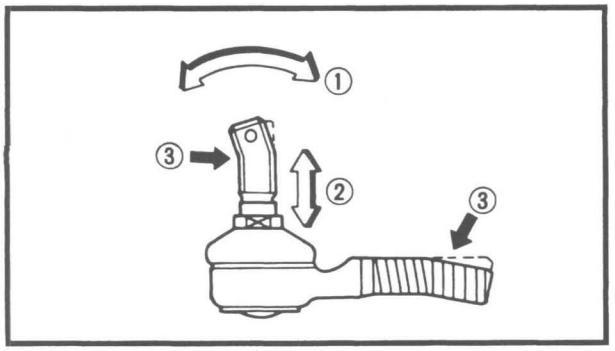

STEERING LINKAGE INSPECTION

Tie-Rod End (Universal joint)

1. Remove:
   - Cotter pin
   - Locknut
   - Tie rod ①

NOTE:
When removing the locknut, hold the rod end using a 14 mm wrench ②.

2. Check:
   - Rod end
     Unsmooth movement ① → Replace.
     Noticeable free play ② → Replace.
     Bent bolt ③ → Replace.
     Refer to CHAPTER 3 "STEERING SYSTEM" section.

3. Install:
   - Tie rod ①

Tie-Rod-Idler Arm, Knuckle Arm-Tie Rod:
35 Nm (3.5 m • kg, 25 ft • lb)

Knuckle

1. Check:
   - Kingpin free play
   a. Park the vehicle on a level surface and apply parking brake.
   b. Raise the front wheels with a suitable lift.
   c. Gently rock the font wheel side to side.
   Noticeable free play → Replace kingpin and bushings.

Free Play Limit ①:
5 mm (0.20 in)

Refer to CHAPTER 3 "FRONT SUSPENSION" section.

WHEEL ALIGNMENT

Toe-In

1. Place the vehicle on a level surface.
2. Push the empty car forward 20 ft. to stabilize suspension. Coast to a stop with front wheels pointed straight ahead.

NOTE:
Do not push the car backward or apply the brakes to stop. Either one will change toe-in.

3. Measure:
   - Toe-in
     Out of specification → Adjust.

Toe-In:
Unloaded:
1 ~ 11 mm (0.04 ~ 0.43 in)
Fully loaded: Zero mm (Zero in)

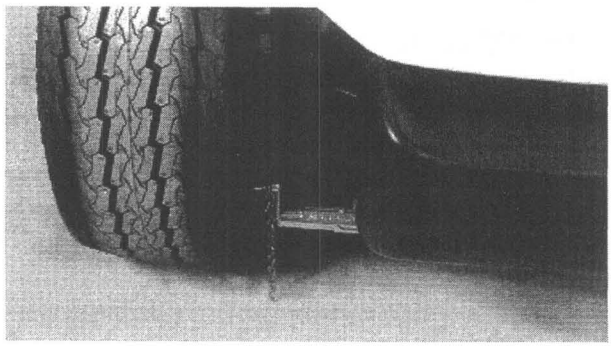

Y-236

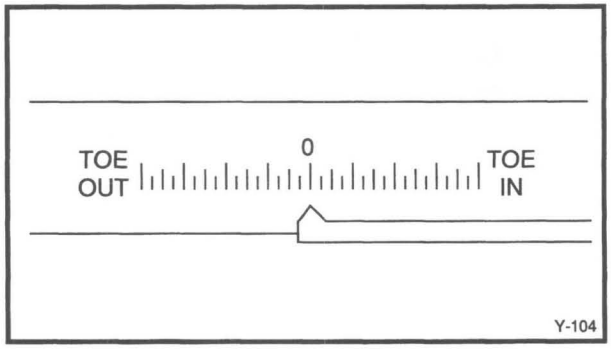

Y-104

Toe-in measurement steps:

- Place the Toe Measuring Gauge between the inner sidewalls of the front tires approximately 2-1/4 in (60 mm) behind the face of the front tire. The height indicator chains should just touch the floor evenly on each side.

Toe Measuring Gauge:
YC-39526

- Zero the scale on the gauge by sliding the moveable scale so the pointer is at 0.
- With gauge in place, roll the car forward 1/2 turn of the wheels. The height indicator chains should again just touch the floor.

NOTE:
Move the car by pushing from the rear, or pulling directly on the front bumper. Make sure the front of the car is not lifted or pushed down, which would cause an inaccurate measurement.

- Read the toe-in measurement on the gauge scale.

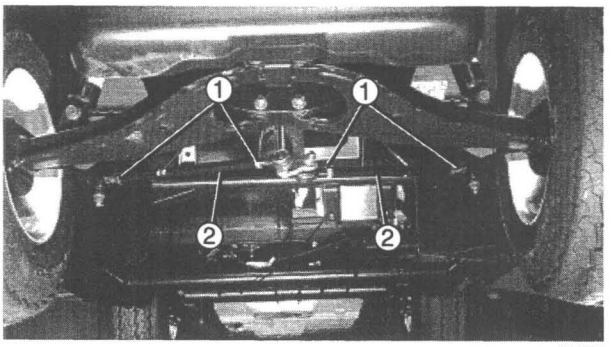

Y-237

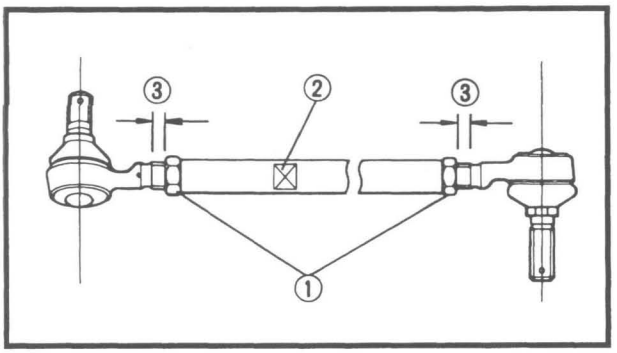

Toe-in adjustment steps:

- Jack-up the front of the vehicle. Apply parking brake.
- Loosen the locknuts ①.
- Adjust the toe-in by turning the tie rods ②.

To Reduce →	**Turn the tie rods ② to make their lengths longer (more toe-in).**
To Increase →	**Turn the tie rods ② to make their lengths shorter (less toe-in).**

NOTE:

- When loosening or tightening the locknuts ①, hold the tie-rod at a flat section ② with a wrench.
- The length of the threads ③ of both rod ends must be same.

- Tighten the locknuts.

Rod End Locknut:
43 Nm (4.3 m • kg, 31 ft • lb)

- Place the vehicle back on the ground.
- Compress the suspension by pushing down on the front bumper.

4. Recheck:
   - Toe-in
     Out of specification → Repeat adjustment steps.

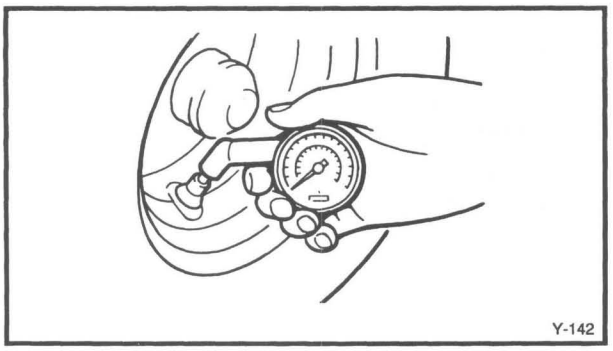
Y-142

TIRE AND WHEEL INSPECTION

1. Measure:
   - Air pressure
     Out of specification → Adjust.

Tire Pressure: (Front and Rear)
FOR G14-A:
108 kPa (1.1 kg/cm^2, 16 psi)
FOR G14-E:
137 kPa (1.4 kg/cm^2, 20 psi)

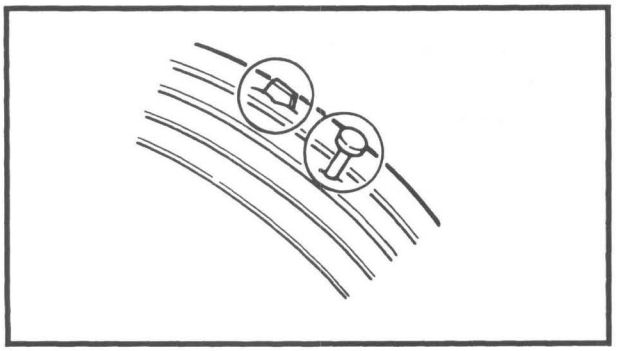

2. Inspect:
   - Tire surfaces
     Wear/Damage/Cracks/Imbedded objects → Replace.
   - Wheels
     Damage/Bends → Replace.
     Never attempt even small repairs to the wheel.

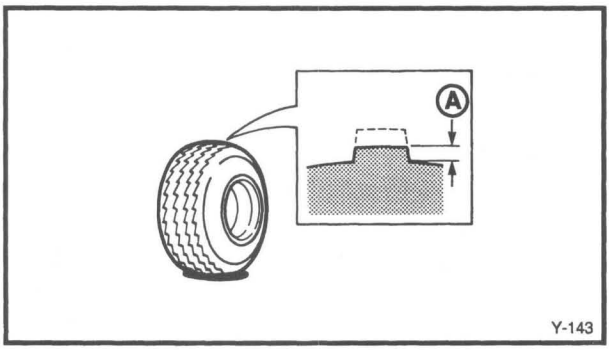

Y-143

3. Measure:
   - Tire tread depth Ⓐ
     Out of specification → Replace.

Minimum Tire Tread Depth Ⓐ:
(Front and rear)
1.0 mm (0.04 in)

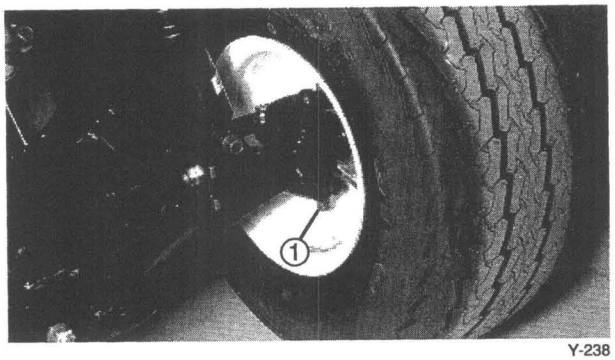

Y-238

FRONT WHEEL BEARING INSPECTION

1. Apply parking brake. Jack up the front of the car.
2. Spin the wheel by hand. Touch the knuckle or kingpin ① while spinning the wheel. Excessive vibration → Replace bearings. Refer to CHAPTER 3 "FRONT WHEEL" section.

REAR AXLE BEARING INSPECTION

1. Apply the parking brake, loosen the rear wheel nuts.
2. Block the front wheels. Jack up the rear of the car.
3. Remove:
   - Rear wheels
   - Brake drums

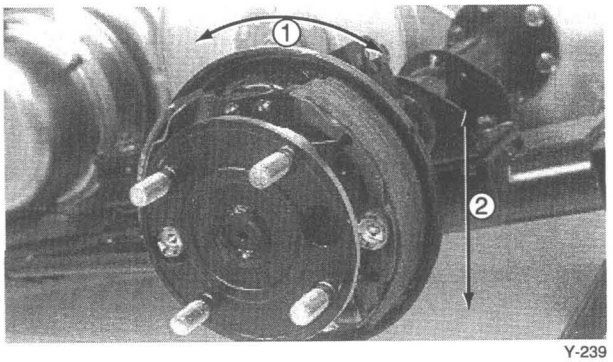

Y-239

4. Turn ① the rear axle slowly by hand.
   Roughness → Replace bearing.
5. Gently rock ② the rear axle up and down.
   Noticeable free play → Replace bearing/ Replace axle (G14-A). Refer to CHAPTER 3 "REAR AXLE WHEEL" section.

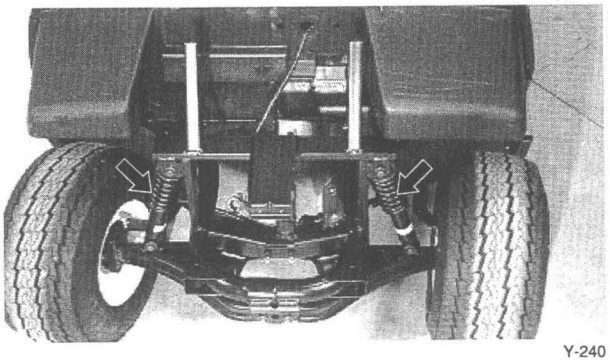
Y-240

SHOCK ABSORBER INSPECTION

1. Inspect:
   - Oil leakage
     Oil leaks → Replace shock absorber.
   - Coil spring
     Fatigue/Cracks/Damage → Replace shock absorber.
     Refer to CHAPTER 3 "FRONT SUSPENSION" and "REAR SUSPENSION" section.

Pivot Bolt-Nut:
(Upper and Lower)
32 Nm (3.2 m • kg, 23 ft • lb)

ELECTRICAL (FOR G14-A)

SPARK PLUG INSPECTION

1. Remove:
   - Remove:
   - Spark plug
2. Inspect:
   - Spark plug type
     Incorrect → Replace.

Standard Spark Plug:
BPR2ES or BPR4ES

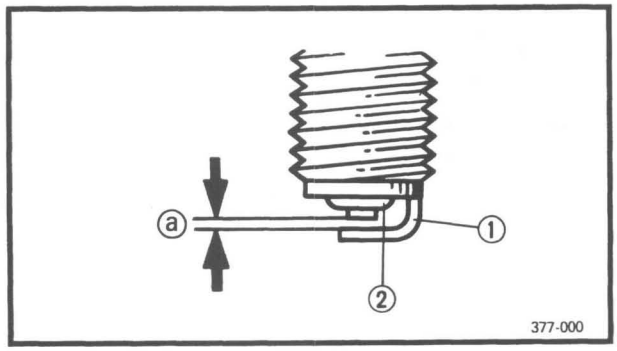

3. Inspect:
   - Electrode ①
     Wear/Damage → Replace.
   - Insulator ②
     Abnormal color → Replace.
     Normal color is a medium-to-light tan color.
4. Replace spark plug if cleaning appears necessary.
5. Measure:
   - Plug gap ⓐ
     Use a Wire Gauge or Feeler Gauge.
     Out of specification → Regap.

Spark Plug Gap:
0.7 ~ 0.8 mm (0.028 ~ 0.031 in)

6. Tighten:
   - Spark Plug

Spark Plug:
20 Nm (2.0 m • kg, 14 ft • lb)

⚠ WARNING

When removing or installing the spark plug, be careful not to damage the insulator. A damaged insulator could allow external sparks, which could lead to explosion or fire.

NOTE:
- Before installing a spark plug, clean the gasket and mating plug surface.
- Finger-tighten the spark plug before tightening at the specified torque.

STARTER BELT INSPECTION

1. Disconnect:
   - Rubber joint from carburetor
   - Corrugated air intake hose
   - Crankcase breather hose

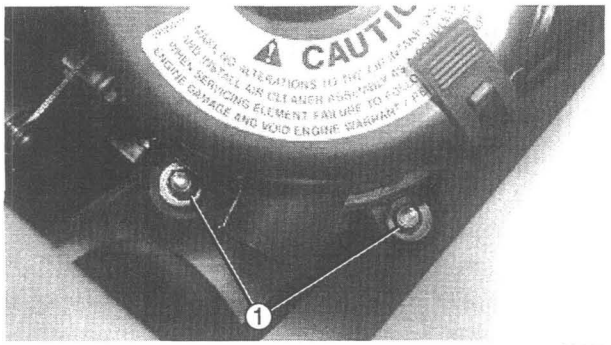

Y-328

2. Remove:
   - Holding bolts ①
   - Air cleaner case
3. Inspect:
   - Starter belt
     Wear/Cracks/Damage → Replace.

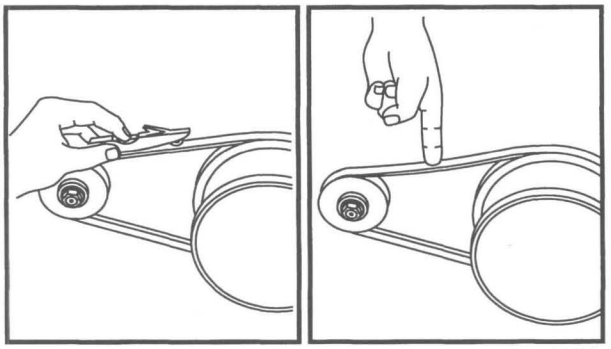

Y-105

4. Check:
   - Belt tension
     Out of specification → Adjust.
     Use a belt tension indicator (e.g., Gates 'Krikit' or equivalent), or depress the center of the belt with a finger.

Starter Belt Tension ⓐ:
8 ~ 12 mm/10 kg
(0.31 ~ 0.47 in/22 lb)

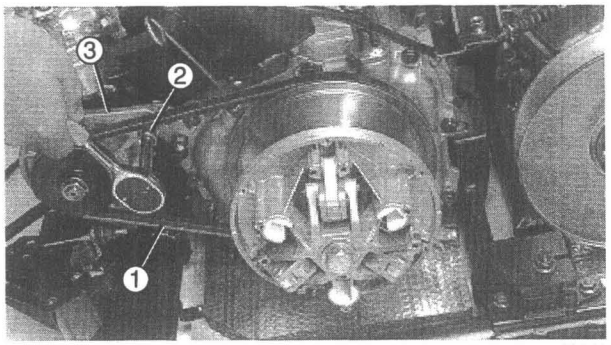

Y-241

Belt tension adjustment steps:
- Loosen the nut ①.
- Loosen the belt tension bolt ②.
- Adjust the tension by swinging the starter ③.
- Tighten the tension bolt ② first, then tighten the nut ①.

Belt Tension Bolt-Nut ②:
14 Nm (1.4 m • kg, 10 ft • lb)
Holding Bolt-Nut ①
53 Nm (5.3 m • kg, 38 ft • lb)

NOTE:
If the specified value can not be obtained with the tension adjusting position at the maximum, replace the belt.

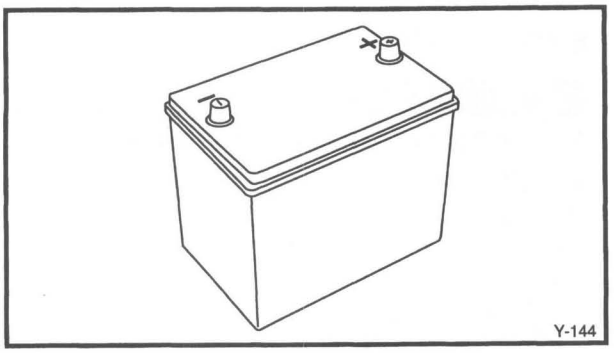

BATTERY INSPECTION

⚠ WARNING

Battery electrolyte is dangerous; it contains sulfuric acid and is therefore poisonous and highly caustic.

Always follow these precautionary measures:

- **Avoid bodily contact with electrolyte as it can cause severe burns or permanent eye injury.**
- **Wear protective eye gear when handling or working near batteries.**

Antidote (EXTERNAL):

- **SKIN - flush with water.**
- **EYES - flush with water for 15 minutes and get immediate medical attention.**

Antidote (INTERNAL):

- **Drink large quantities of water or milk, follow with milk of magnesia, beaten egg, or vegetable oil. Get immediate medical attention.**

Batteries also generate explosive hydrogen gas. Therefore you should always follow these precautionary measures:

- **Charge batteries in a well-ventilated area.**
- **Keep batteries away from fire, sparks, or open flames (e.g., welding equipment, lighted cigarettes, etc.)**
- **DO NOT SMOKE when charging or handling batteries.**

KEEP BATTERIES AND ELECTROLYTE OUT OF REACH OF CHILDREN.

1. Inspect:
   - Battery case
     Cracks/Damage → Replace.
   - Battery hold-down bracket
     Loose → Tighten.
   - Dirty → Clean with wire brush or solution of baking soda and water.
     Poor connection → Correct.

NOTE:

After cleaning the terminals, apply grease lightly to the terminal posts.

Replace the battery if:

- Battery voltage will not rise to manufacturer's specified value. (Usually a stabilized open circuit voltage of 12.4 volts).
- Battery case or terminals are damaged.

BATTERY CHARGING

⚠ WARNING

Follow charger manufacturer's instructions when charging batteries. Never use a charger without these instructions.

CAUTION

If maintenance-free batteries are charged at ampere rates or periods of time greater than those specified by the manufacturer, the life of the battery may be shortened.

- Charge battery following manufacturer's instructions on the charger.

⚠ WARNING

Always turn the charger to the "OFF" position before connecting the leads to the battery.

NOTE:

Periodic charging is necessary during extended storage.

ELECTRICAL (FOR G14-E)

BATTERY CHARGING

The batteries must be charged properly before using for the first time. This initial charge will prolong the life of the batteries.

CAUTION

To insure maximum battery performance be sure to:

- **Charge a new battery before use.**
- **Maintain proper electrolyte level.**
  Be especially careful not to overfill the batteries, or allow the electrolyte level to drop below the top of the plates.
- **Do not overcharge the batteries.**

Failure to observe these points will result in a shortened battery life.

NOTE:

Periodic charging is necessary during extended storage.

Battery charging steps:

- Before charging: only add distilled water if fluid is below the top of the plates, and then add just enough to cover plates.
- After charging: check that the fluid level is approximately 1/4 to 1/2 inch above the plates. If the fluid level is low, carefully add distilled water. Adding distilled water after charging prevents boil over.
- Add only distilled water after a battery has been placed in service, never add more acid to battery.

⚠ WARNING

Battery electrolyte is dangerous; it contains sulfuric acid and is therefore poisonous and highly caustic.

Always follow these precautionary measures:

- **Avoid bodily contact with electrolyte as it can cause severe burns or permanent eye injury.**

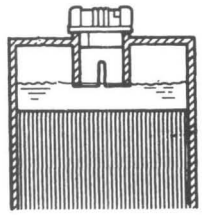

Y-145

- **Wear protective eye gear when handling or working near batteries.**

Antidote (EXTERNAL):

- **SKIN - Flush with water.**
- **EYES - Flush with water for 15 minutes and get immediate medical attention.**

Antidote (INTERNAL):

- **Drink large quantities of water or milk, follow with milk of magnesia, beaten egg, or vegetable oil. Get immediate medical attention.**

Batteries also generate explosive hydrogen gas. Therefore you should always follow these precautionary measures:

- **Charge batteries in a well-ventilated area.**
- **Keep batteries away from fire, sparks, or open flames (e.g., welding equipment, lighted cigarettes, etc.)**
- **DO NOT SMOKE when charging or handling batteries.**

KEEP BATTERIES AND ELECTROLYTE OUT OF REACH OF CHILDREN.

The following is a summary of the charging steps. Do not attempt to recharge the golf car's batteries without thoroughly reading and understanding the owner's manual provided with your charger.

- Turn the main switch to the OFF position.
- With the charger properly connected and grounded (see charger's owner's manual), insert the DC output plug into the golf car receptacle.
- Monitor the ammeter on the charger according to instructions found in the charger's owner's manual.
- The charger will turn off automatically when the batteries reach full charge.

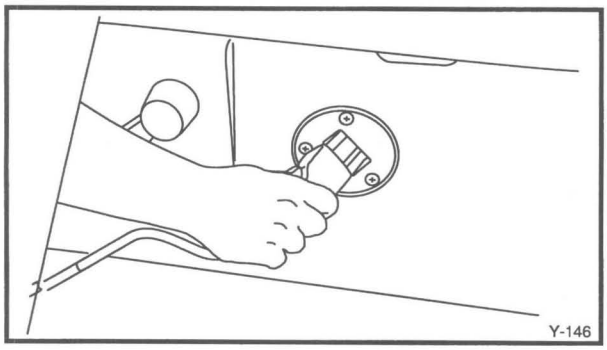

⚠ WARNING

Do not unplug the charger from the receptacle of the car until the charger is turned off. Unplugging an operating charger will cause sparks which could ignite explosive gases.

- After the charger has turned off, disconnect the DC output plug from the golf car receptacle by grasping the plug body and pulling the plug straight out of the receptacle.

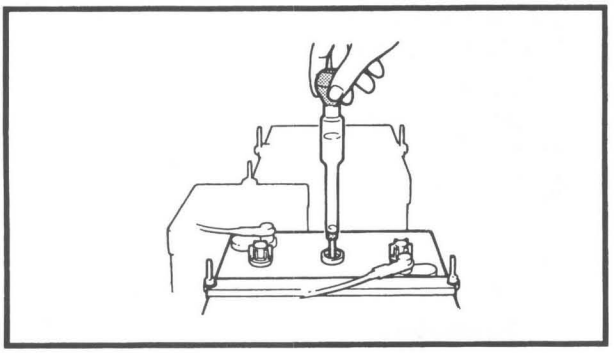

- Check the specific gravity of each cell with a hydrometer. If the hydrometer reading is below the specification, additional charging is necessary.

Temperature		Satisfactory Uncorrected Hydrometer Reading
°F	°C	
120	48.9	1.244
110	43.3	1.248
100	37.8	1.252
90	32.2	1.256
80	26.7	1.260
70	21.1	1.264
60	15.6	1.268
50	10.0	1.272
40	4.4	1.276
30	-1.1	1.280

- Install the filler caps, and thoroughly wipe off the fluid around the filler caps.

Preferable charging:

- For the first ten rounds, new batteries should go only 18 holes between charges.
- A 20 minute charge between rounds helps extend battery life.
- Organize and store the cars so that they can be used equally.
- The batteries should be charged every day if used. If they are not used and checking shows that catch-up charging is not required, they should not be charged.

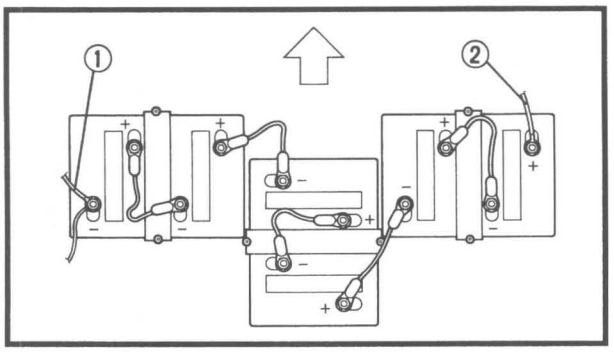

BATTERY INSPECTION

1. Remove:
   - Battery leads
   - Batteries

⚠ WARNING

- **Always disconnect the negative lead ① first.**
- **Insulate wrenches with tape to avoid short circuiting of the batteries.**

② To solenoid relay.

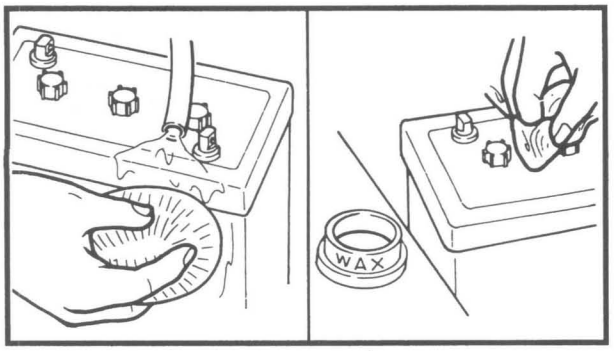

2. Wash the battery tops, sides, and surrounding area with baking soda dissolved in water. Be careful not to get this solution into the batteries. After drying, coat the battery tops with a car wax.

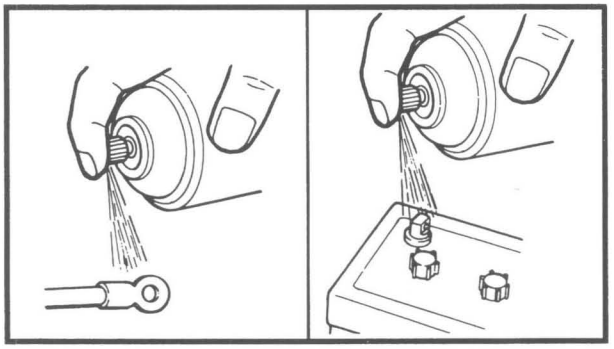

3. Inspect:
   - Lead terminals
   - Battery terminals
     Corrosion → Clean.

Terminal cleaning steps:

- Spray the terminals with a baking soda and water mixture, then allow a few minutes for the solution to work.
- Rinse with low pressure water
- Allow terminals to dry and coat with anti-corrosion spray.

4. Inspect:
   - Hold-downs
     Use a wire brush.
     Corrosion → Clean/Replace.
     After cleaning, rinse with water. Then repaint with a corrosion resistant paint.

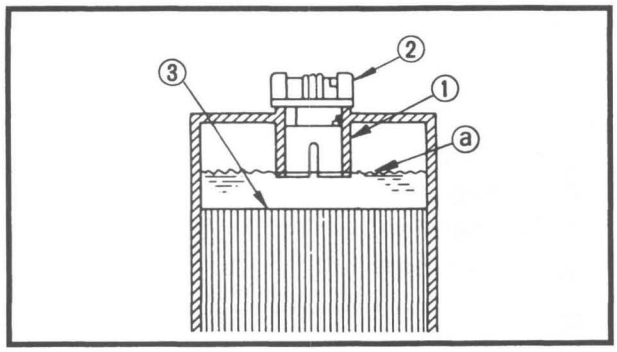

5. Check:
   - Electrolyte level ⓐ
     Below level → Add distilled water after charging.

ⓐ Proper fill level - DO NOT OVER FILL!
① Level indicator
② Cap
③ Plate

6. Inspect:
   - Cap vent
     Contamination → Clean.
7. Measure:
   - Specific gravity
     Use a Hydrometer.
     Less than 1.260 → Charge battery.
     Refer to "BATTERY CHARGING" section.

	**Hydrometer:** **YU-03036, 90890-03036**

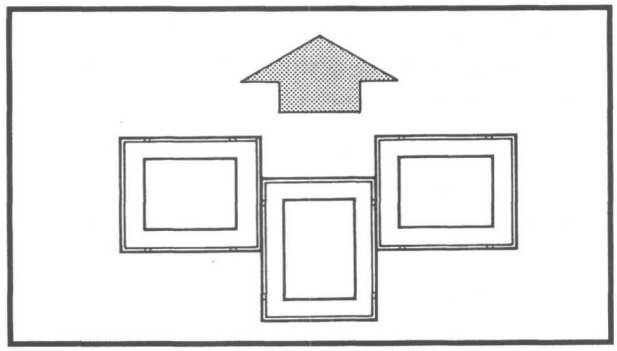

8. Install the battery trays in place as shown.

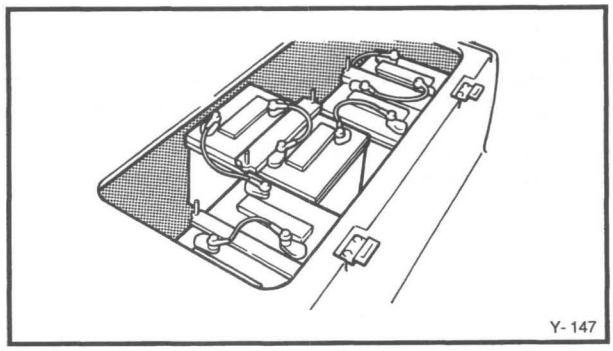

9. Install:
   - Batteries

	**Battery Holder:** **2 Nm (0.2 m • kg, 1.4 ft • lb)**

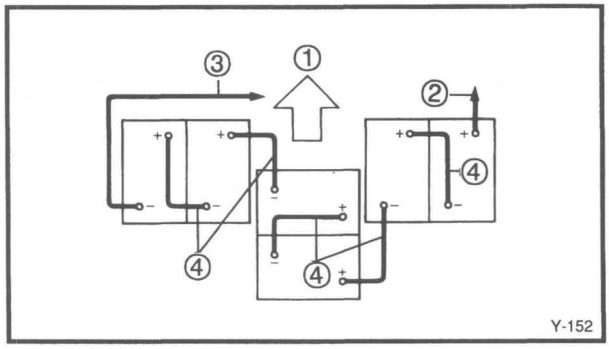

10. Connect:
    - Battery leads
      See illustration

① Forward
② To relay
③ To controller
④ Between batteries

Terminal Nut:
6 Nm (0.6 m • kg, 4.3 ft • lb)

⚠ WARNING

Connect the negative lead ③ last.

CAUTION

Using a wire brush, clean both the contact surface of the battery terminal and lead clamp until both have a bright metallic shine for good electrical contact.
Apply specially treated felt washers, an anti-corosion spray, or grease, to prevent corrosion.

② To solenoid relay

CHARGE RECEPTACLE INSPECTION

1. Inspect
   - Receptacle contacts
     Damage/Loose/Burned → Replace receptacle.

⚠ WARNING

Damaged receptacle contacts can cause excessive resistance (heat) and lead to fire.

⚠ WARNING

Batteries also generate explosive hydrogen gas. Therefore you should always follow these precautionary measures:

- **Charge batteries in a well-ventilated area.**
- **Keep batteries away from fire, sparks, or open flames (e.g., welding equipment, lighted cigarettes, etc.)**
- **DO NOT SMOKE when charging or handling batteries.**

KEEP BATTERIES AND ELECTROLYTE OUT OF REACH OF CHILDREN.

1. Battery Discharge Testing - Why

The purpose of the discharge load test is to determine how many minutes it will take to bring the total voltage of a freshly charged 48 or 36 volt battery pack to 42 or 31.5 volts respectively. This test represents the maximum work or run time capability of a 48-volt battery pack at 80°F to fall to 42 volts. A good set of 36-volt batteries should also take approximately 70 minutes to drop to 31.5 volts. Seventy minutes should deliver 36 holes of golf for most courses. A shorter time period will indicate that one or more batteries need service or replacement.

When you are load testing, you will need a load tester and a high quality digital voltmeter capable of reading at least 55 volts DC. Use the voltmeter to monitor the overall voltage decrease of the pack and the decreasing voltage of each individual battery during testing. Individual batteries that decrease at a faster rate are the weaker ones. Note the weak batteries. The weaker batteries will require careful measurement after the discharge tester shuts off. Once the weaker batteries are identified they need to be replaced with ones of comparable age and strength of the remaining pack.

2. Battery Discharge Testing - Things to Be Aware Of

Non-functioning chargers (or just unplugged chargers) can create frustrating problems, especially if cars are not returned to the same charger every night. Look for tripped circuit breakers, damaged cords and plugs. Battery problems may be charger induced.

Design a schedule that allows discharge testing on one car per day or at least every other day. Follow your plan faithfully. Test each car once the first year and twice each succeeding year. If your course exceeds the national average of 250 rounds each year then your discharge testing schedule must be increased accordingly. Consult your Yamaha service representative for help with schedule adjustments. If you start out discharge testing an older fleet with suspicious batteries then at least 10% (i.e. 10 cars out of 100) should be tested. These results will give you a feel for your replacement battery needs.

Obtain a good quality discharge tester such as the Lester 17770. Carefully follow the procedure found in the Section 3 "Step by Step" Testing.

Remember that seventy minutes is the industry standard considered adequate for 36 holes of play but as cars enter their third and fourth years of service, it is normal for a few batteries to fail. Widespread failures or lack of 36-hole performance in the second year is not normal.

Ambient temperature has an effect on discharge times. When temperatures are low, discharge times decrease. The chart on page 2-49 is helpful in predicting the effects of temperature on discharge testing.

Be sure that you do the **loaded individual battery measurements** with the battery pack fully charged to 42 (48-volt) or 31.5 (36-volt). If you **do not** do this part of the test immediately after the tester shuts off, the batteries will *"recover"* as they sit. Recovered batteries will give false readings. If more than a few minutes elapse before you do individual battery measurements, turn the discharge tester back on. Allow the tester to run until the total battery pack voltage is again approaching the shut off point (**31.5 volts** for 36-volt cars and **42 volts** for 48-volt cars). This will prevent a false "good" voltage measurement from a recovered battery. **Be certain you understand this paragraph before you turn your discharge tester on for the first time. You cannot achieve accurate results without a complete understanding of the testing process.**

3. Battery Discharge Testing "Step by Step"

Before you start testing do the following preliminary checks.

a. Fully charge the batteries (a full charger cycle).
b. Inspect all cables and connections.
c. Check the water level in each cell and add water as necessary.

d. Start the charger and let it finish charging again.
e. Let the batteries cool for 5 minutes.

⚠ WARNING

Batteries also generate explosive hydrogen gas. Therefore you should always follow these precautionary measures:

- **Charge batteries in a well-ventilated area.**
- **Keep batteries away from fire, sparks, or open flames (e.g., welding equipment, lighted cigarettes, etc.)**
- **DO NOT SMOKE when charging or handling batteries.**

KEEP BATTERIES AND ELECTROLYTE OUT OF REACH OF CHILDREN.

The following instructions are specifically for the Lester 17770 Discharge Tester. You will need a thermometer, discharge tester and a digital voltmeter for the following tests. Attach the discharge tester, be sure to observe polarity. Heavily coated battery terminals may not provide good electrical connections. Clean if necessary.

1. Record surface voltage from the discharge tester readout panel. Record the ambient temperature.
2. Turn on the discharge tester. Wait at least 3 minutes. If you have a bad connection (or reverse polarity) the tester will shut off in 3 minutes. Correct any problems.
3. Let the tester run until it shuts off and **immediately** record the surface voltage from the discharge tester readout. Restart the charger and let it run until the voltage reaches 42 volts (48-volt car) or 31.5 volts (36-volt car).
4. While the tester is still connected measure and record each individual battery voltage. Look over the voltage measurements you just recorded. A difference of 0.5 volts from the highest to lowest measurement indicates a weak battery.
5. Turn off the discharge tester. Wait until the fan stops and then disconnect the battery leads.

CAUTION

If the fan is running and you disconnect the unit a spark will be produced. The chart on 2-50 is a handy place to record your measurements.

DISCHARGE MINUTES ADJUSTED FOR TEMPERATURE

Discharge Minutes	Temperature (F°)										
	80	**75**	**70**	**65**	**60**	**55**	**50**	**45**	**40**	**35**	**30**
105	105										
100	100	103	107								
95	95	98	101	105							
90	90	93	96	100	103	107					
85	85	88	91	94	97	101	105				
80	80	83	85	88	92	95	99	103			
75	75	77	80	83	86	89	93	97	101	105	
70	70	72	75	77	80	83	87	90	94	98	103
65	65	67	69	72	75	77	80	84	87	91	96
60	60	62	64	66	69	71	74	77	81	84	88
55	55	57	59	61	63	65	68	71	74	77	81
50	50	52	53	55	57	60	62	64	67	70	74
45	45	46	48	50	52	54	56	58	60	63	66
40	40	41	43	44	46	48	50	52	54	56	59
35	35	36	37	39	40	42	43	45	47	49	51
30	30	31	32	33	34	36	37	39	40	42	44
25	25	26	27	28	29	30	31	32	34	35	37
20	20	21	21	22	23	24	25	26	27	28	29
15	15	15	16	17	17	18	19	19	20	21	22
10	10	10	11	11	11	12	12	13	13	14	15

$$\text{ADJUSTED DISCHARGE MINUTES} = \frac{\text{DISCHARGE MINUTES}}{1-(((80-\text{TEMP}) / 100)*.64)}$$

BATTERY DISCHARGE CHART

CAR# __________

DATE ____ / ____ / ____

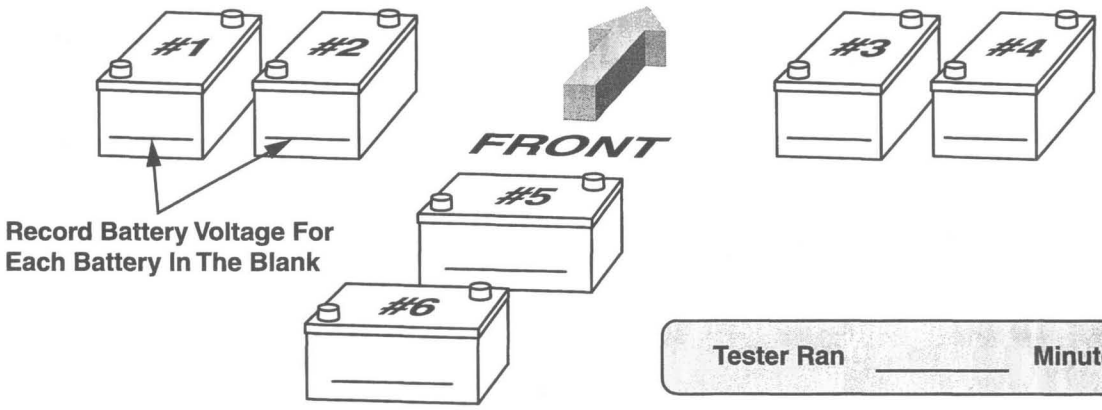

Record Battery Voltage For Each Battery In The Blank

Tester Ran ________ Minutes

CAR# __________

DATE ____ / ____ / ____

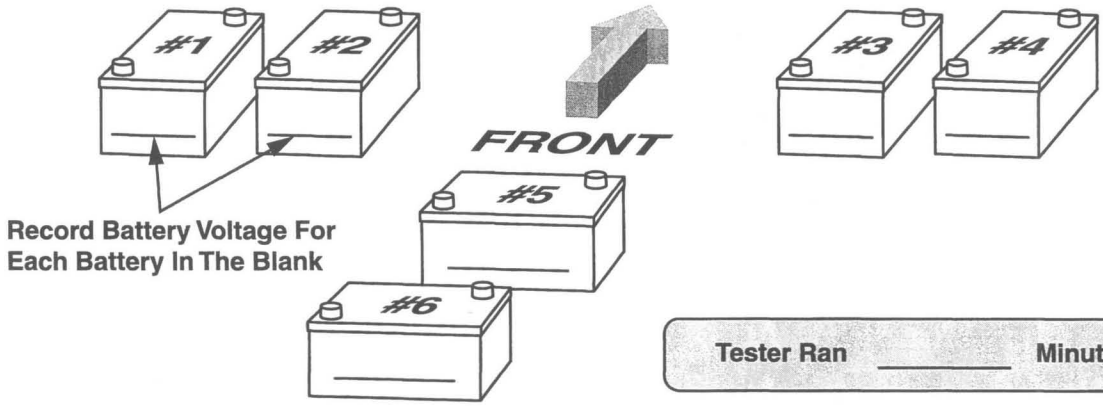

Record Battery Voltage For Each Battery In The Blank

Tester Ran ________ Minutes

CAR# __________

DATE ____ / ____ / ____

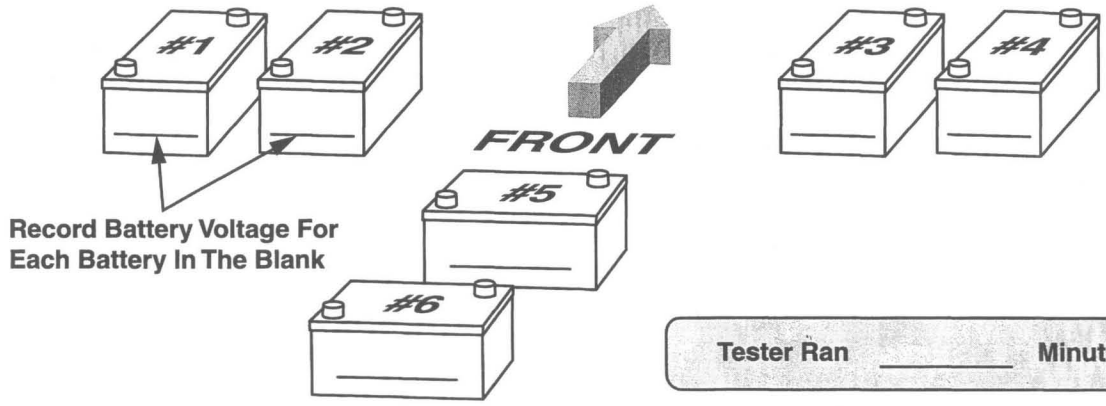

Record Battery Voltage For Each Battery In The Blank

Tester Ran ________ Minutes

Record test results including individual battery voltages immediately after discharge test.

Restart the Discharge Tester after it reaches 42 volts or 31.5 volts (48 V car or 36 V car) immediately measure and record each battery's voltage in the boxes provided above.

CHAPTER 3
CHASSIS

CHASSIS

FRONT AND REAR BUMPER

REMOVAL

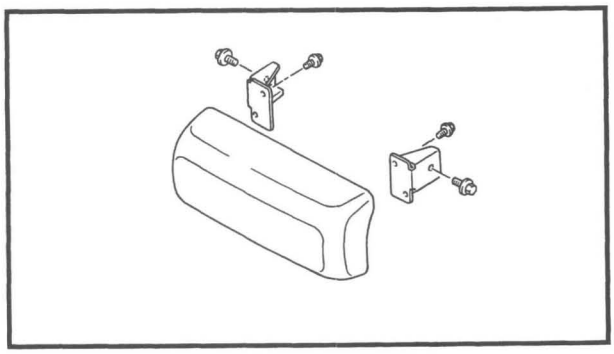

1. Remove:
   - Bolts
   - Front bumper
   - Cage nuts

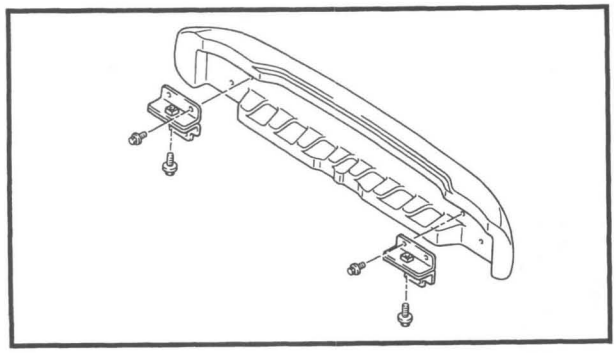

2. Remove:
   - Bolts
   - Rear bumper

INSTALLATION

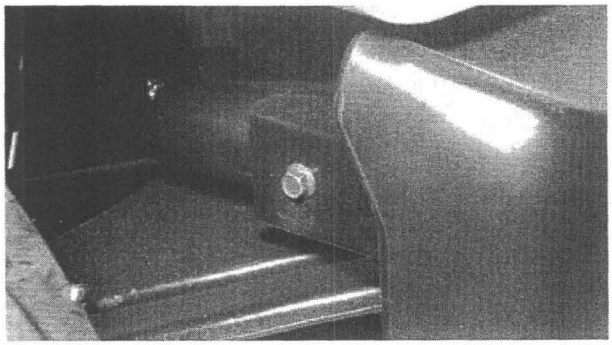

Y-244

1. Install:
   - Front bumper

   Reverse the "REMOVAL" procedures.

	**Tightening torque:** **23 Nm (2.3 m • kg, 17 ft • lb)**

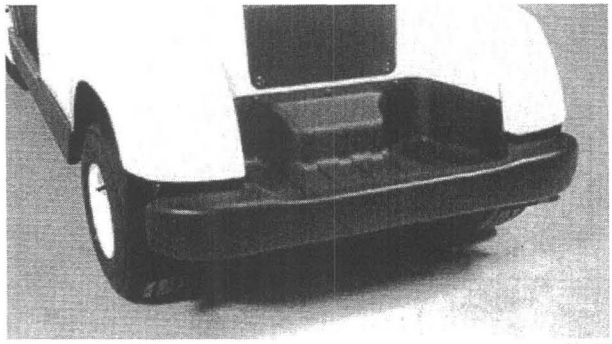

Y-245

2. Install:
   - Rear bumper

	**Tightening torque:** **64 Nm (6.4 m • kg, 46 ft • lb)**

BUMPERS

① Front bumper
② Front bumper stay
③ Rear bumper
④ Rear bumper stay

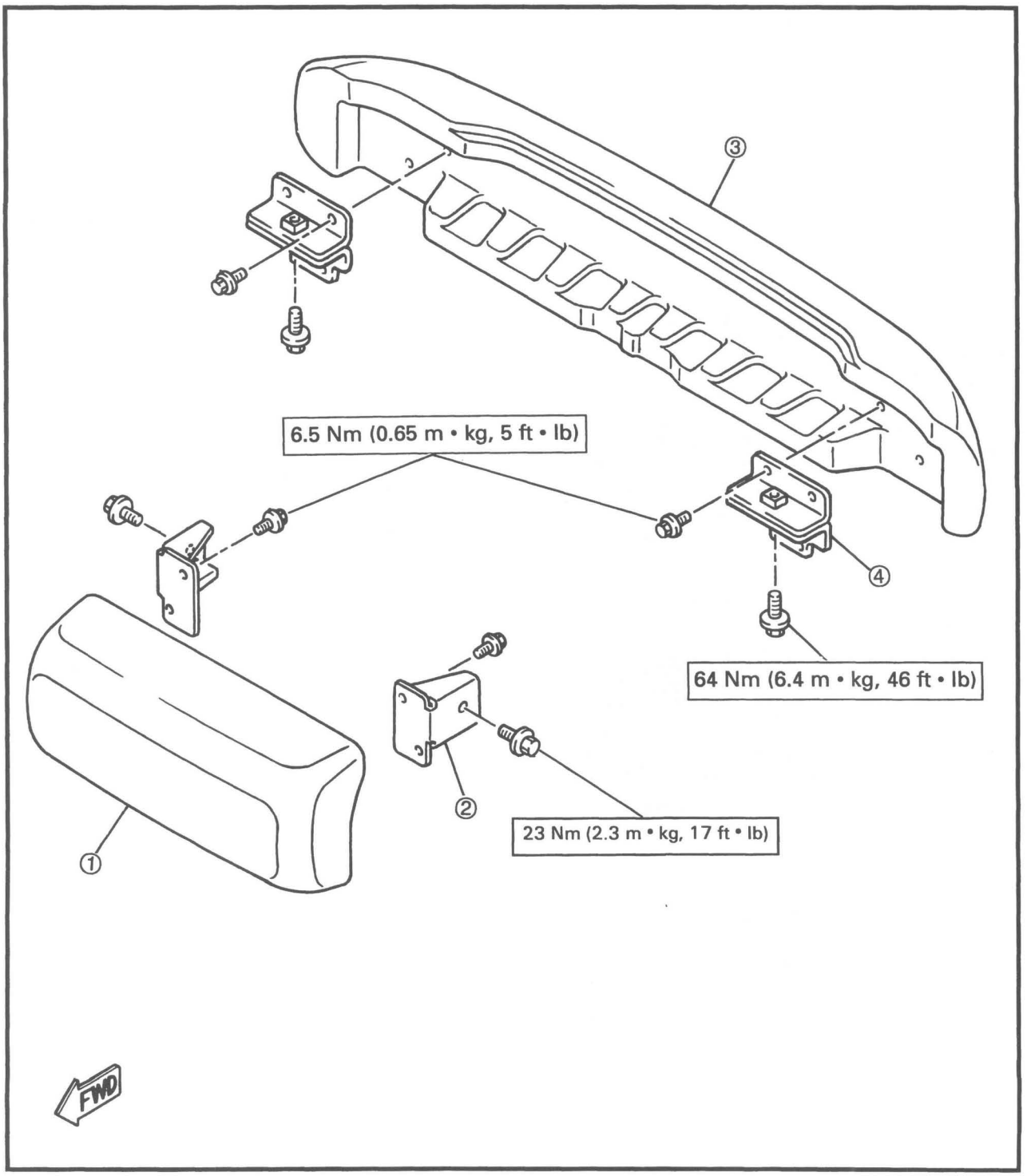

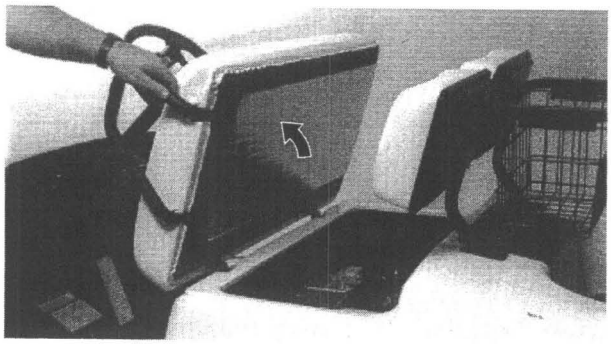

Y-246

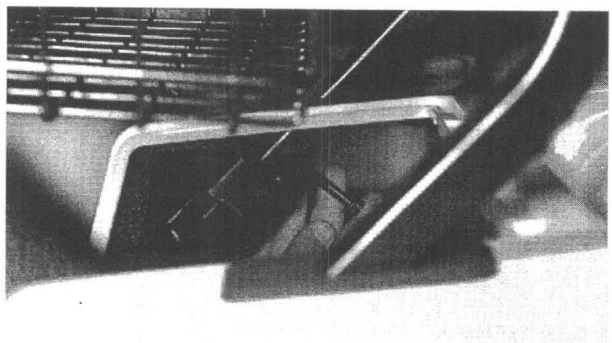

Y-247

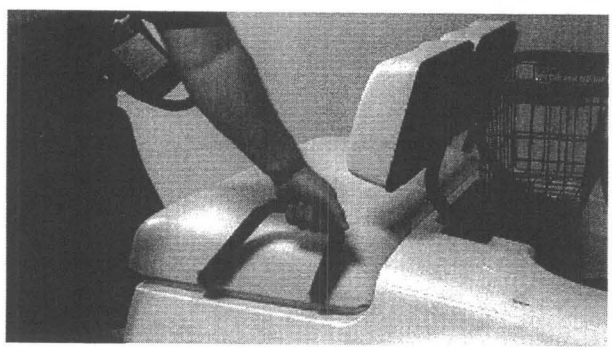

Y-248

SEAT

REMOVAL

1. Remove:
   - Seat
   - Rear access panel

2. Remove:
   - Bolts
   - Seat back support

INSTALLATION

1. Install:
   - Seat back support

	Tightening torque: **30 Nm (3.0 m • kg, 22 ft • lb)**

2. Install:
   - Seat

SEAT

① Seat
② Back seat
③ Arm rest
④ Seat back support
⑤ Seat hinge 2
⑥ Seat back cover
⑦ Seat retainer
⑧ Tapping screw
⑨ Self-locking nut
⑩ Silencer pad
⑪ Seat hinge 1

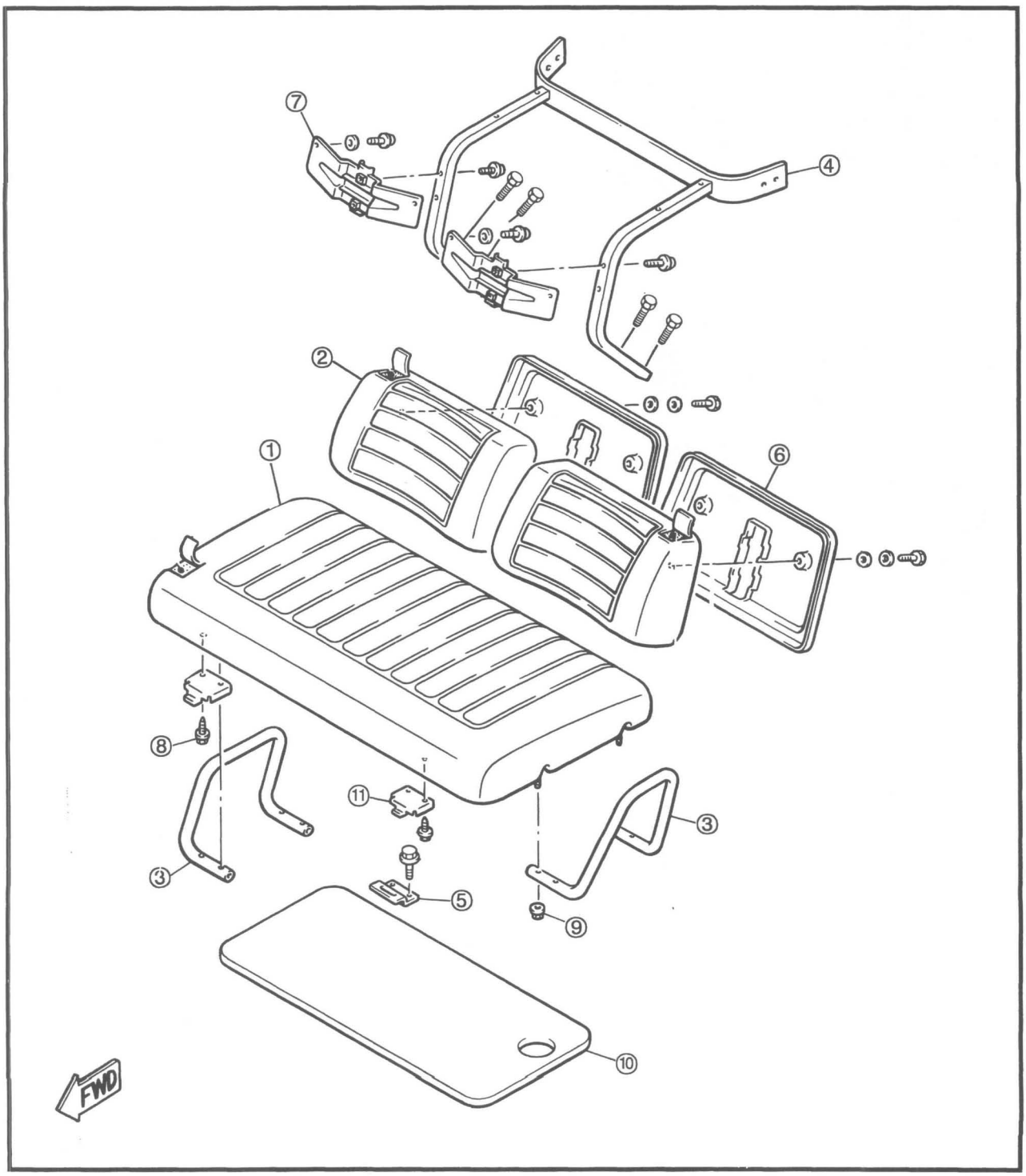

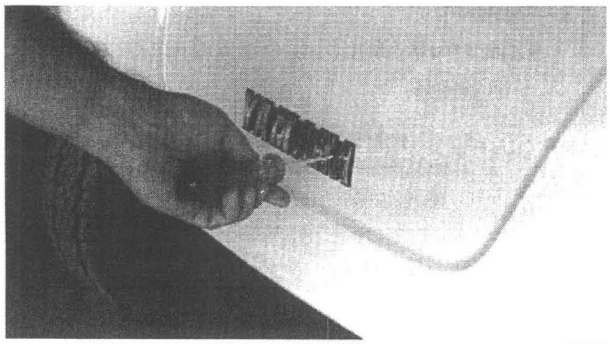

Y-249

FRONT COWLING REMOVAL

1. Remove:
   - Screws
   - Emblem

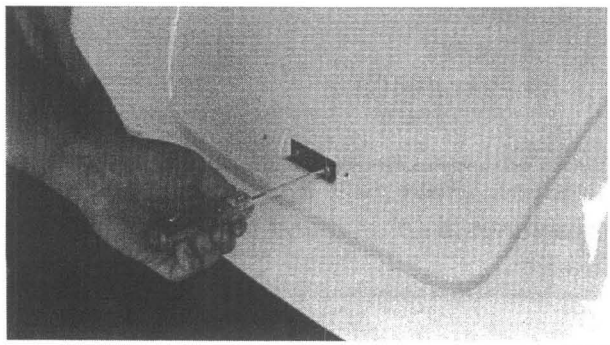

Y-250

2. Remove:
   - Screws
   - Plate

	Tightening Torque: **7 Nm (0.7 m • kg, 5.0 ft • lb)**

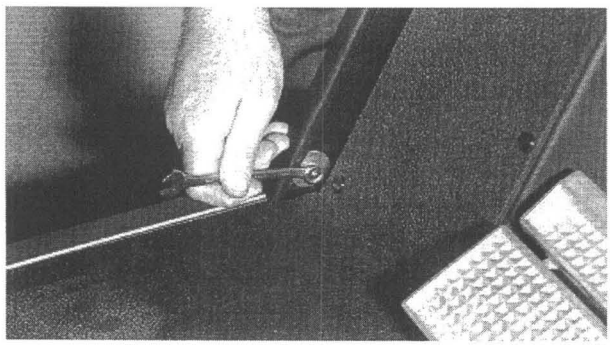

Y-251

3. Remove:
   - Nuts
   - Washers

	Tightening Torque: **2 Nm (0.2 m • kg, 1 ft • lb)**

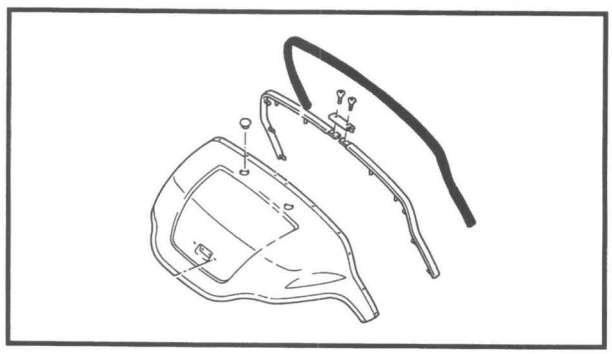

4. Remove:
   - Front cowling with trim

NOTE:
Use care not to pull rubber trim off of the plates it is mounted to.

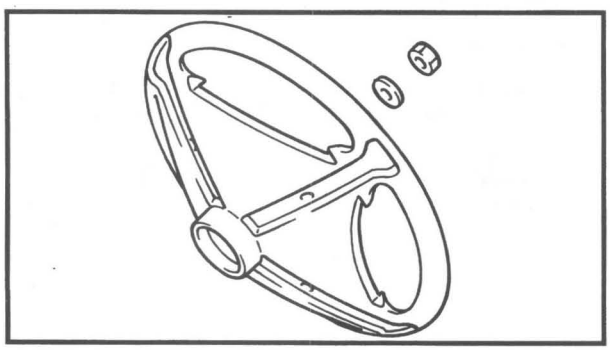

Front Storage Panel Removal

1. Remove:
   - Scorecard holder
   - Steering wheel nut
   - Washer
   - Steering wheel

NOTE:
The scorecard holder is removed by pressing its mounting pins from the back of the steering wheel.

2. Remove:
   - Cap nuts that hold front storage panel in place.

Tightening Torque:
8 Nm (0.8 m • kg, 5.8 ft • lb)

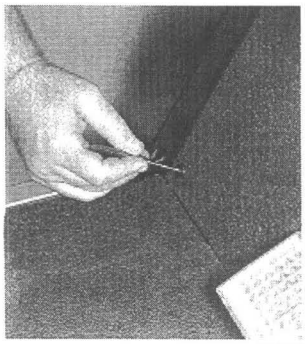
Y-252

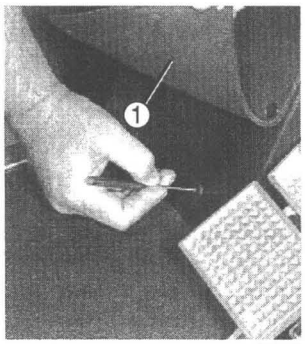

Y-253

3. Remove:
   - Rivets
   - Floor mat ①

NOTE:
Remove plastic rivets by depressing the pin in the center of the rivet with a punch or small screwdriver.

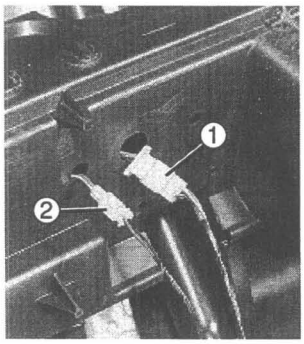

Y-413


Y-254

4. Disconnect:
   - Main switch lead
   - Oil warning lamp lead (G14-A)

5. Remove:
   - Screws
   - Beverage holder

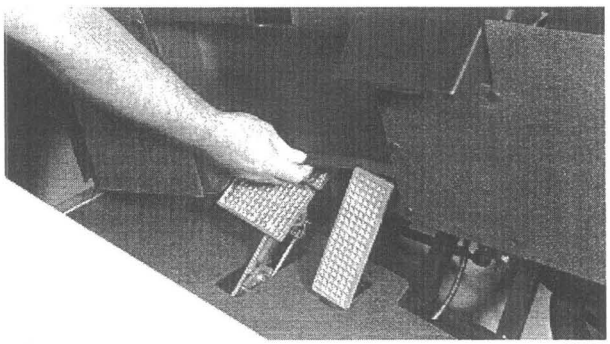
Y-255

6. Remove:
   - Front storage

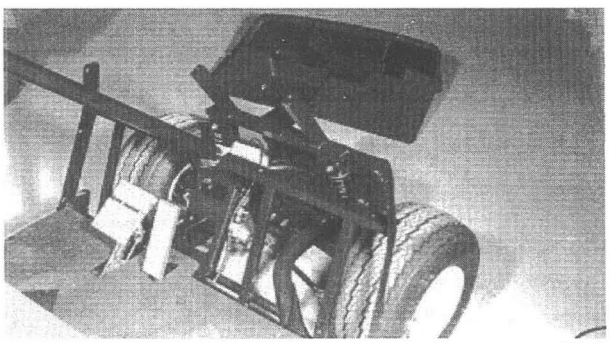
Y-256

INSTALLATION

Reverse the "REMOVAL" procedure.

Steering Wheel Nut Tightening Torque:
39 Nm (3.9 m • kg, 28 ft • lb)

FRONT COWLING

① Front cowling
② Front panel
③ Body protect plate
④ Plate
⑤ Holder housing
⑥ Protector cap
⑦ Tapping screw
⑧ Beverage holder
⑨ Hole cover
⑩ Warning label
⑪ Protector
⑫ Body protect plate
⑬ Protector 1

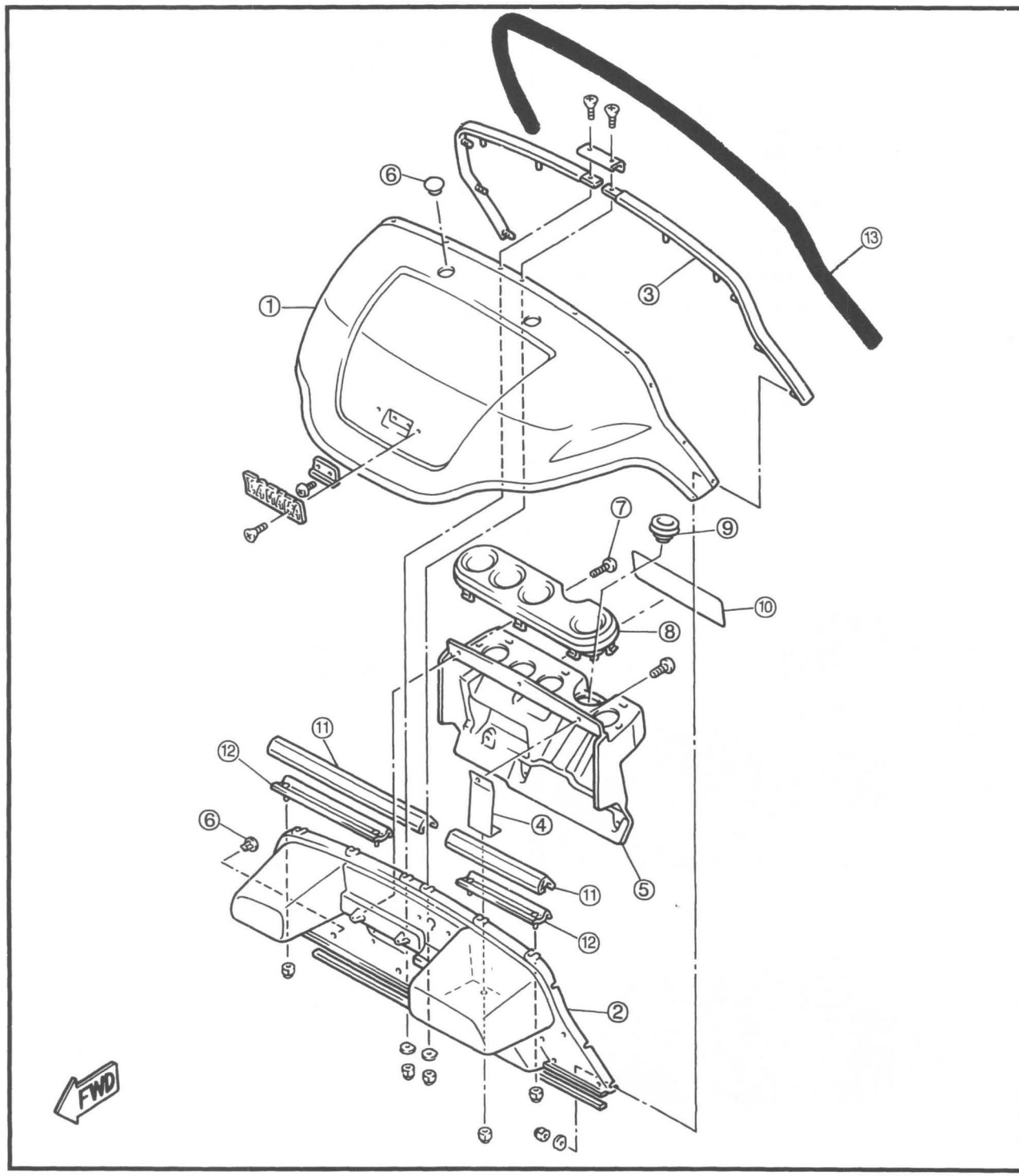

REAR COWLING

REMOVAL

1. Remove:
   - Seat
   - Seat back support

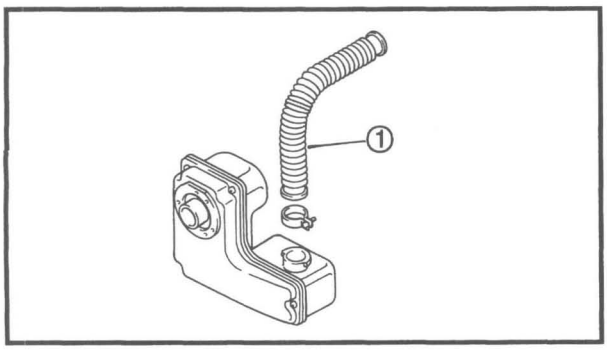

2. Disconnect
   - Corrugated hose ① to air filter (G14-A)
   - Choke cable (G14-A)

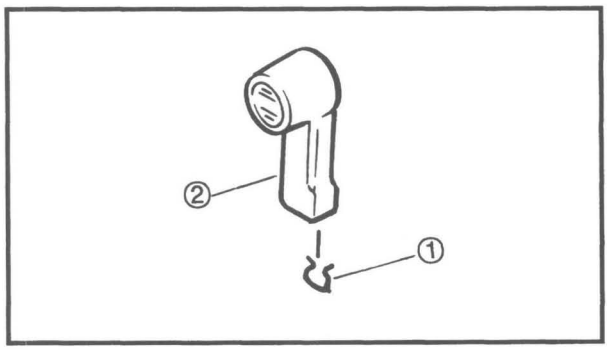

3. Remove:
   - Hairpin clip ①
     from handle shaft behind handle
   - Shift handle ②

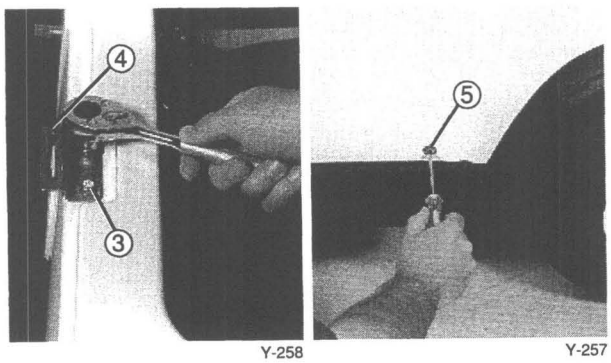

Y-258 Y-257

- Bolts ③
- Hinges ④
- Screws ⑤

Rear Floor Cover Removal

1. Remove:
   - Rivets
   - Screws
   - Rear floor cover

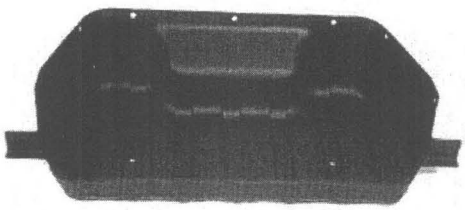

Y-259

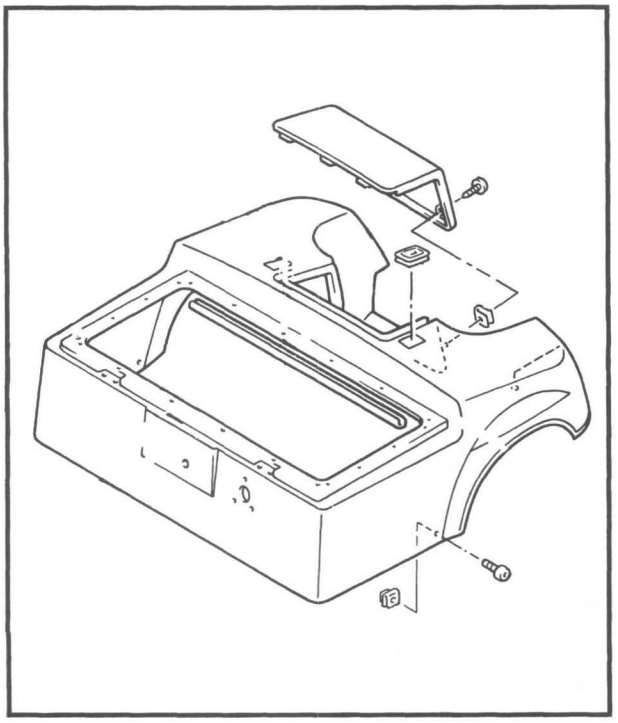

4. Remove:
   - Rear cowling

INSTALLATION

Reverse the "REMOVAL" procedure.

REAR COWLING FOR G14-A

① Rear cowling
② Rear floor cover
③ Blind rivet
④ Screw
⑤ Silencer pads
⑥ Access panel
⑦ Protector
⑧ Spring nut
⑨ Hex head socket bolt
⑩ Floor mat
⑪ Screw, with washers

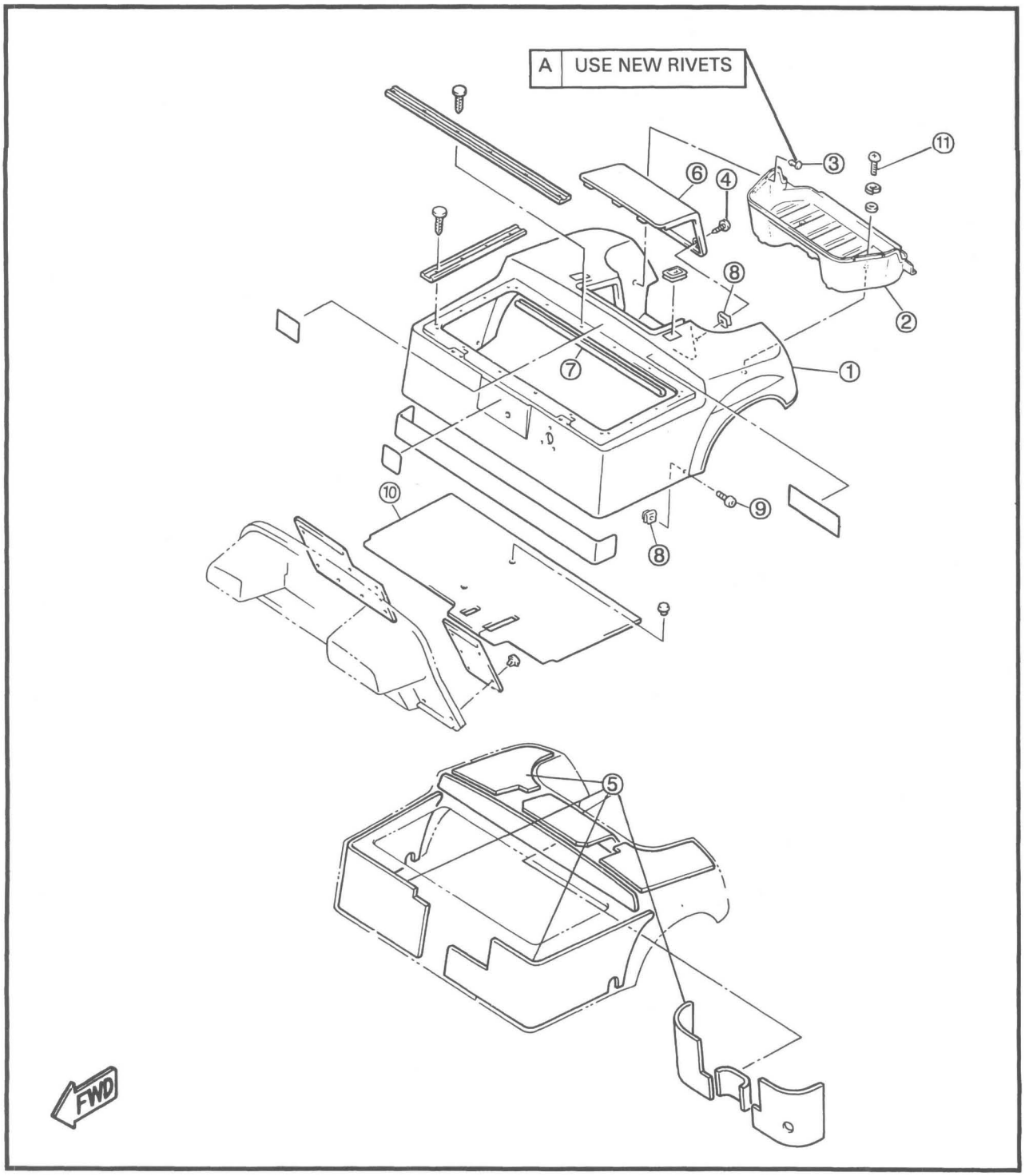

REAR COWLING FOR G14-E

① Rear cowling
② Rear floor cover
③ Access panel
④ Blind rivet
⑤ Spring nuts
⑥ Screw
⑦ Receptacle guide
⑧ Blind rivet
⑨ Screw, with washers

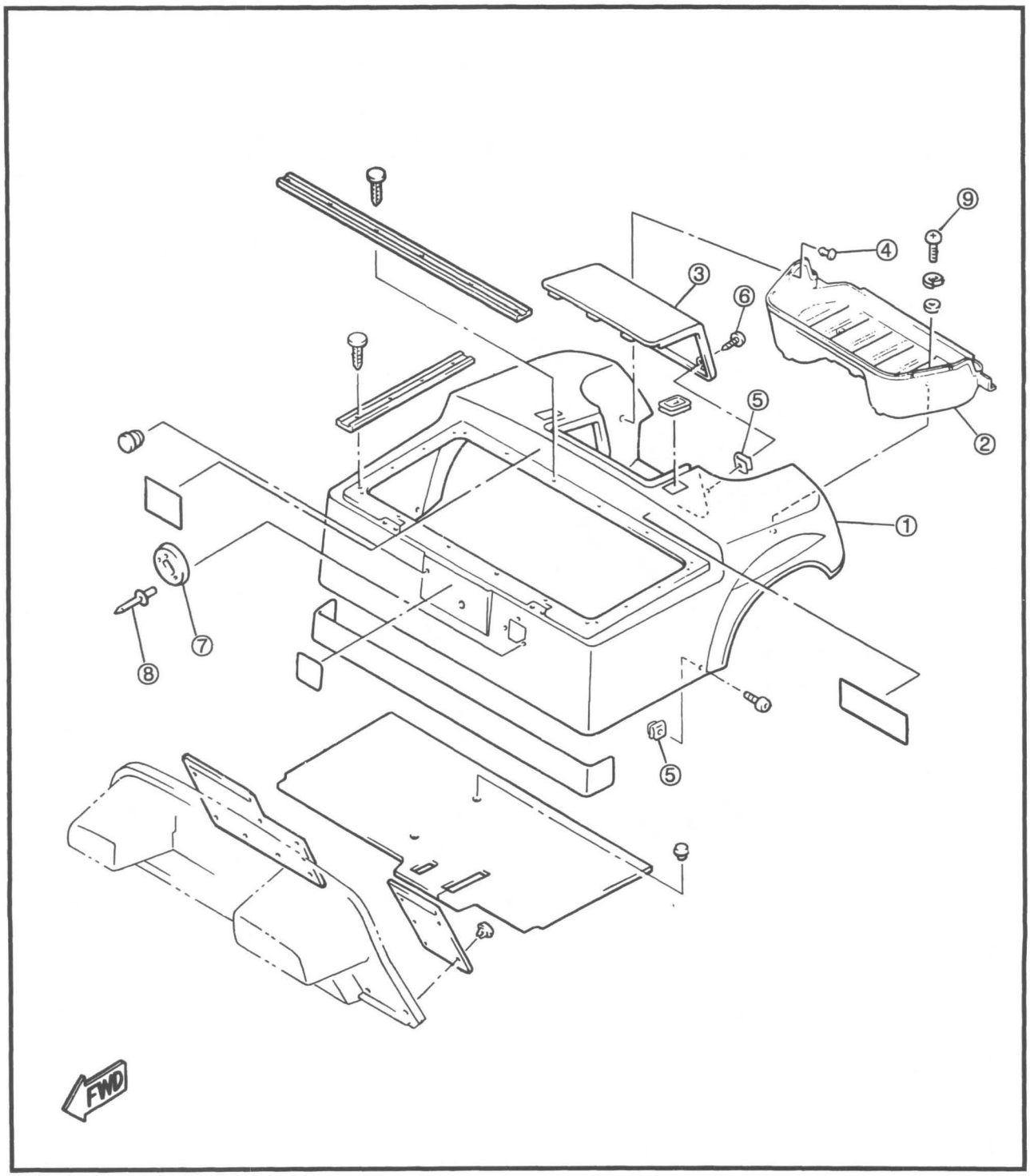

FRONT WHEEL

① Wheel nut
② Dust cover
③ Cotter pin
④ Hub nut
⑤ Conical washer
⑥ Hub bearing
⑦ Spacer
⑧ Hub
⑨ Oil seal
⑩ Knuckle
⑪ Front wheel

A	TIRE SIZE: 18 x 8.50-8.00/4PR
B	TIRE TYPE: TUBELESS (Sawtooth tread pattern)
C	TIRE PRESSURE: For G14-A 108 kPa (1.1 kg/cm^2, 16 psi) For G14-E 137 kPa (1.4 kg/cm^2, 20 psi)
D	WEAR LIMIT: 1.0 mm (0.04 in)

E	RIM SIZE: 7.00-I-8.00
F	WHEEL ALIGNMENT:
G	Toe-in Unloaded/Fully loaded: 1 ~ 11 mm (0.04 ~ 0.43 in)/Zero mm (Zero in)
H	Camber: Fully loaded: Zero deg (non-adjustable)
I	Caster: 7 deg (non-adjustable)
J	King pin inclination: 3 deg (non-adjustable)

NOTE:

Camber is not adjustable, but is affected by toe-in settings.

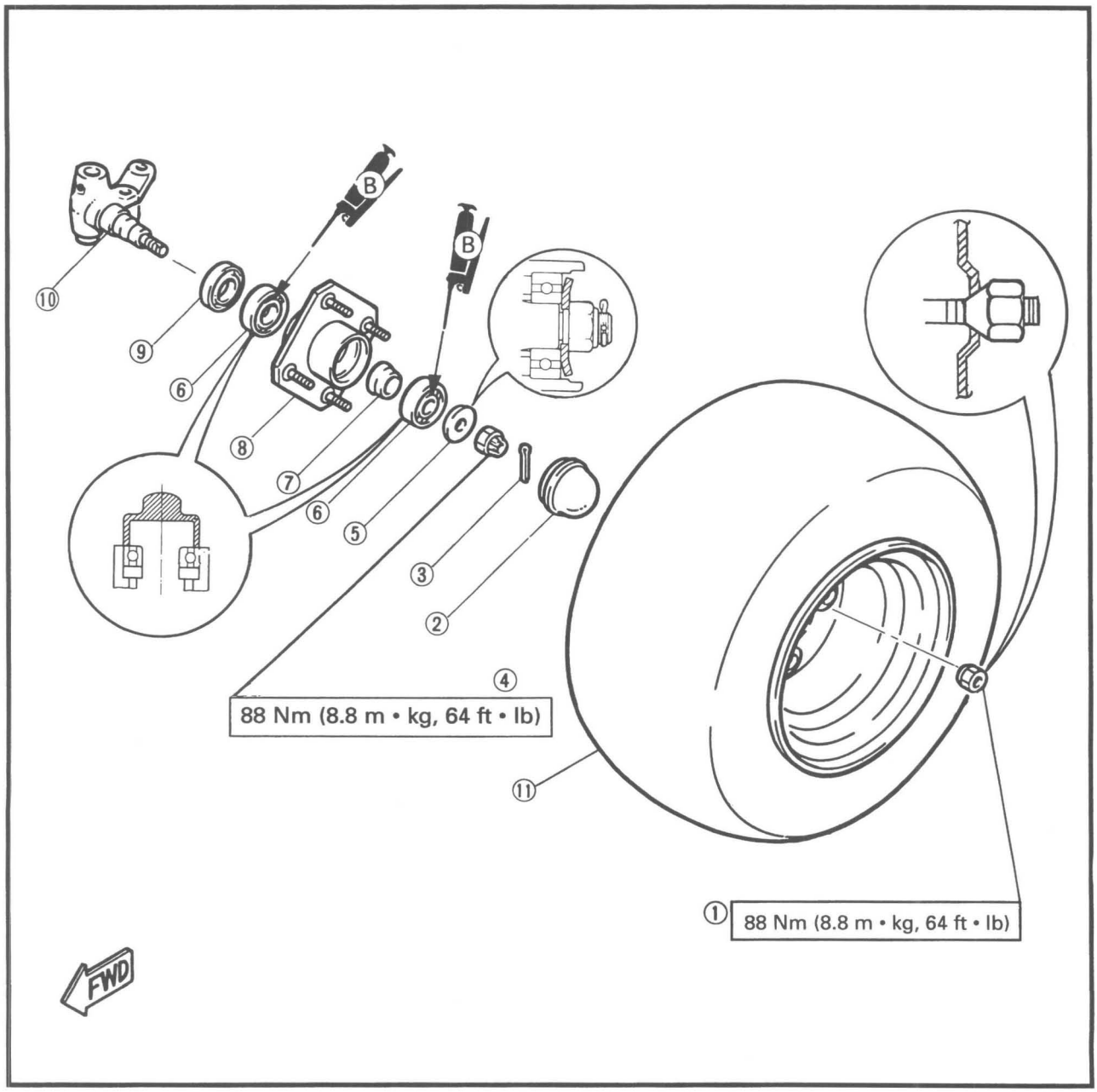

REMOVAL

1. Place the vehicle on a level surface.
2. Apply parking brake.
3. Loosen:
   - Nuts (Front wheel)
4. Jack up the front wheels by placing a suitable stand under the frame.
5. Remove:
   - Nuts (Front wheel)
   - Front wheel

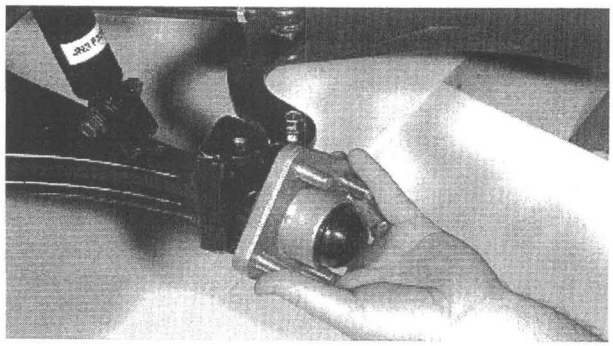

Y-260

6. Check:
   - Movement (Wheel bearing)
     Rotate the hub by hand.
     Roughness → Replace bearing.

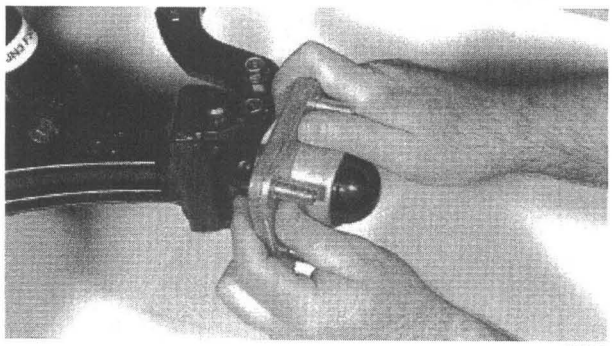

Y-261

7. Check:
   - Free play (Wheel bearing)
     Gently rock the hub back and forth.
     Looseness/noticeable free play → Retighten the hub nut.
     Still play → Replace bearing.

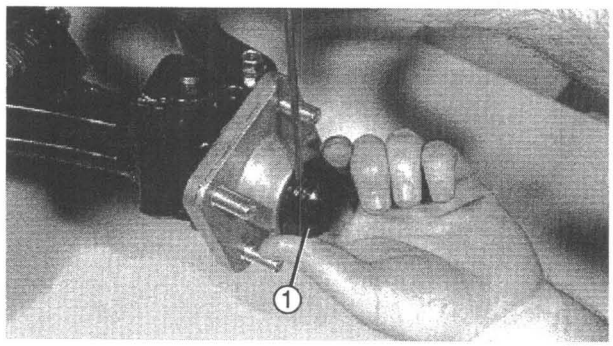

Y-262

8. Remove:
   - Dust cover ①

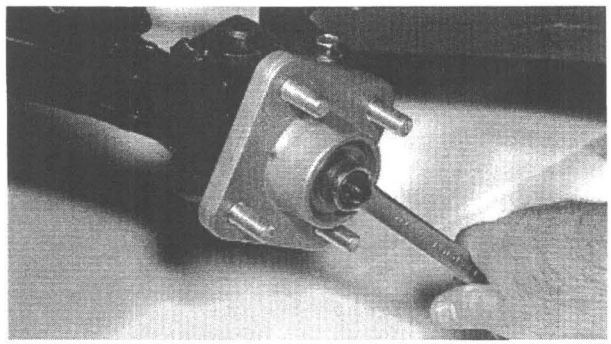

Y-263

9. Remove:
   - Cotter pin
   - Hub nut
   - Conical washer

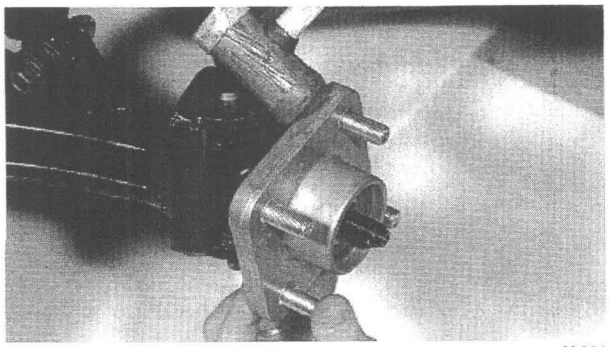

Y-264

10. Remove:
    - Hub (Front wheel)
      Tap the hub out using a soft hammer.

INSPECTION

1. Inspect:
   - Wheel
     Cracks/Bends/Warpage → Replace.

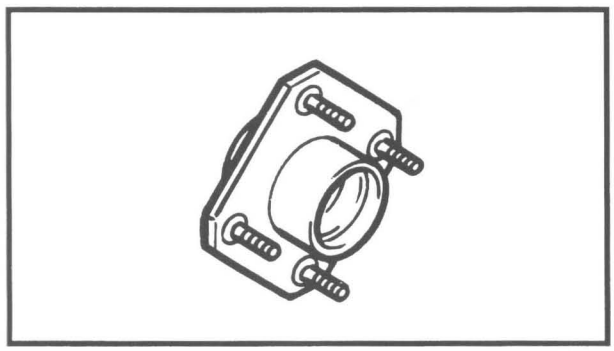

2. Inspect:
   - Wheel hub
     Cracks/Damage → Replace.

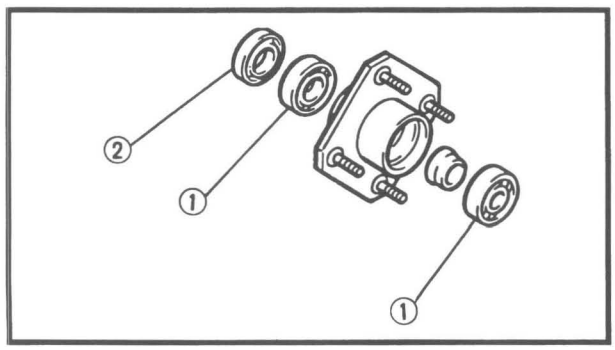

3. Inspect:
   - Bearings (Wheel hub) ①
     Bearings allow play in the wheel hub or the wheel turns roughly → Replace.
   - Oil seal ②
     Wear/Damage → Replace.

Wheel bearing and oil seal replacement steps:
- Clean the inside of the wheel hub.
- Remove the oil seal and the bearing using a general bearing puller.
- Install the new bearing and oil seal by reversing the previous steps.

NOTE:
Use a socket ① that matches the outside diameter of the race of the bearing and oil seal.

CAUTION
Do not strike the center race ② or balls ③ of the bearing. Contact should be made only with the outer race ④.

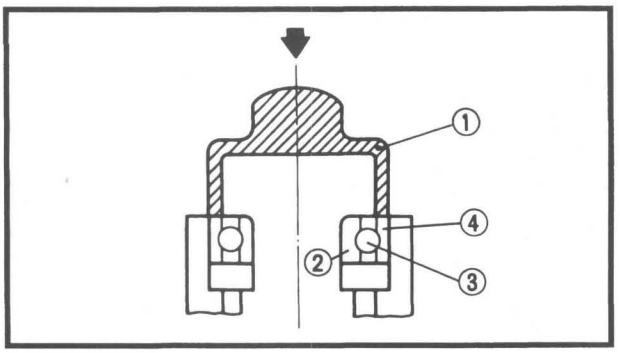

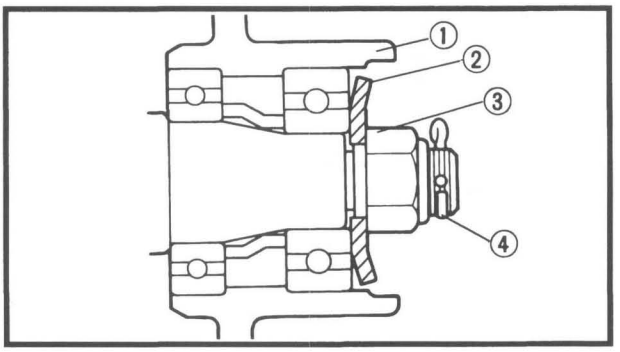

INSTALLATION

Reverse the "REMOVAL" procedure.
Note the following points.

1. Install:
   - Hub ①
   - Conical washer ②
   - Hub nut ③

NOTE:
Install the conical washer ② with the tapered side facing inward.

Hub Nut ③ :
92 Nm 9.2 m • kg, 66 ft • lb)

2. Install:
   - Cotter pin ④ (New)
   - Dust cover

WARNING
Always use a new cotter pin.

3. Install:
   - Front wheel

Nut (Front Wheel):
88 Nm 8.8 m • kg, 64 ft • lb)

REAR AXLE WHEEL (G14-A)

① Rear axle
② Axle housing right
③ Axle housing left
④ Brake drum
⑤ Axle bearing
⑥ Bearing cover

A	TIRE SIZE: 18 x 8.50-8.00/4PR
B	TIRE TYPE: TUBELESS (Sawtooth tread pattern)
C	TIRE PRESSURE: 108 kPa (1.1 kgf/cm^2, 16 psi)
D	WEAR LIMIT: 1.0mm (0.04 in)

E	RIM SIZE: 7.00-I-8.00
F	WHEEL ALIGNMENT:
G	Toe-in: Zero mm (Zero in)
H	Camber: Zero deg (non-adjustable)
I	REAR AXLE RUNOUT: Limit: 0.30 mm (0.012 in)
J	AXLE FLANGE DEFLECTION: Limit: 0.15 mm (0.006 in)

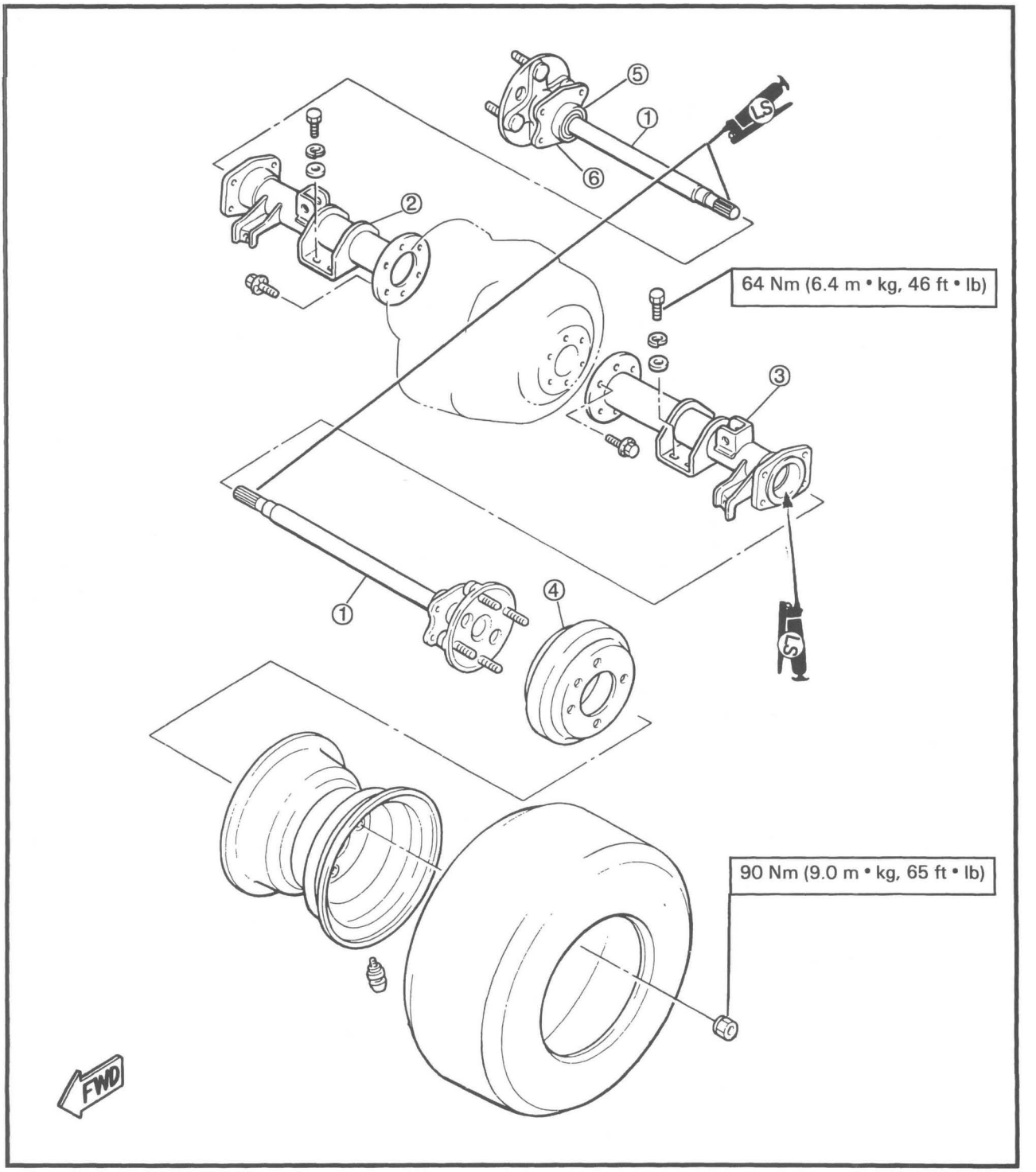

REMOVAL

1. Place the vehicle on a level surface.
2. Apply parking brake and block the front wheels.
3. Loosen:
   - Nuts (Rear wheel)
4. Jack up the rear wheels by placing a suitable stand under the frame.
5. Remove:
   - Nuts (Rear wheel)
   - Rear wheel
6. Release parking brake by depressing the accelerator pedal.
7. Remove:
   - Brake drum ①
     To loosen the drum, screw *bolts* ② into the drum as shown.

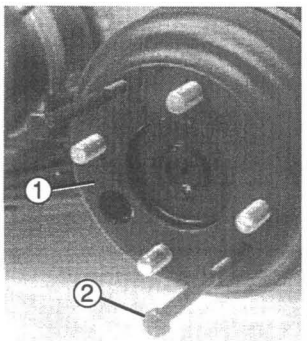

Y-230

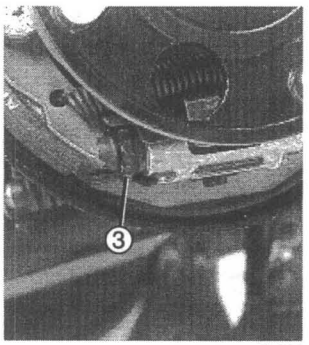

Y-231

NOTE:
If it is very hard to remove the drum, screw in the adjusting nut ③ in the shoe plate.

8. Remove:
   - Cotter pin ①
   - Clevis pin ②
   - Brake cable

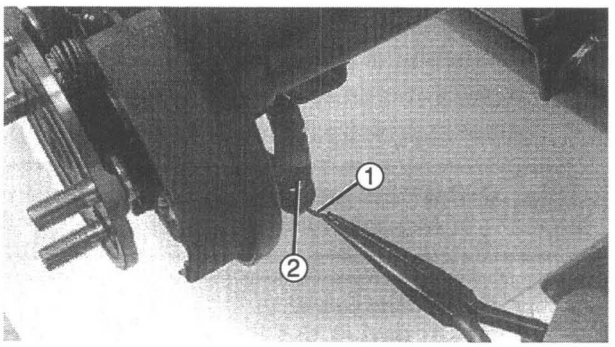

Y-265

9. Remove:
   - Bolts (shoe plate)
     Align the holes of the axle flange with the bolts to loosen.

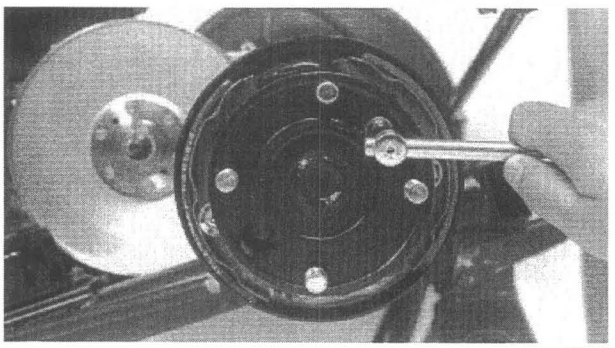
Y-266

10. Remove:
    - Rear axle
    - Brake assembly

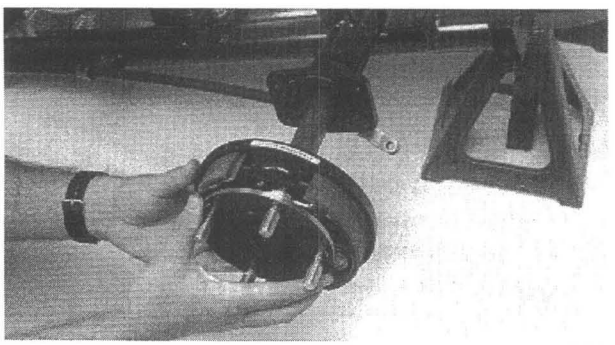
Y-267

INSPECTION

1. Inspect:
   - Wheel
   - Cracks/Bends/Warpage → Replace.

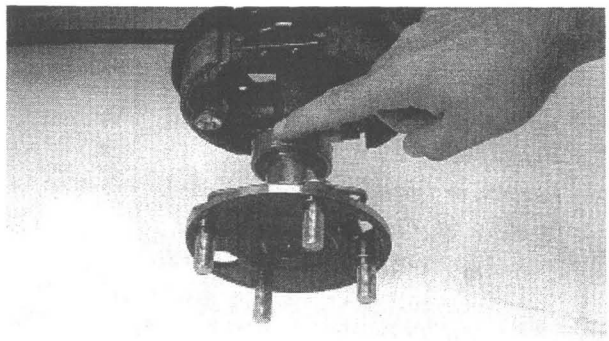

Y-268

2. Inspect:
   - Axle bearing movement
     Rotate bearing by finger.
     Roughness/Wear → Replace rear axle.

NOTE:

The axle bearing cannot be removed from the rear axle.

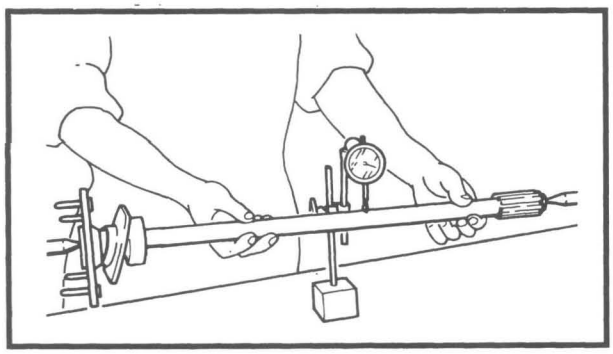

3. Measure:
   - Axle shaft runout
     Use a centering device and the Dial Gauge.
     Out of specification → Replace.

	Dial Gauge: **YU-03097, 90890-03097**
	Runout Limit: **0.30 mm (0.012 in)**

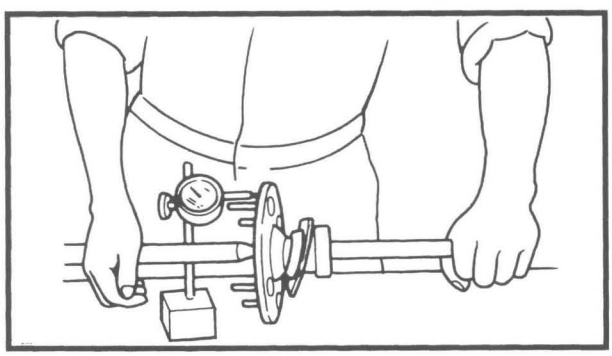

4. Measure:
   - Axle flange deflection
     Use a centering device and the Dial Gauge.
     Out of specification → Replace.

	Dial Gauge: **YU-03097, 90890-03097**
	Deflection Limit: **0.15 mm (0.006 in)**

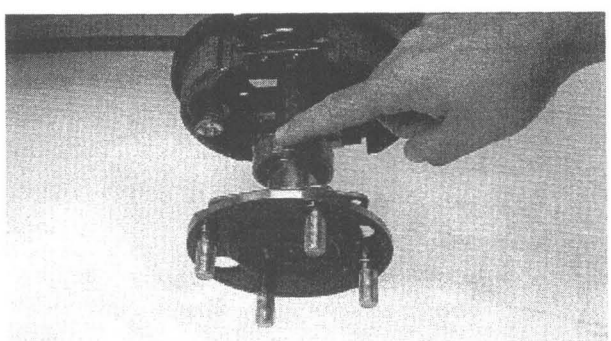

Y-268

INSTALLATION

Reverse the "REMOVAL" procedure.
Note the following points.

1. Lubricate:
   - Bearing outer surface

	Lightweight Lithium Soap Base Grease

2. Install:
   - Rear axle

	**Bolts (Shoe Plate):** **30 Nm (3.0 m • kg, 22 ft • lb)**

3. Install:
   - Brake drum
   - Rear wheel

	**Nut (Rear Wheel):** **90 Nm (9.0 m • kg, 65 ft • lb)**

REAR AXLE WHEEL (G14-E)

① Rear axle shaft
② Brake drum
③ Bearing
④ Rear axle hub
⑤ Circlip

A	TIRE SIZE: 18 x 8.50-8.00/4PR
B	TIRE TYPE: TUBELESS (Sawtooth)
C	TIRE PRESSURE: 137 kPa (1.4 kgf/20 psi)
D	WEAR LIMIT: 1.0 mm (0.04 in)
E	RIM SIZE: 7.00-I-8.00

F	WHEEL ALIGNMENT:
G	Toe-in: Zero mm (Zero in)
H	Camber: Zero deg (non-adjustable)
I	REAR AXLE RUNOUT: Limit: 0.30 mm (0.012 in)
J	AXLE FLANGE DEFLECTION: Limit: 0.15 mm (0.006 in)

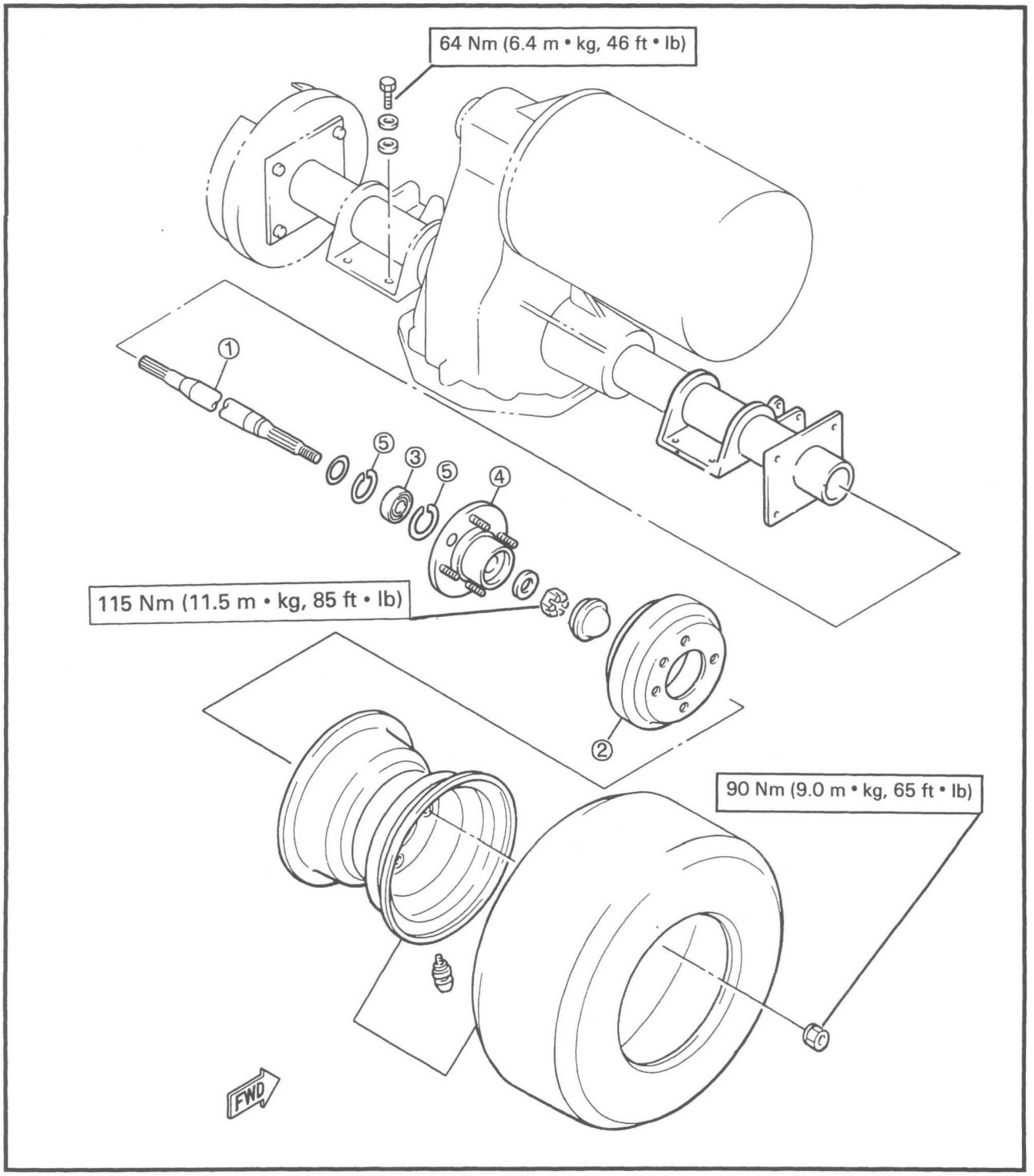

REMOVAL

1. Place the vehicle on a level surface.
2. Apply parking brake.
3. Loosen:
   - Nuts (Rear wheel)
4. Jack up the rear wheels by placing a suitable stand under the frame.
   Block the front wheels.
5. Remove:
   - Nuts (Rear wheel)
   - Rear wheels
6. Release parking brake by depressing the accelerator pedal.
7. Remove:
   - Brake drum ①
     To loosen the drum, screw bolts ② into the drum as shown.

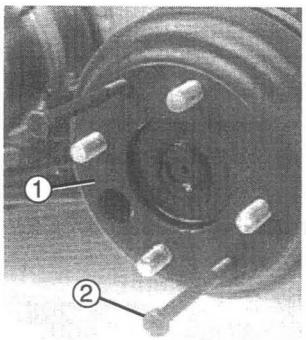

Y-230

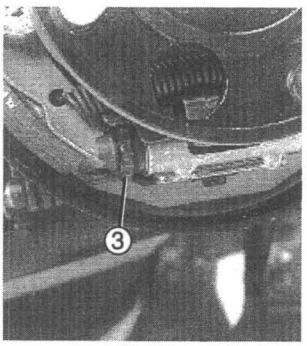

Y-231

NOTE:
If it is very hard to remove the drum, screw in the adjusting nut ③ in the shoe plate.

8. Remove:
   - Cotter pin ①
   - Clevis pin ②
   - Brake cable

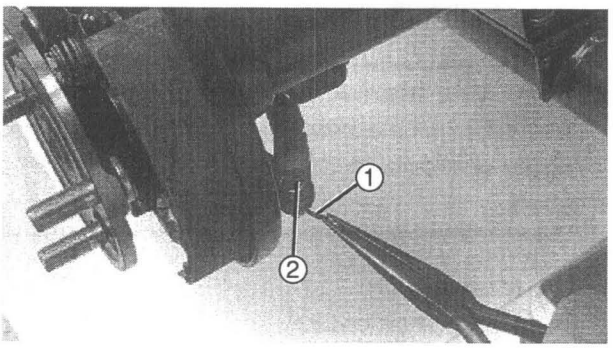

Y-265

9. Remove:
   - Plastic hub cap ①
   - Cotter pin ②
   - Nut ③
   - Washer ④
   - Rear axle hub ⑤

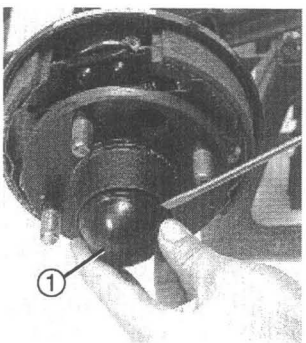

Y-269

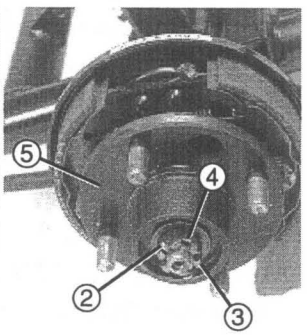

Y-270

10. Remove:
    - Bolts ①
    - Brake assembly ②

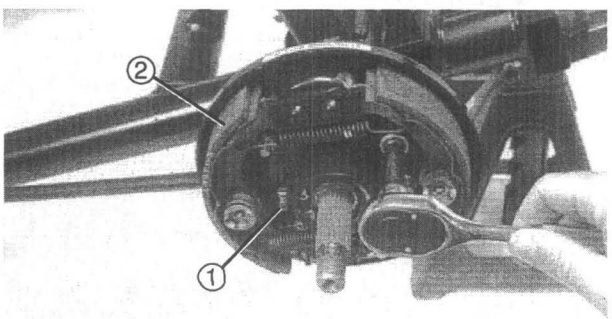

Y-271

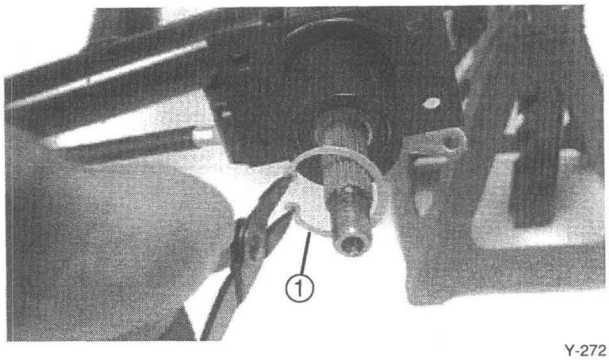

Y-272

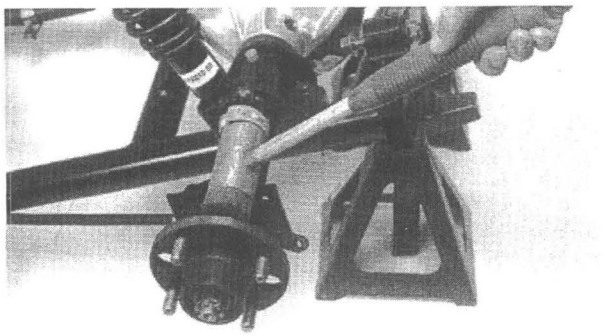

Y-273

11. Remove:
    - Circlip ①
      From axle housing
12. Remove:
    - Rear axle shaft with bearing

NOTE:
To remove the rear axle shaft, first install the rear axle hub and nut back onto the axle. Then remove the axle shaft by tapping the back of the hub with a soft hammer as shown.

INSPECTION

1. Inspect:
   - Wheel
     Cracks/Bends/Warpage → Replace.
2. Inspect:
   - Axle bearing movement
     Rotate bearing.
     Roughness/Wear → Replace.

NOTE:
To remove bearing from axle shaft, support the inner race of the bearing on an arbor press, and apply pressure to the threaded end of the axle shaft.

3. Measure:
   - Axle shaft runout
   - Axle flange deflection
     See instructions for G14-A axle on page 3-18.

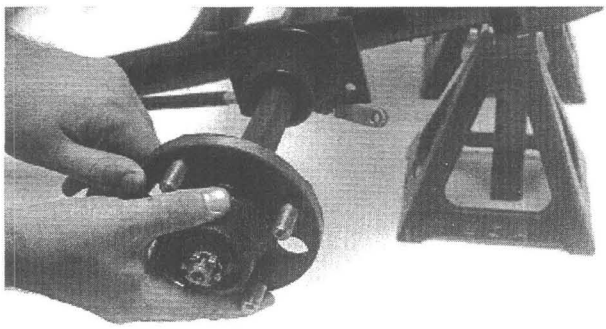

Y-274

INSTALLATION

Reverse the "REMOVAL" procedure.
Note the following points:

1. Lubricate
   - Bearing outer surface

	Lightweight Lithium Soap Base Grease

   - Hub nut threads with an anti-seize lubricant.

	Rear hub nut G14-E 115 Nm (11.5 m • kg, 85 ft • lb)

BRAKE

① Brake shoe plate
② Brake shoes
③ Repair parts kit
④ Dust cover
⑤ Bolt
⑥ Washer

A	BRAKE SHOE LINING THICKNESS: Standard: 4.0 mm (0.16 in) Limit: 0.75 mm (0.029 in)
B	BRAKE DRUM INSIDE DIAMETER: Standard: 160 mm (6.30 in) Limit: 161 mm (6.34 in)

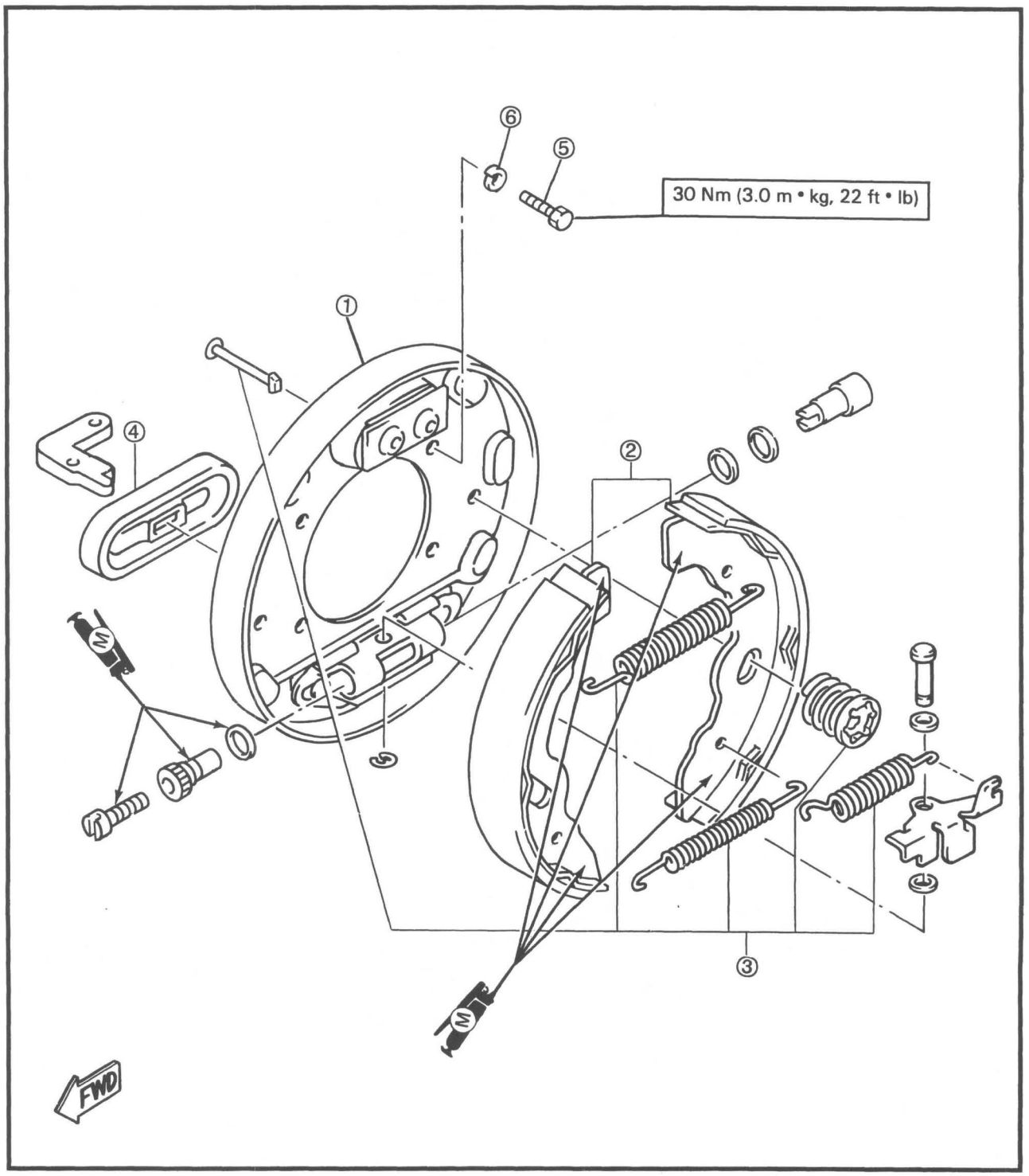

BRAKE PEDAL

① Brake pedal
② Parking brake pedal
③ Parking brake ratchet
④ Brake arm
⑤ Parking brake rod
⑥ Rachet stopper
⑦ Brake equalizer
⑧ Brake cable
⑨ Brake arm
⑩ Collar
⑪ Bushing

A	BRAKE PEDAL FREE PLAY: 25 ~ 30 mm (0.98 ~ 1.18 in)

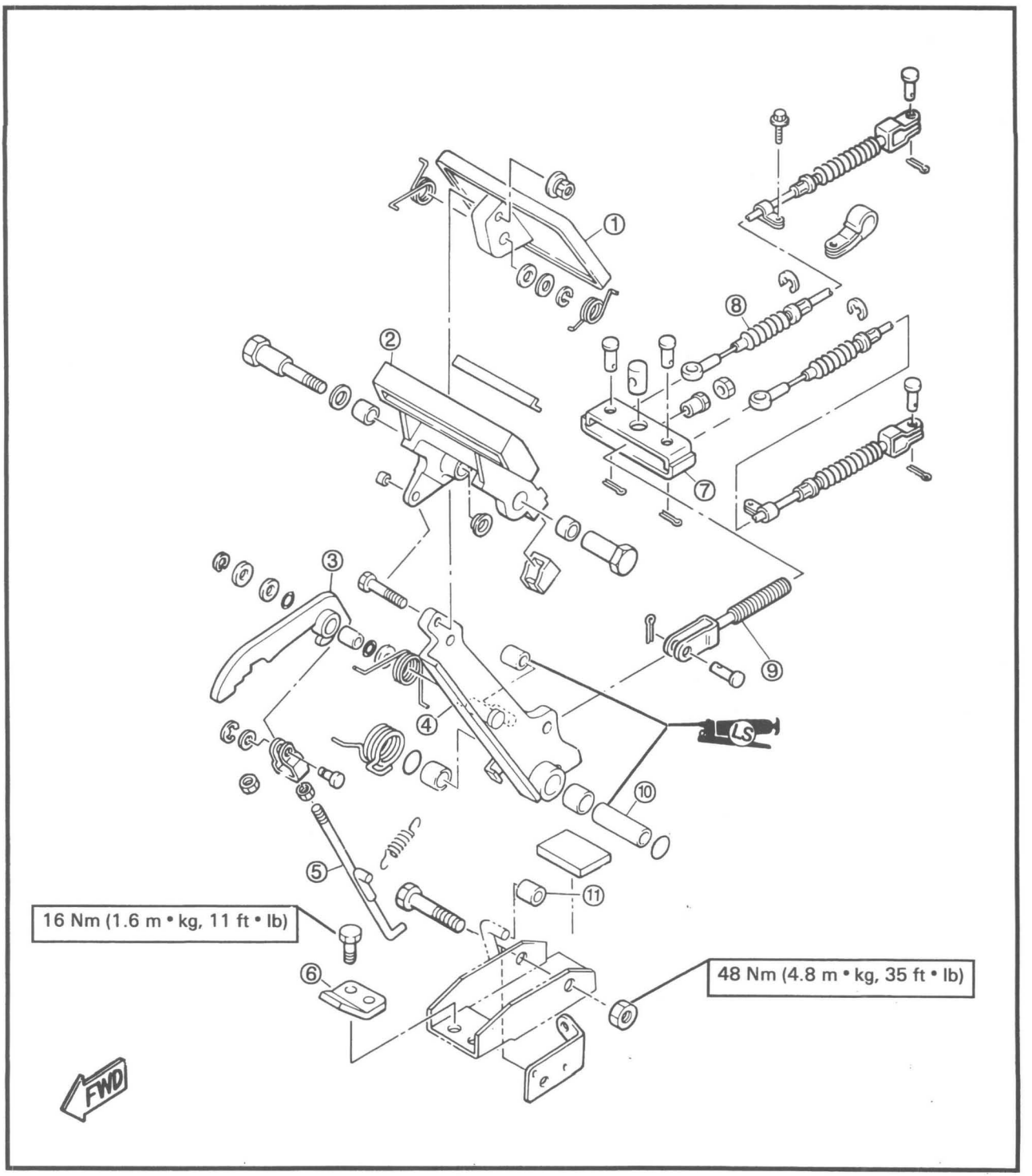

DISASSEMBLY

1. Remove:
   - Rear wheel
   - Brake drum

   For G14-A:
   - Rear axle (through step 10 of Rear Axle Wheel for G14-A - Removal section.)

   For G14-E:
   - Rear axle hub (through step 9 of Rear Axle Wheel for G14-E - Removal section.)

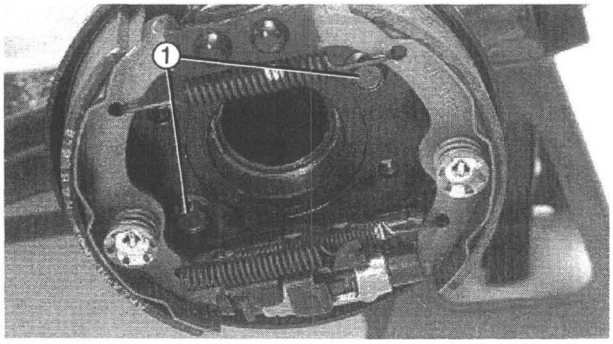

Y-275

2. Hold the brake shoe plate using two shoe plate bolts ① (G14-A).

NOTE:

Step 2 above is not necessary for G14-E. The brake shoe plate for G14-E remains in place after the rear axle hub is removed.

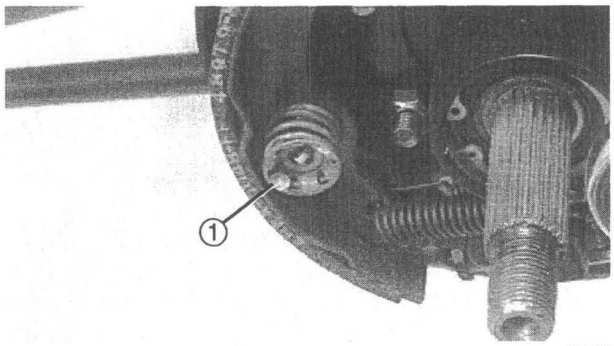

Y-276

3. Remove:
   - Shoe clamp springs ①

   While depressing the spring ① with a spring removal tool or pliers, turn it to align the spring slot with the pin head.

4. Remove:
   - Brake shoes (with tension springs)

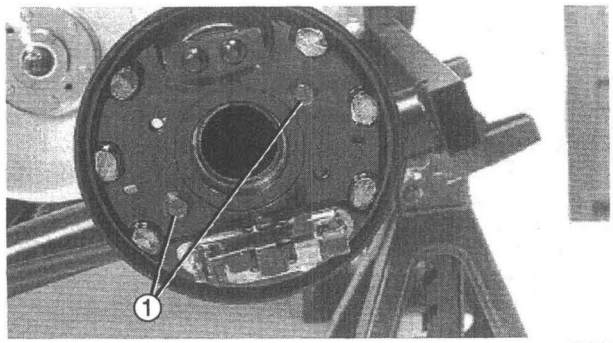

Y-277

5. Remove:
   - Bolts ①

INSPECTION

Brake Shoe and Brake Drum

Refer to CHAPTER 2 "SHOE LINING INSPECTION" section.

CAUTION

Right and left side brake shoe sets are not interchangeable. If more than one set is to be removed at a time, mark sets so they can be installed in their original positions.

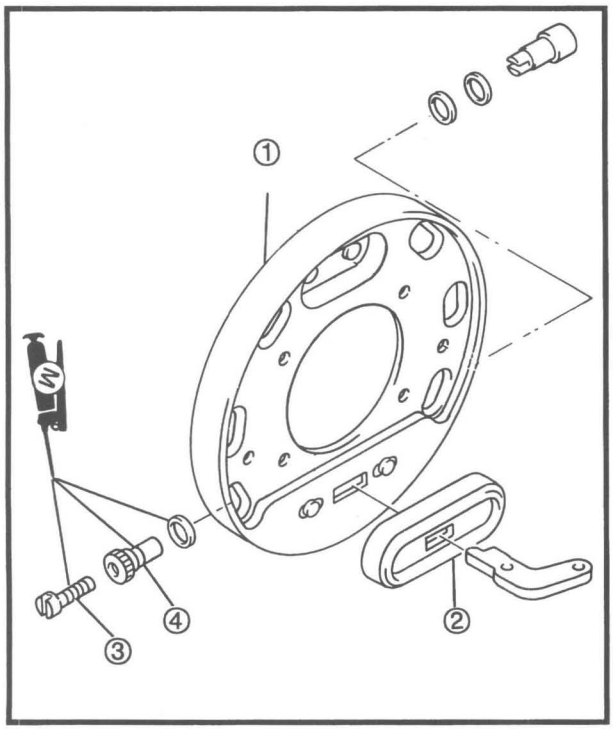

Brake Shoe Plate

1. Inspect:
   - Brake shoe plate ①
     Bends/Cracks/Damage → Replace.
2. Inspect:
   - Dust cover ②
     Cracks/Wear → Replace.
3. Check:
   - Lever holder
     Unsmooth movement → Lubricate with high temperature grease.
4. Turn the adjusting bolt ③ in completely by hand. Do not tighten it so that movement is not free. This bolt must rotate freely.

NOTE:

Lubricate the adjusting bolt with high temperature grease.

④ Adjusting nut

Brake Pedal

1. Check:
   - Pedal movement
   - Side free play

   Refer to CHAPTER 2 "BRAKE AND ACCELERATOR PEDALS INSPECTION" section.

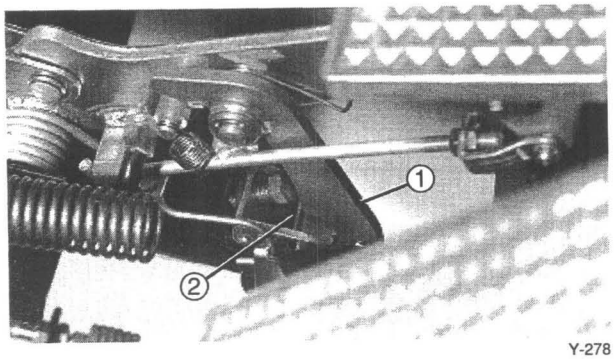

Y-278

2. Inspect:
   - Parking brake ratchet ①
   - Ratchet stopper ②

   Wear/Damage → Replace.

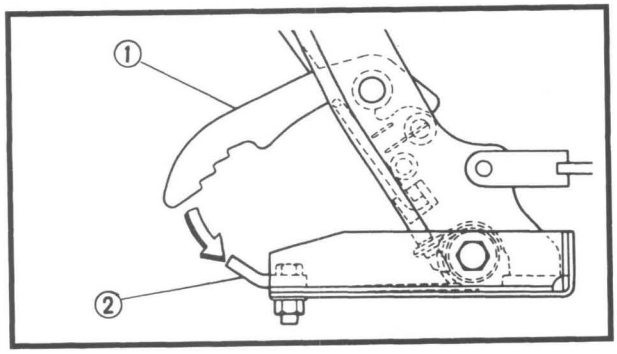

ASSEMBLY

Reverse the "DISASSEMBLY" procedure.
Note the following points.

Brake Shoe

1. Install:
   - Shoe plate
   - Brake shoes

CAUTION

Reused right and left side brake shoe sets must be installed in their original positions (as marked at removal).
Replacement right and left side brake shoe sets are stamped "R.H. SIDE" (passenger side) and "L.H. SIDE" (driver side), respectively
Always replace the shoes as a set, and use care to install shoe sets in their proper locations - shoe sets are not interchangeable.

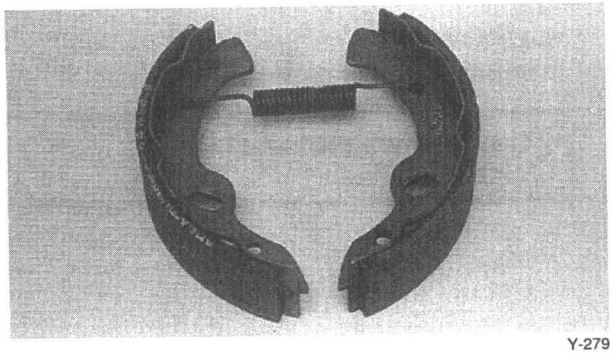
Y-279

Brake shoe assembly steps:

- Apply a light coat of high temperature grease to each end of both brake shoes.

⚠ WARNING

Keep hands clean while handling brake shoes. Be sure that no grease gets on the lining surface.

- Hook the upper spring (larger) onto the shoes.
- Install the shoes onto the shoe plate.

CAUTION

Align the shoe end with slot of the adjusting bolt head.

- Install the clamp springs.
- Install the lower springs (smaller) onto the shoes.
- Lightly polish the new lining surfaces with emery cloth.

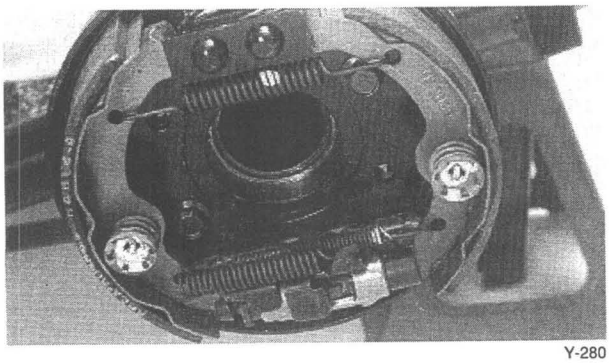

Y-280

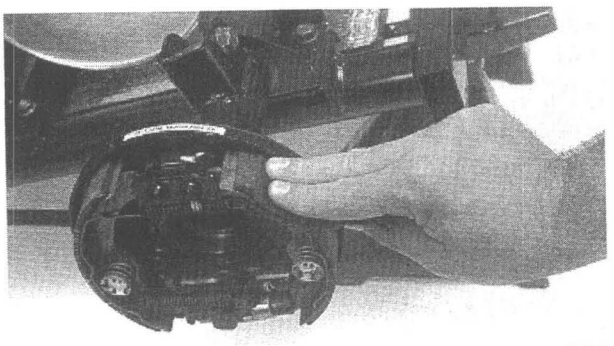

Y-281

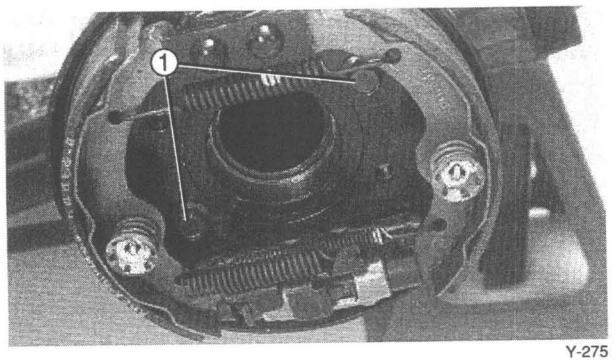

Y-275

3. Remove:
   - Bolts ① (G14-A only)

NOTE:

For G14-E, the shoe plate bolts can remain in place while completing the rear wheel hub installation.

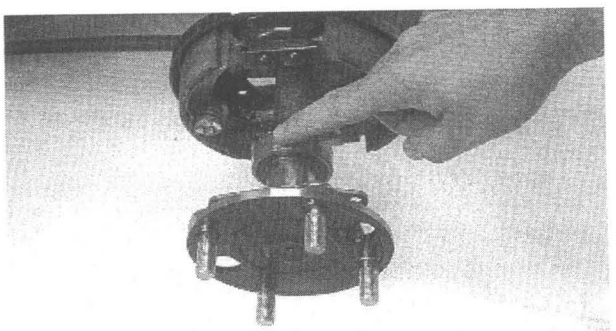

Y-268

4. Lubricate:
   - Bearing outer surface (G14-A)

Lightweight Lithium Soap Base Grease

5. Install:
   - Rear axle, G14-A/Rear wheel hub, G14-E
   - Brake drum
   - Rear wheel

   Refer to "REAR AXLE WHEEL – INSTALLATION" section.

Bolt (Shoe Plate) G14-A:
30 Nm (3.0 m • kg, 22 ft • lb)

6. Adjust:
   - Freeplay (Brake cable)

   Refer to CHAPTER 2 "BRAKE CABLE INSPECTION" section.

Freeplay (Brake cable):
25 ~ 30 mm (0.98 ~ 1.18 in)

7. Adjust:
   - Free play (Release timing)

   Refer to CHAPTER 2 "PARKING BRAKE ADJUSTMENT" section.

Free Play (Release Timing):
1.0 mm (0.04 in)

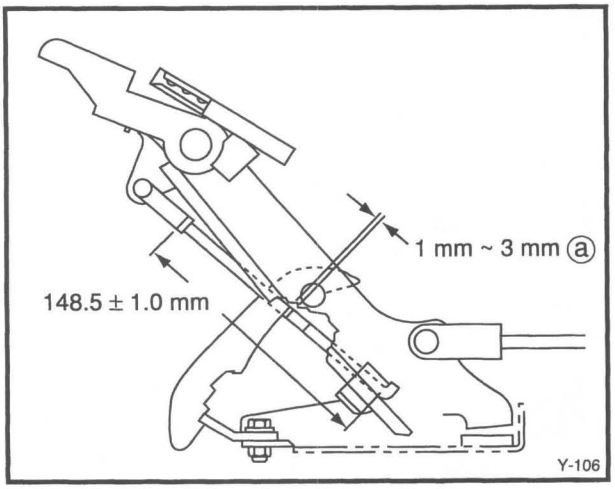

8. Adjust:
   - Parking rod length (Parking brake pedal) ⓐ

Parking Rod Length
148.5 ± 1 mm (5.85 ± 0.04 in)

Rod length adjustment step:
- Engage first notch of parking brake.
- Check clearance A.

A: 1 mm ~ 3 mm

- Adjust length of parking rod by loosening the locknut and turning the adjuster nut as required.

ACCELERATOR PEDAL

FOR G14-A

① Accelerator pedal
② Pedal cover
③ Pedal bracket
④ Pedal shaft
⑤ Accelerator arm
⑥ Throttle cable
⑦ Bushing
⑧ O-ring
⑨ Spring pin
⑩ Tension spring

A	* ACCELERATOR PEDAL POSITION ADJUSTING BOLT HEIGHT ⓐ:	
	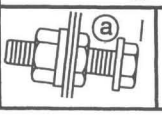	18.00 ~18.40 mm (0.708 ~ 0.720 in)

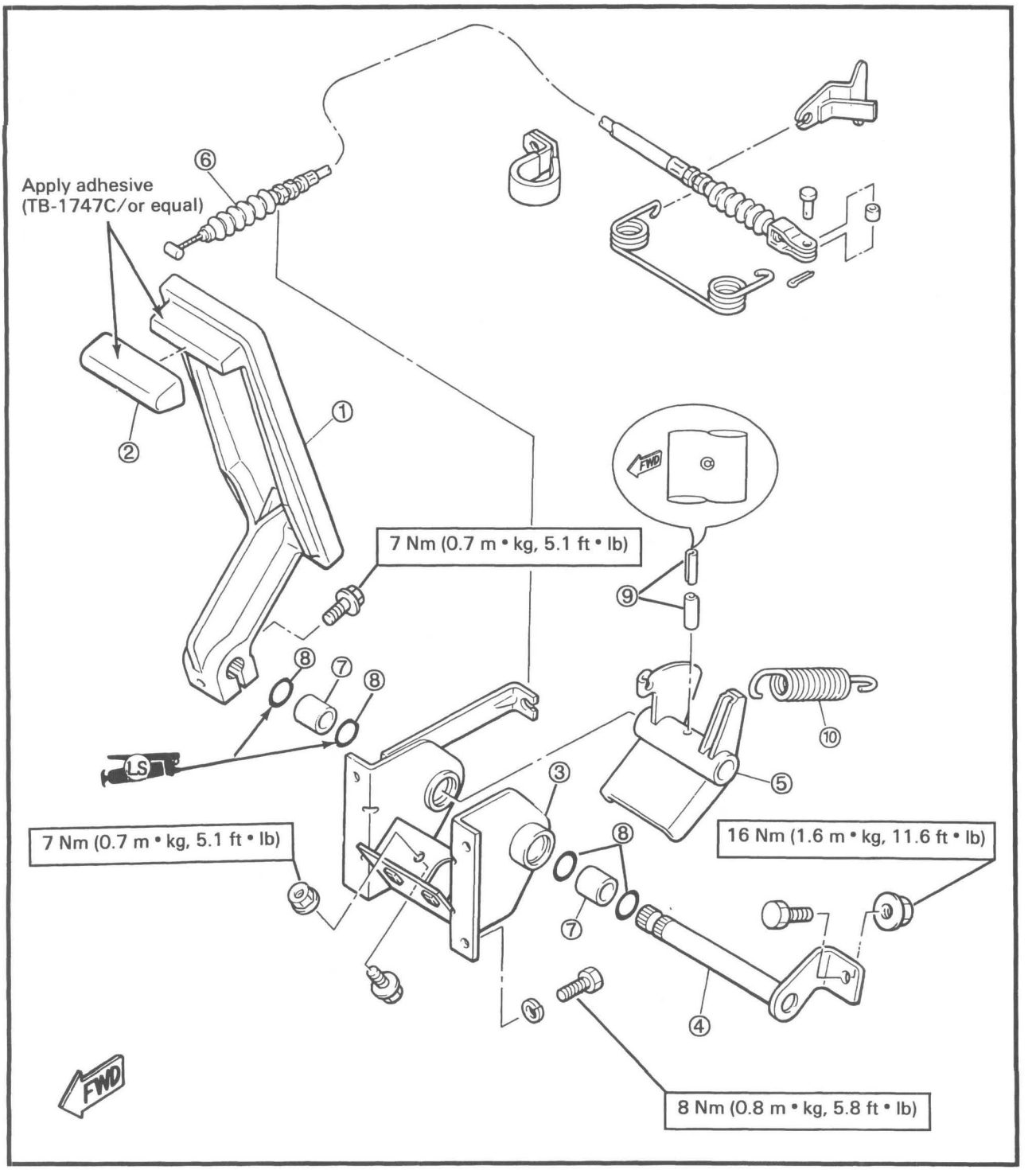

FOR G14-E

① Accelerator pedal
② Pedal cover
③ Crank pedal lever
④ Pedal bracket
⑤ Pedal shaft
⑥ Accelerator arm
⑦ Spring pin
⑧ Tension spring
⑨ Bushing
⑩ O-ring

A	* ACCELERATOR PEDAL POSITION ADJUSTING BOLT HEIGHT ⓐ:	
	ⓐ	18.00 ~18.40 mm (0.708 ~ 0.720 in)

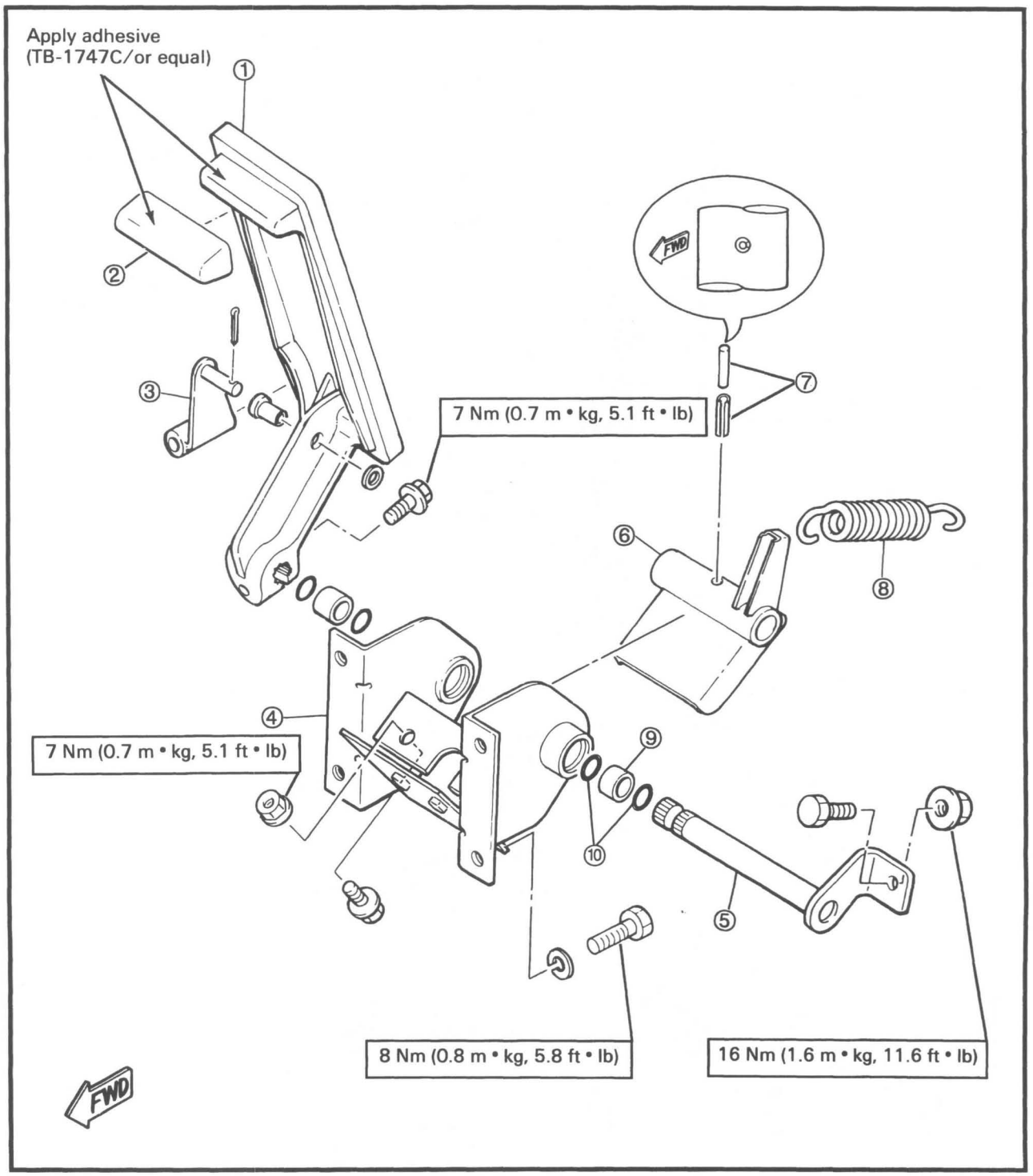

STEERING SYSTEM

① Steering wheel
② Steering gearbox
③ Oil seal
④ Idler arm
⑤ Lock washer
⑥ Tie rod end
⑦ Tie rod
⑧ Bearing
⑨ Steering shaft
⑩ Bearing
⑪ Steering shaft adjusting bolt
⑫ O-ring
⑬ Locknut
⑭ Pitman shaft adjusting bolt
⑮ Gear box cover
⑯ Gasket
⑰ Pitman arm

A	Lithium Soap base grease Steering gearbox 90 cc (3.17 Imp oz, 3.04 US oz)

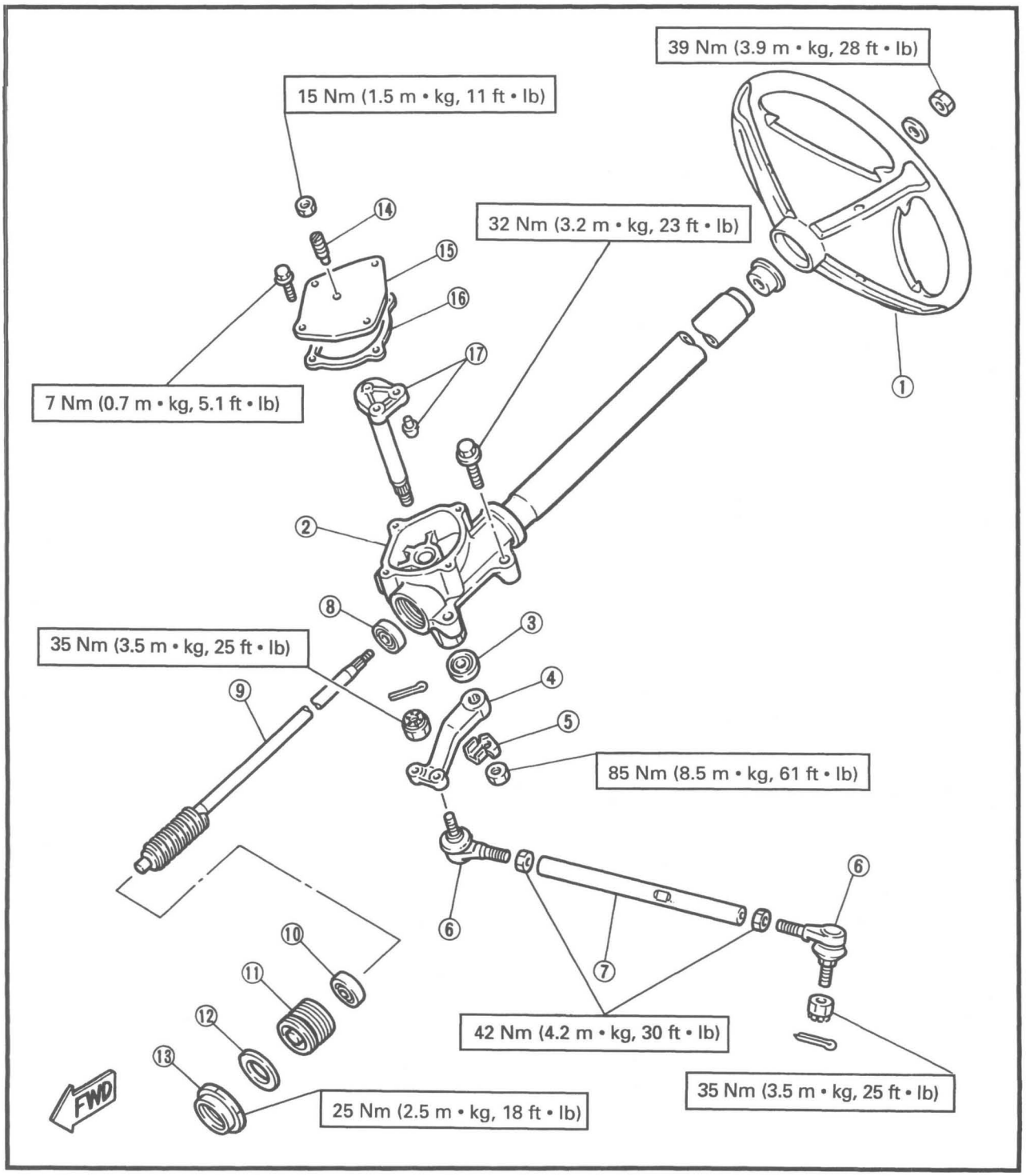

REMOVAL

1. Place the vehicle on a level surface.
2. Apply parking brake.
3. Jack up the front wheels by placing a suitable stand under the frame.

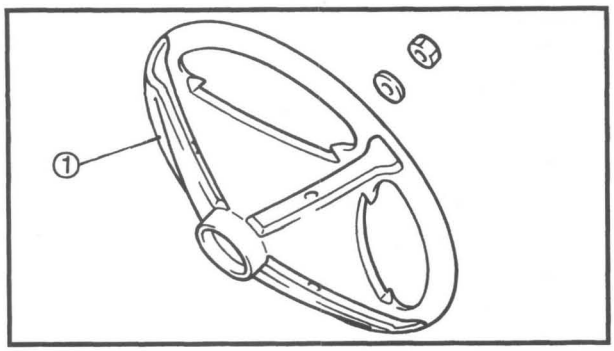

4. Remove:
   - Scorecard holder
   - Steering wheel nut
   - Washer
   - Steering wheel ①

NOTE:
The score card holder is removed by pressing its mounting pins from the back of the steering wheel.

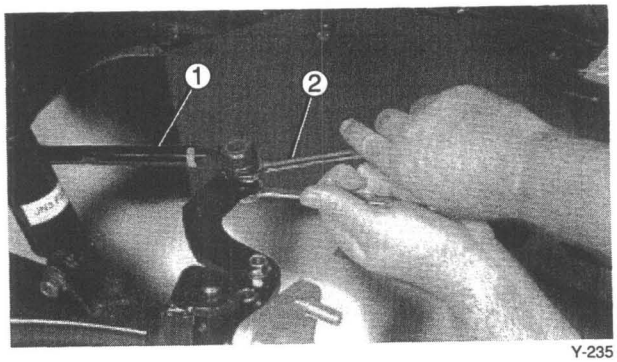

Y-235

5. Remove:
   - Cotter pin
   - Locknut
   - Tie rod ①

NOTE:
When removing the locknut, hold the rod end using a 14 mm (0.6 in) wrench ②.

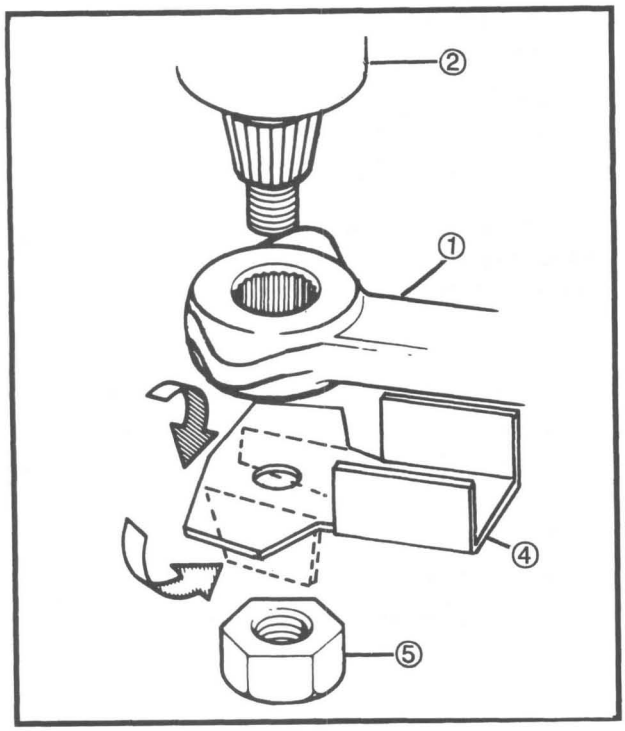

6. Bend:
   - Lock washer tab
7. Remove:
   - Locknut ⑤
   - Lock washer ④
8. Disconnect:
   - Idler arm ①
     From the pitman shaft ②.
     Use a two-jaw universal puller.

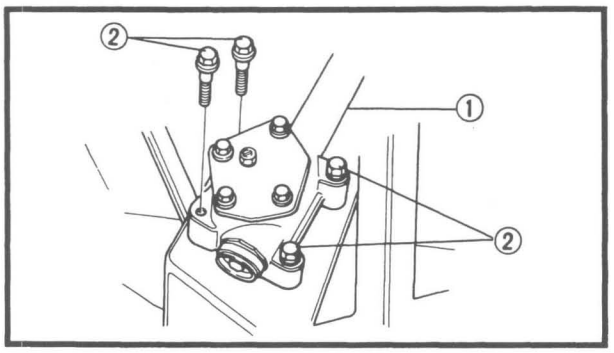

9. Remove:
   - Bolts ②
   - Steering gearbox assembly ①

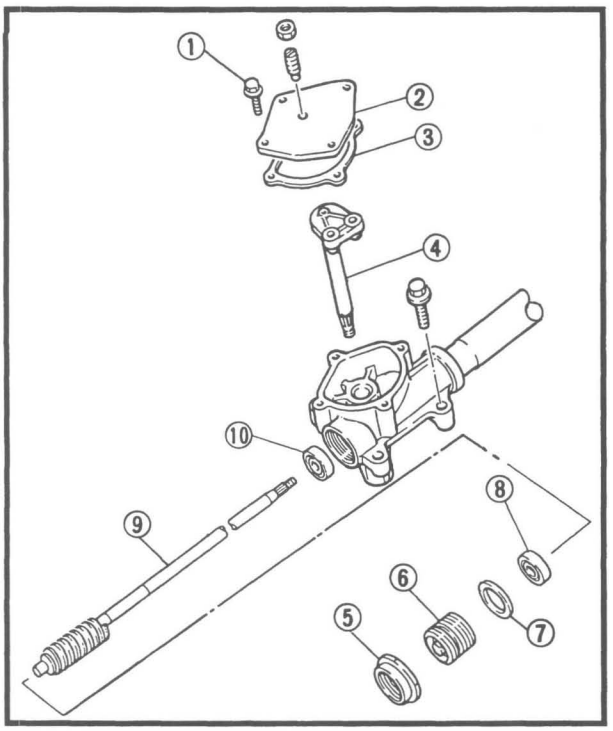

DISASSEMBLY

1. Remove:
   - Bolts ①
   - Gearbox cover ②
   - Gasket ③
   - Pitman arm ④
   - Locknut ⑤
   - Steering shaft adjusting bolt ⑥ (with O-ring ⑦)
   - Bearing (Lower) ⑧
   - Steering shaft ⑨
   - Bearing (Upper) ⑩

INSPECTION

1. Inspect:
   - Steering shaft bearings ⑧ ⑩
   - Bearing outer races
     Pitting/Damage → Replace.

NOTE:

Always replace the bearing and race as a set.

2. Inspect:
   - Steering worm gear
     Wear/Scratches/Damage → Replace steering shaft.
3. Inspect:
   - Pitman arm pins
     Wear/Damage → Replace.

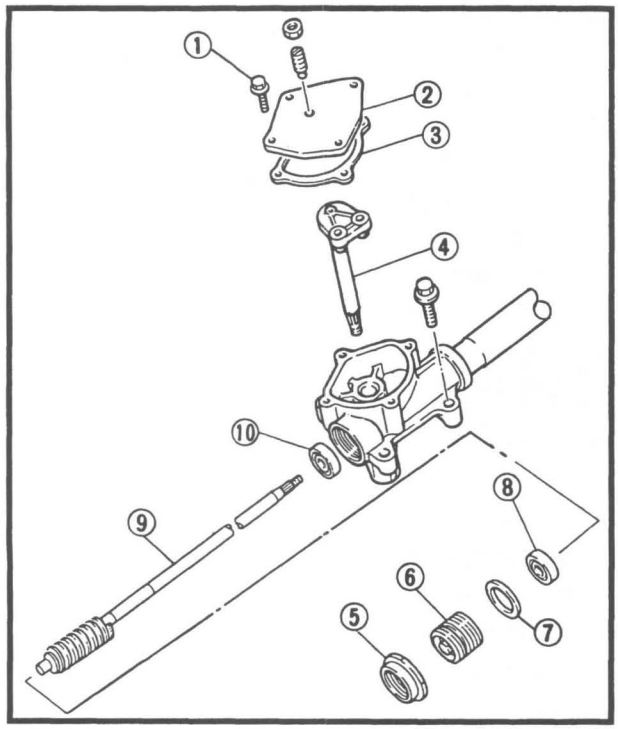

4. Inspect:
   - Upper bushing (not shown)
   - Steering shaft ⑨
   - Wear/Damage → Replace.

5. Inspect:
   - Pitman arm shaft ④
     Wear/Damage → Replace.

6. Inspect:
   - Gasket ③ (Gearbox cover ②)
     Cracks/Damage → Replace.
7. Inspect:
   - O-ring ⑦ (Locknut ⑤)
     Wear/Damage → Replace.

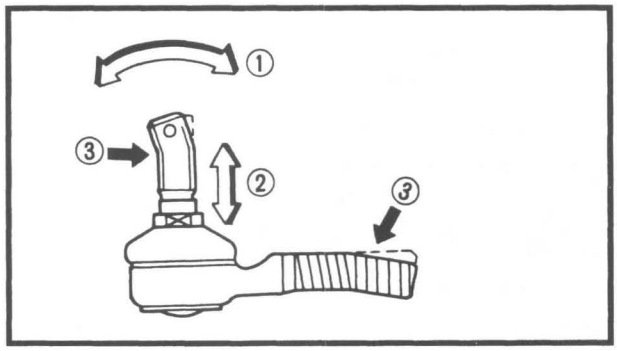

8. Inspect:
   - Rod end
     Unsmooth movement ① → Replace.
     Noticeable free play ② → Replace.
     Bolt bent ③ → Replace.

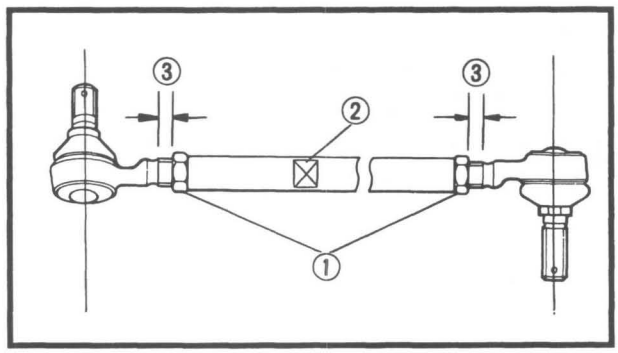

NOTE:
- When loosening or tightening the locknuts ①, hold the tie-rod at a flat section ② with a wrench.
- The length of the threads ③ of both rod ends must be same.

Locknut (Rod End):
42 Nm (4.2 m • kg, 30 ft • lb)

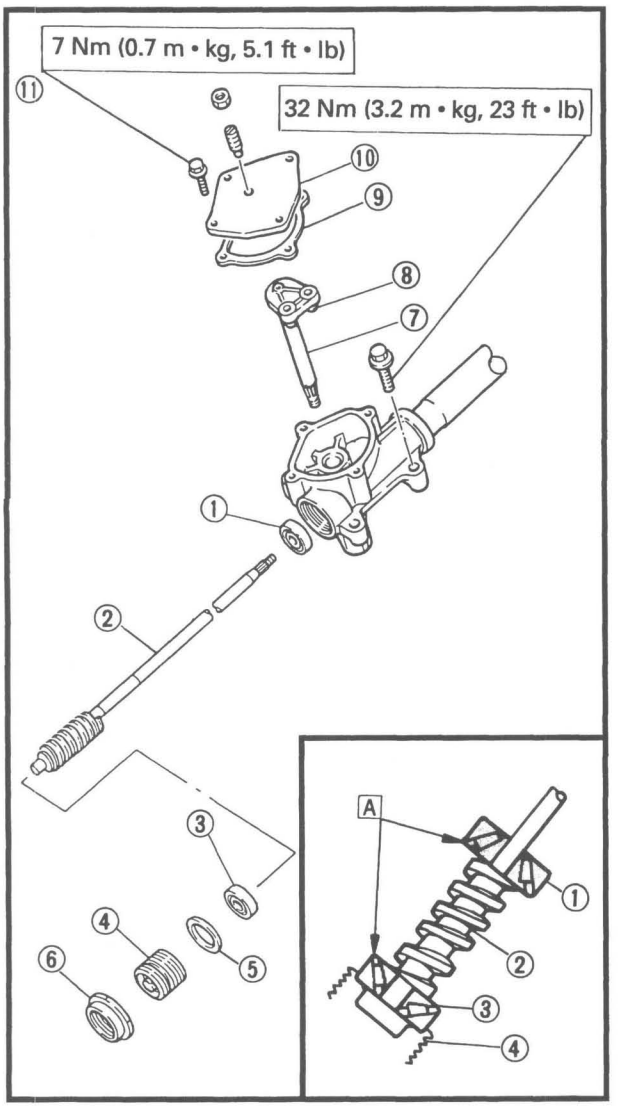

ASSEMBLY

Reverse the "DISASSEMBLY" procedure.

Note the following points:

1. Lubricate:
   - Bearings
   - Worm gear
   - Pitman arm shaft
   - Oil seal lip
   - Upper bushing (not shown).

Lithium Soap Base Grease
Lightly Coat

2. Install:
   - Bearing (Upper) ①
   - Steering shaft ②
   - Bearing (Lower) ③
   - Adjusting bolt ④ (with O-ring ⑤)
   - Locknut ⑥

NOTE:

Be sure that the bearings are installed in the correct direction [A] .

3. Add grease to the gearbox

Gearbox Grease:
Multi type grease
90 cc (3.17 Imp oz, 3.04 US oz)

4. Install:
   - Pitman arm ⑦ (with pins ⑧)
   - Gasket ⑨
   - Gearbox cover ⑩
   - Bolts (Gearbox cover) ⑪

Bolt (Gearbox cover):
7 Nm (0.7 m • kg, 5.1 ft • lb)

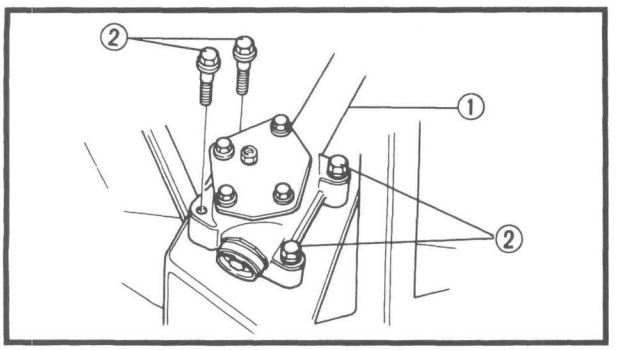

INSTALLATION

Reverse the "REMOVAL" procedure.

Note the following points.

1. Install:
   - Steering gearbox assembly ①
   - Bolts (Gearbox) ②

   onto the frame.

Bolt (Gearbox):
32 Nm (3.2 m • kg, 23 ft • lb)

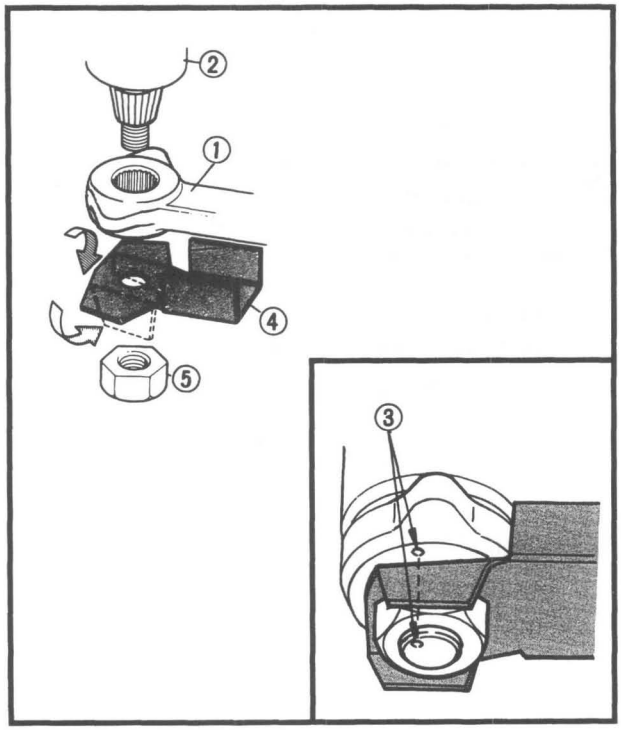

2. Install:
   - Idler arm ①
     onto the pitman arm shaft ②.

NOTE:

Align the I.D. marks ③ with the end of pitman arm shaft, and idler arm.

3. Install:
   - Lock washer ④
   - Locknut (Idler arm) ⑤

	Locknut (Idler Arm): **85 Nm (8.5 m • kg, 61 ft • lb)**

4. Bend the lock washer tabs down tightly against the nut flats.

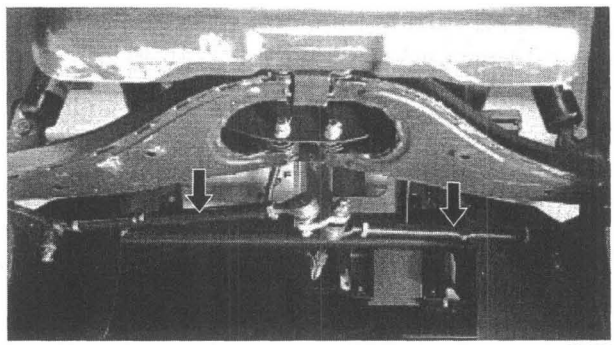

Y-282

5. Install:
   - Tie rod

	Nut (Tie Rod End): **42 Nm (4.2 m • kg, 30 ft • lb)**

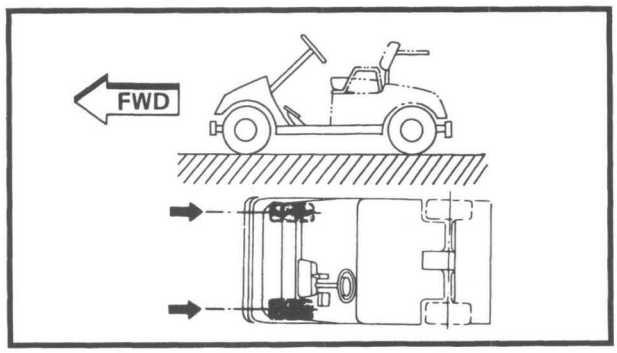

6. Position the front wheels straight ahead.
7. Lightly grease the tapered portion and spline of the steering shaft.

	Lightweight Lithium Soap Base Grease

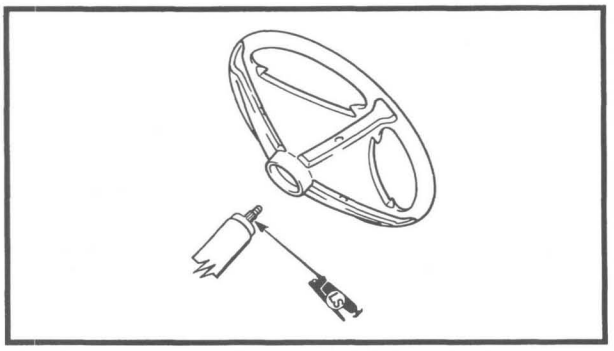

8. Install:
   - Steering wheel
   - Washer
   - Nut (Steering wheel)

Nut (Steering Wheel):
39 Nm (3.9 m • kg, 28 ft • lb)

9. Adjust:
   - Backlash (Worm gear-pitman pins)
     Refer to CHAPTER 2 "STEERING INSPECTION - Steering Wheel Free Play Adjustment" section.

10. Install:
    - Score card holder

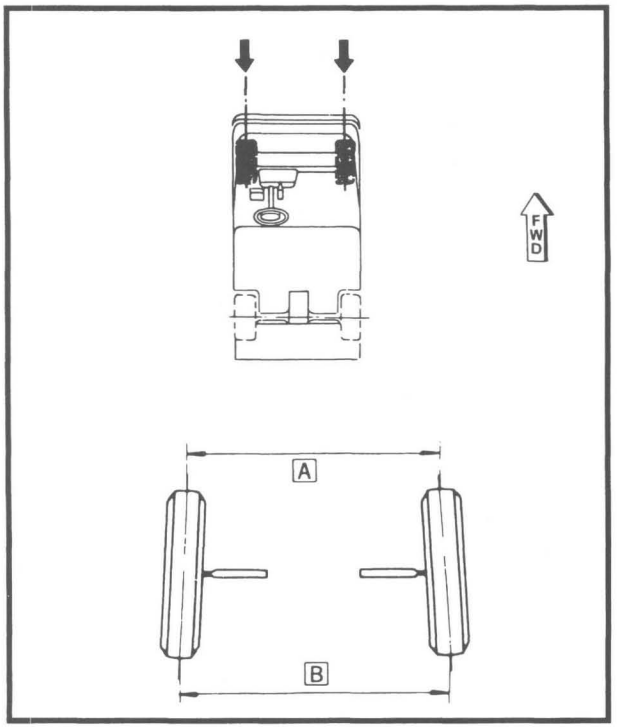

11. Adjust:
    - Toe-in
      Refer to CHAPTER 2 "WHEEL ALIGNMENT" section.

Toe-in (B – A):
Unloaded:
1 ~ 11 mm (0.04 ~ 0.43 in)
Fully loaded: Zero mm (Zero in)

A Center-to-center at front side tire tread.
B Center-to-center at rear side tread.

FRONT SUSPENSION

① Shock absorber assembly
② Front lower arm
③ Bushing
④ Bushing
⑤ Kingpin
⑥ Dust cover
⑦ Spring pin
⑧ Knuckle arm
⑨ Knuckle

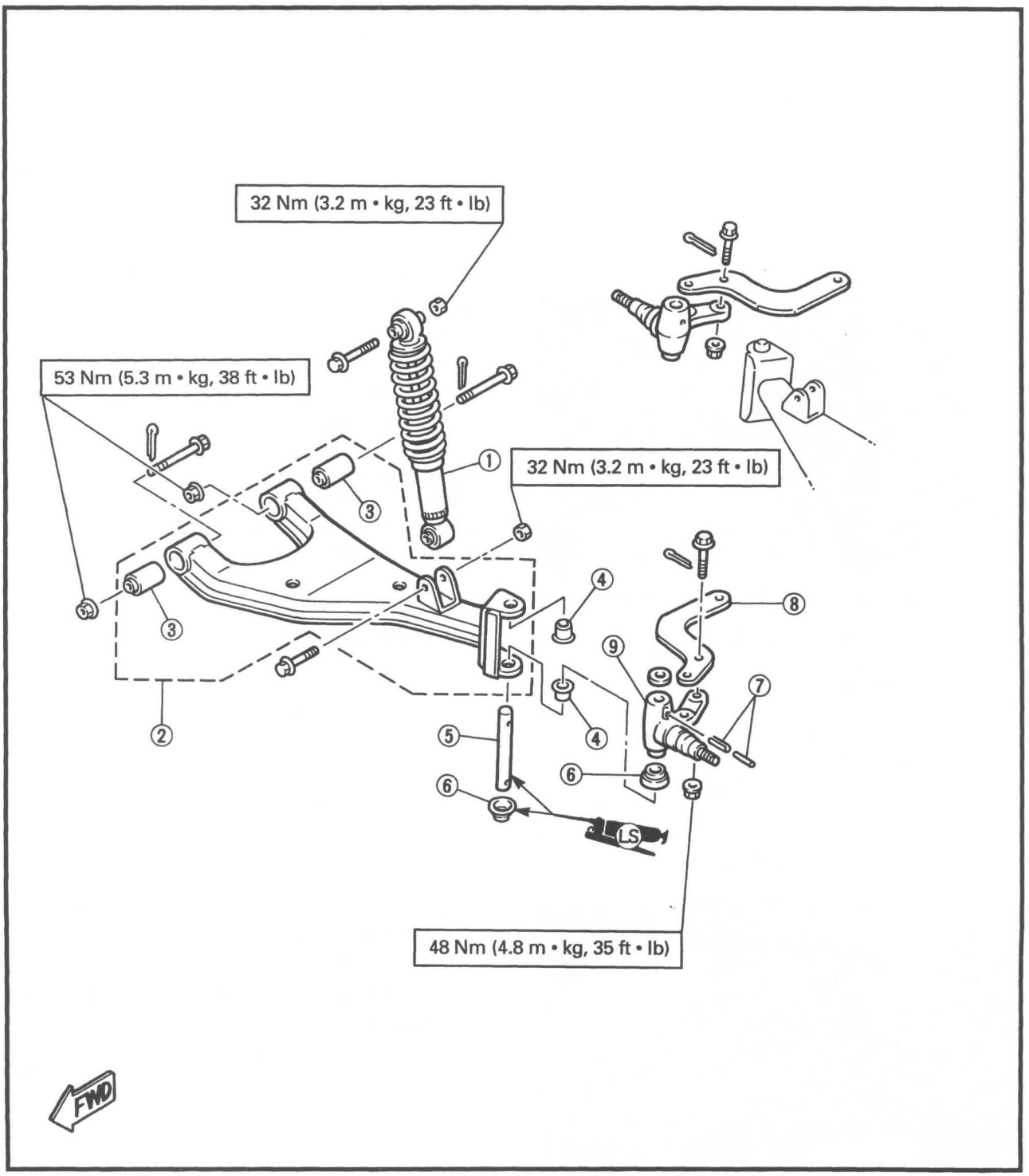

REMOVAL

1. Place the vehicle on a level surface.
2. Apply parking brake.
3. Loosen:
   - Nuts (Front wheel)
4. Jack up the front wheels by placing a suitable stand under the frame.
5. Remove:
   - Front wheel
   - Hub (Front wheel)
     Refer to "FRONT WHEEL – REMOVAL" section. (Page 3-13)

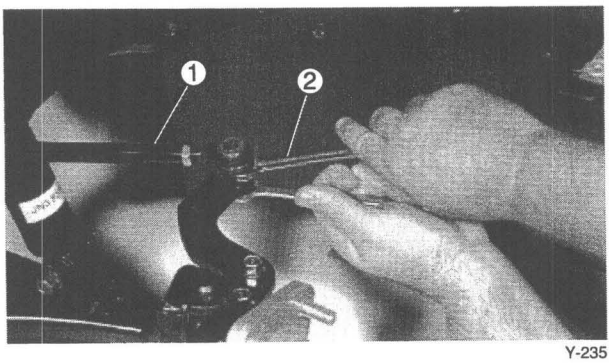

Y-235

6. Remove:
   - Cotter pin
   - Locknut
   - Tie rod ①
     From the knuckle arm.

NOTE:
When removing the locknut, hold the rod end using a 14 mm (0.6 in) wrench ②.

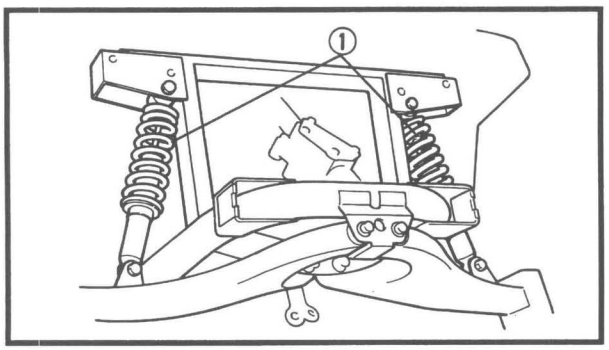

7. Remove:
   - Shock absorbers ①

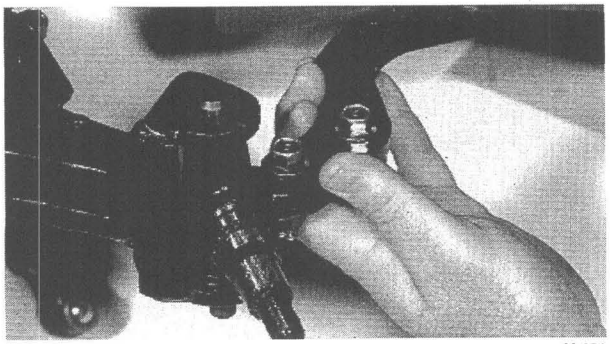
Y-421

8. Check:
   - Pivot bushings
     Try to move the arm back and forth.
     Noticeable free play → Replace pivot bushings.

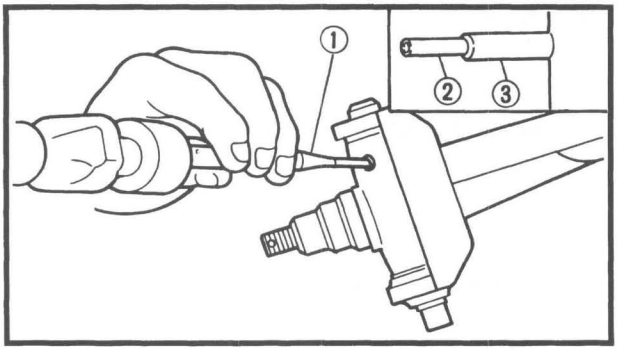

9. Remove:
   - Spring pins
     Use the Valve Guide Remover ① or drift punch.

NOTE:

Before removing the spring pins, remove a knuckle arm bolt (knuckle side).
There are two spring pins. The inner pin locks the outer and must be removed first.

Valve Guide Remover:
YM-4064-A, 90890-04064

② Inner pin
③ Outer pin

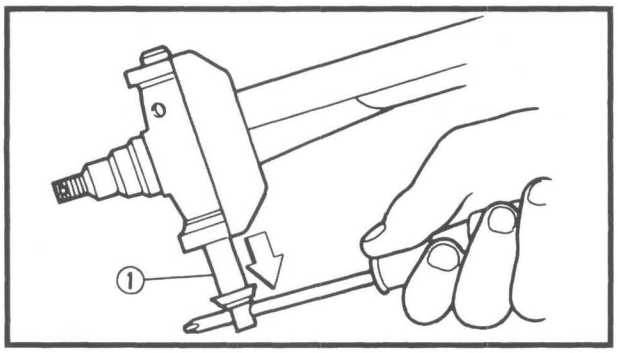

10. Remove:
    - Kingpin ①
    - Knuckle

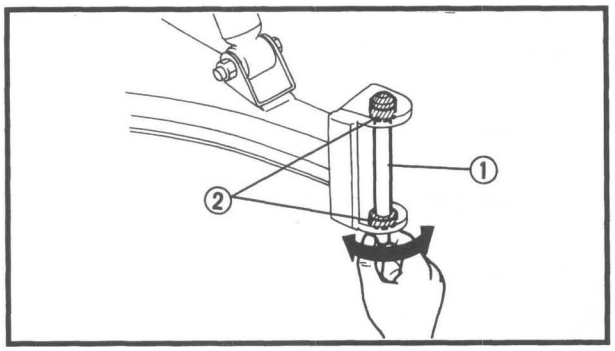

11. Check:
    - Kingpin free play
      Insert the kingpin ① into the bushings ② on the lower arm, move the kingpin side to side.
      Excessive free play → Replace bushings ②, and/or kingpin ①, or lower arm.

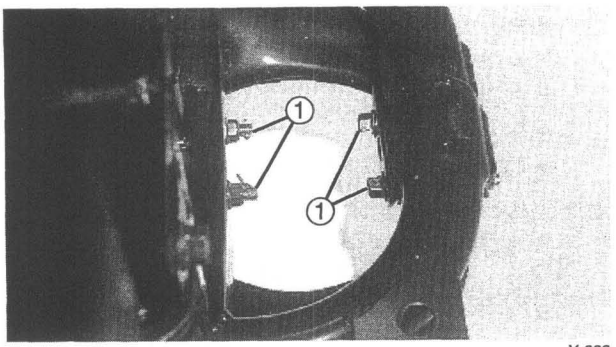

Y-283

12. Remove:
    - Cotter pins
    - Nuts
    - Bolts ①
    - Lower arm

INSPECTION

1. Inspect:
   - Shock absorbers
     Refer to CHAPTER 2 "SHOCK ABSORBER INSPECTION " section.
2. Inspect:
   - Lower arm
     Bends/Damage → Replace.

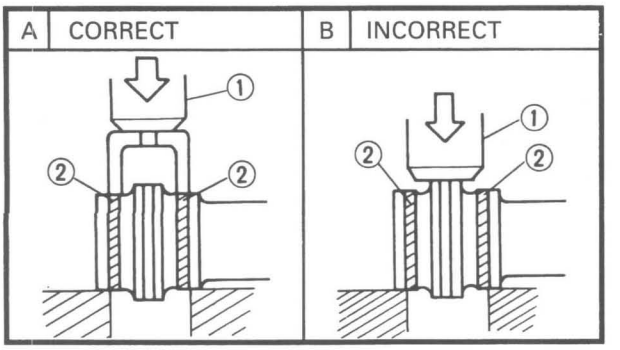

3. Inspect:
   - Bushing (Lower arm pivot)
     Wear/Damage → Replace.

Pivot bushing replacement steps:
- Remove the bushing using a hydraulic press ①.
- Install the new bushing.

NOTE:
Do not press the center collar and rubber of the bushing. Contact should be made only with the outer collar②.

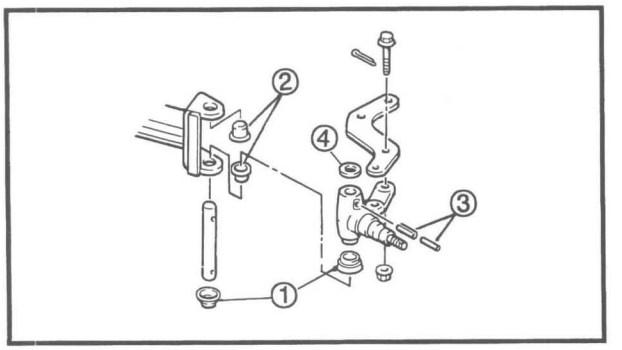

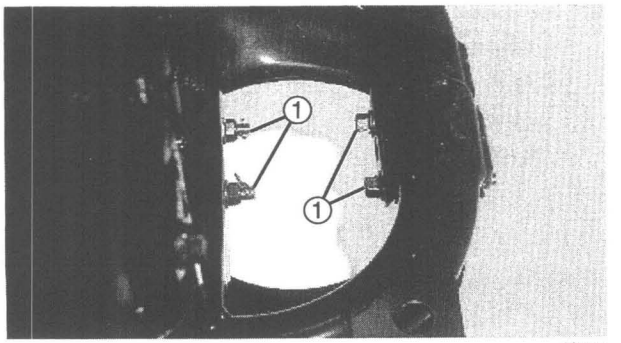

Y-283

4. Inspect:
   - Dust covers ①
   - Bushings ②
   - Spring pins ③
   - Thrust washer ④
     Wear/Damage → Replace.

INSTALLATION

Reverse the "REMOVAL" procedure.
Note the following points.

1. Install:
   - Lower arm
   - Bolts ①
   - Nuts
   - Cotter pins (New)

Nut (Pivot bolt) ①:
53 Nm (5.3 m • kg, 38 ft • lb)

2. Lubricate:
   - Kingpin

Lightweight Lithium Soap Base Grease

3. Install:
   - Knuckle
   - Bolt (Knuckle arm)
   - Shock absorber assembly

Nut (Shock Absorber Pivot):
32 Nm (3.2 m • kg, 23 ft • lb)

4. Install:
   - Tie rod
   - Hub (Front wheel)
   - Front wheel

Nut (Tie Rod End):
42 Nm (4.2 m • kg, 30 ft • lb)
Nut (Hub):
92 Nm (9.2 m • kg, 66 ft • lb)
Nut (Front Wheel):
88 Nm (8.8 m • kg , 64 ft • lb)

REAR ARM SUSPENSION

FOR G14-A

① Shock absorber assembly
② Torsion bar
③ Bushing
④ Rear arm
⑤ Inner panel
⑥ Inner panel
⑦ Thrust cover
⑧ Blind rivet
⑨ Bolt
⑩ Bushing
⑪ Self-locking nut

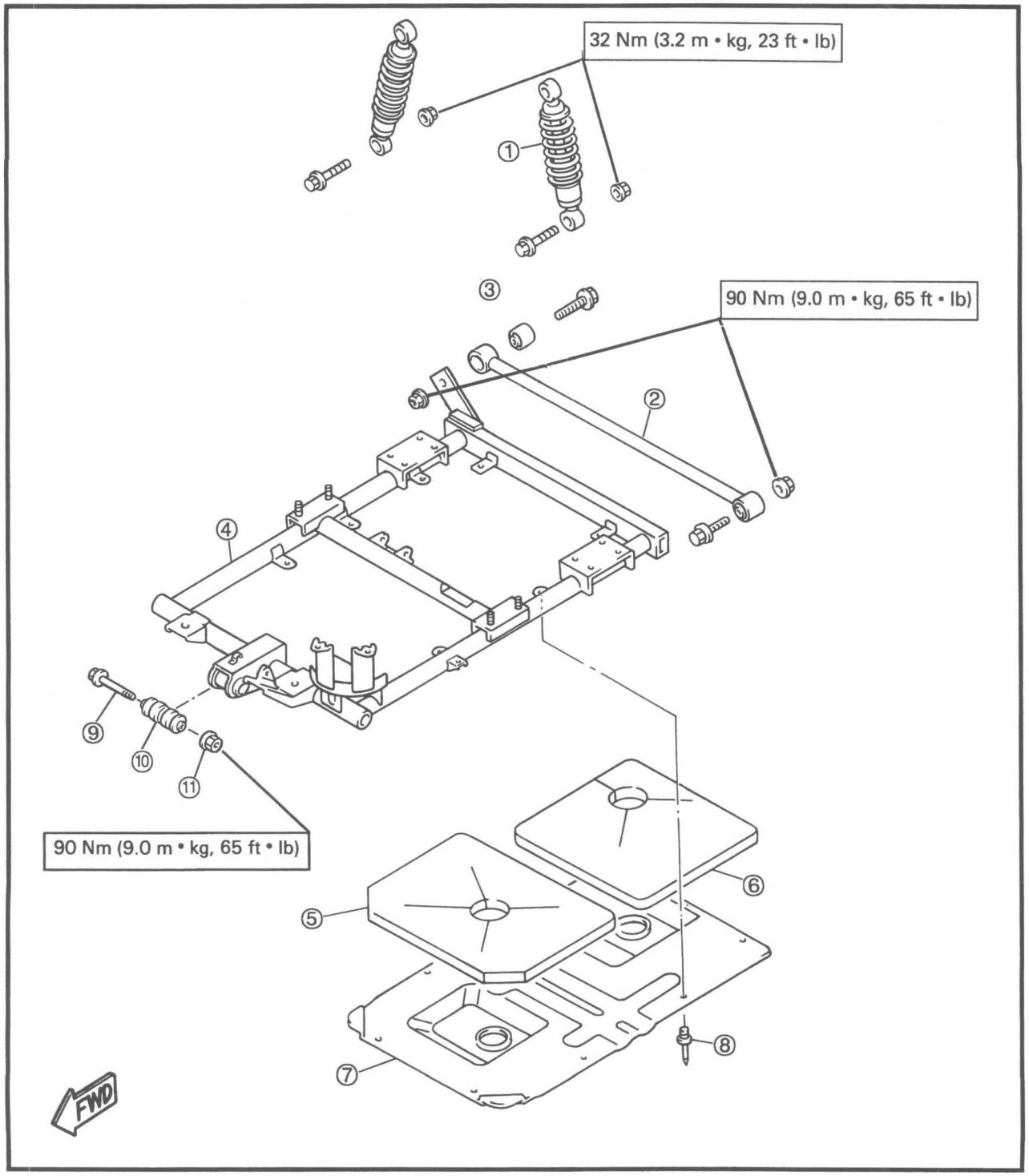

REAR ARM SUSPENSION

FOR G14-E

① Shock absorber assembly
② Torsion bar
③ Bushing
④ Rear arm
⑤ Bolt
⑥ Bushing
⑦ Self-locking nut

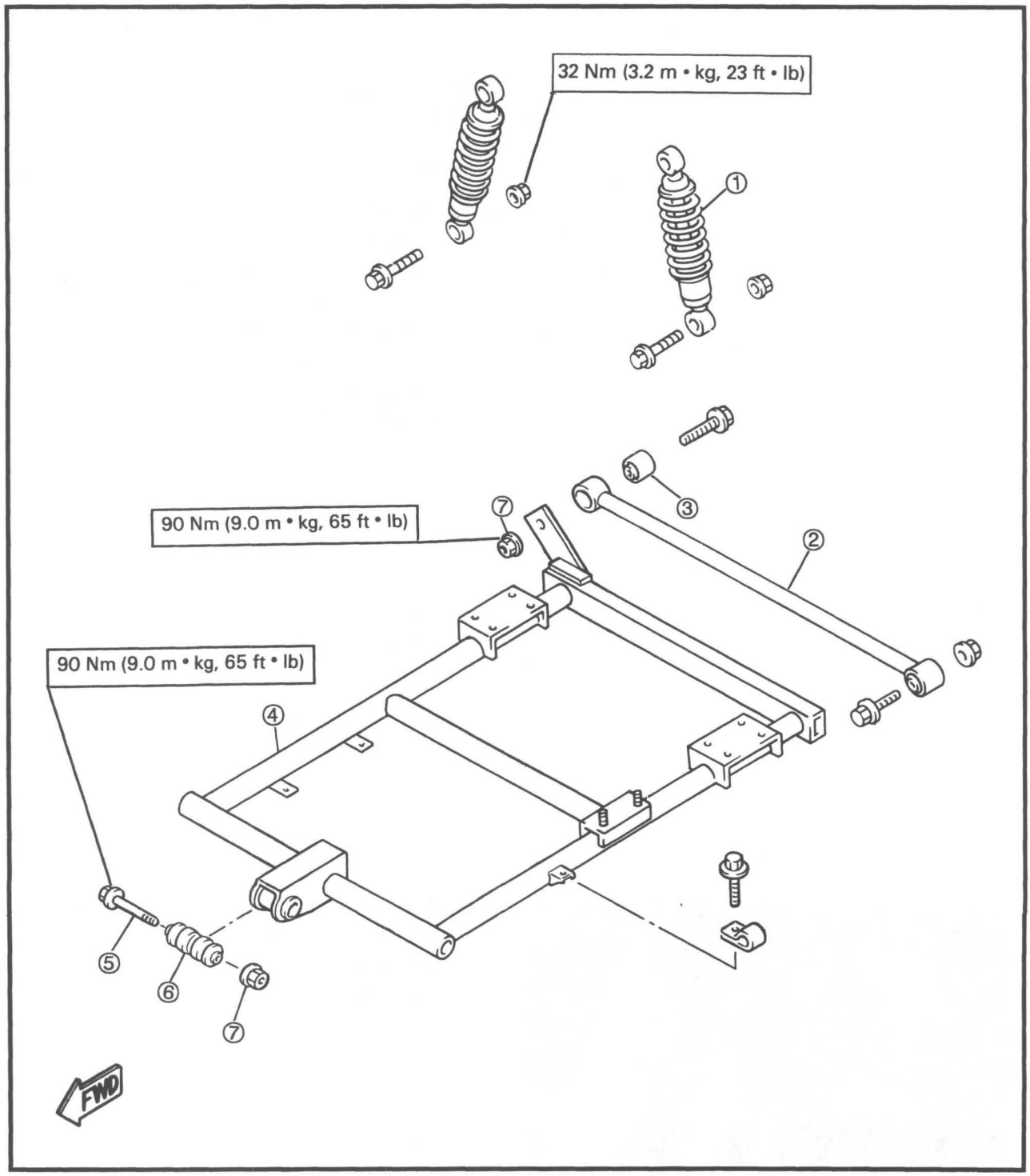

REMOVAL

1. Place the vehicle on a level surface.
2. Jack up the rear wheels by placing a suitable stand under the frame.
   Block the front wheels.

NOTE:
When removing the shock absorbers, support the rear arm with a jack.

3. Remove:
   - Engine (For G14-A)
   - Traction motor/rear axle assembly G14-E
   - Transmission/rear axle assembly G14-A
   Refer to CHAPTER 5 "ENGINE REMOVAL", and CHAPTER 4 "TRANSMISSION" section.
4. Disconnect:
   - Brake cables
5. Remove:
   - Rear shock absorbers

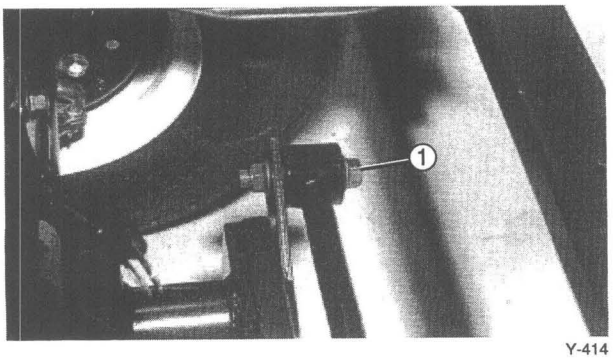

Y-414

6. Remove:
   - Torsion bar bolt ①
   - Rear arm pivot pin
   - Rear arm

INSPECTION

1. Inspect:
   - Shock absorbers
     Refer to CHAPTER 2 "SHOCK ABSORBER INSPECTION" section.
2. Inspect:
   - Rear arm
     Bends/Damage → Replace.
3. Inspect:
   - Bushing (Rear arm pivot)
     Wear/Damage → Replace.
     Refer to "FRONT SUSPENSION – INSPECTION" section. (Page 3-39)
4. Inspect:
   - Torsion bar
     Damage/Bends → Replace.
   - Torsion bar bushings
     Damage/Wear → Replace.

INSTALLATION

Reverse the "REMOVAL" procedure.
Note the following points.

1. Install:
   - Rear arm
   - Transmission/rear axle assembly G14-A
   - Engine (For G14-A)
   - Traction motor/rear axle assembly G14-E
   - Rear shock absorbers
   - Brake cables
   - Torsion bar

Nut (Rear Arm Pivot):
90 Nm (9.0 m • kg, 65 ft • lb)
Bolt ~ Rear axle assembly to rear arm
64 Nm (6.4 m • kg, 46 ft • lb)
Bolt ~ Transmission case to rear arm G14-A
23 Nm (2.3 m • kg, 17 ft • lb)
Nut ~ Engine mount G14-A
35 Nm (3.5 m • kg, 25 ft • lb)
Nut ~ Shock absorber pivot
32 Nm (3.2 m • kg, 23 ft • lb)

CABLE MAINTENANCE

NOTE:
Cables must be kept properly lubricated to prevent deterioration.

⚠ WARNING

Improperly routed or adjusted cables may make the golf car unsafe. Before connecting cables, consult "CABLE ROUTING" in Chapter 9 for proper routing.

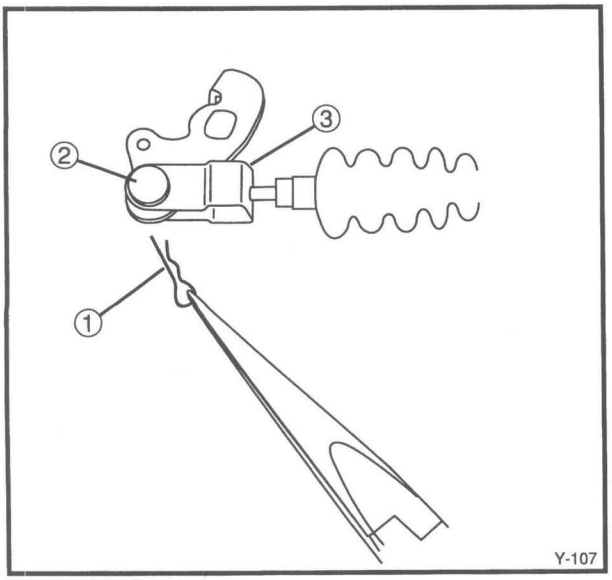

1. Disconnect clevis attachments by removing:
   - Cotter pin ①
   - Clevis pin ②
   - Retaining clip ③

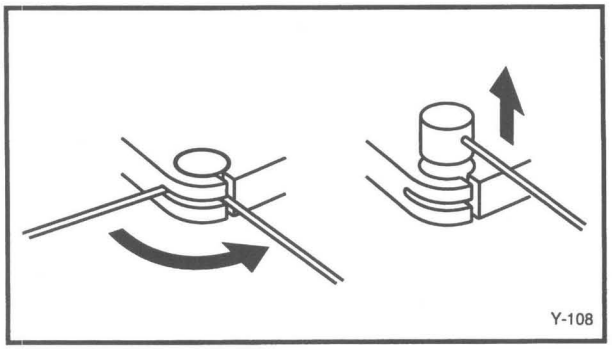

2. Disconnect pin attachments by disconnecting:
   - Clevis end of cable
     Turn cable so it aligns with slot and pull upward.
3. Remove:
   - Cables
     From the clamps and bands.
4. Check:
   - Cable free movement
     Inspect for obstructions, wear, or damage.
     Kinking/Frayed strands/Damage → Replace.

5. Lubricate:
   - Cables
     Use the Cable Injector.

Cable Injector:
ACC-11110-43-15, 90890-70054

NOTE:

Choice of lubricant depends upon conditions and preferences. The use of a semi-drying chain and cable lubricant will perform adequately under most conditions.

6. Install:
   - Cables
     Reverse the removal procedure.
7. Adjust:
   - Free play (Brake cable)
   - Free play (Throttle cable 1, 2) (For G14-A)
   - Free play (Choke cable) (For G14-A)
     Refer to CHAPTER 2 "BRAKE CABLE INSPECTION," "THROTTLE CABLE ADJUSTMENT" and "CHOKE CABLE ADJUSTMENT" section.

Free play (Brake Cable):
25 ~ 30 mm (0.98 ~ 1.18 in)
Free Play (Throttle Cable 1):
0.2 ~ 0.5 mm (0.008 ~ 0.020 in)
Free Play (Throttle Cable 2):
0.5 mm (0.02 in)
Free Play (Choke Cable):
1.0 mm (0.04 in)

FRAME

FOR G14-A

① Frame
② Body mounting support
③ Body protect plate
④ Plate

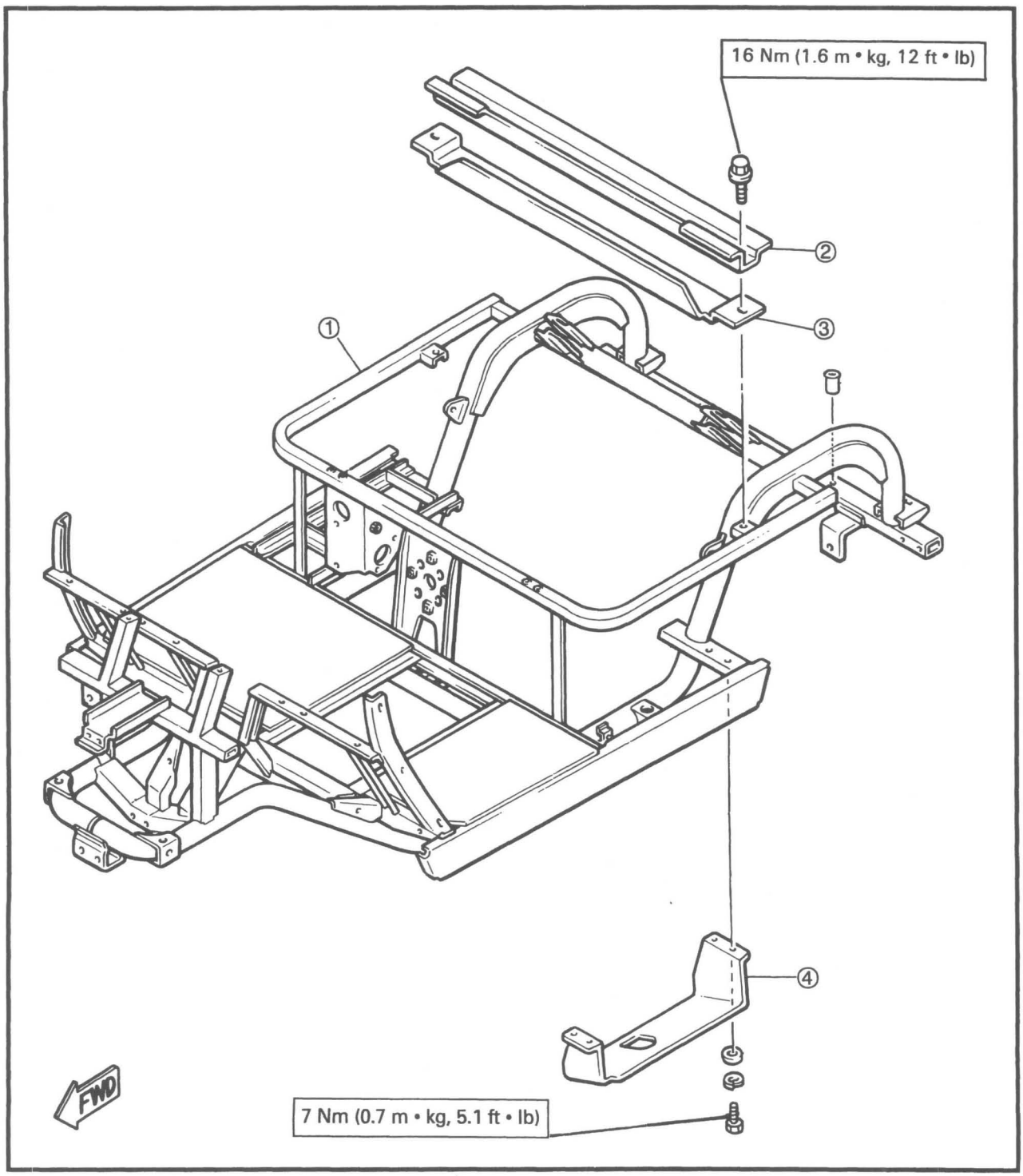

FRAME

FOR G14-E

① Frame
② Body mounting support
③ Blind rivet

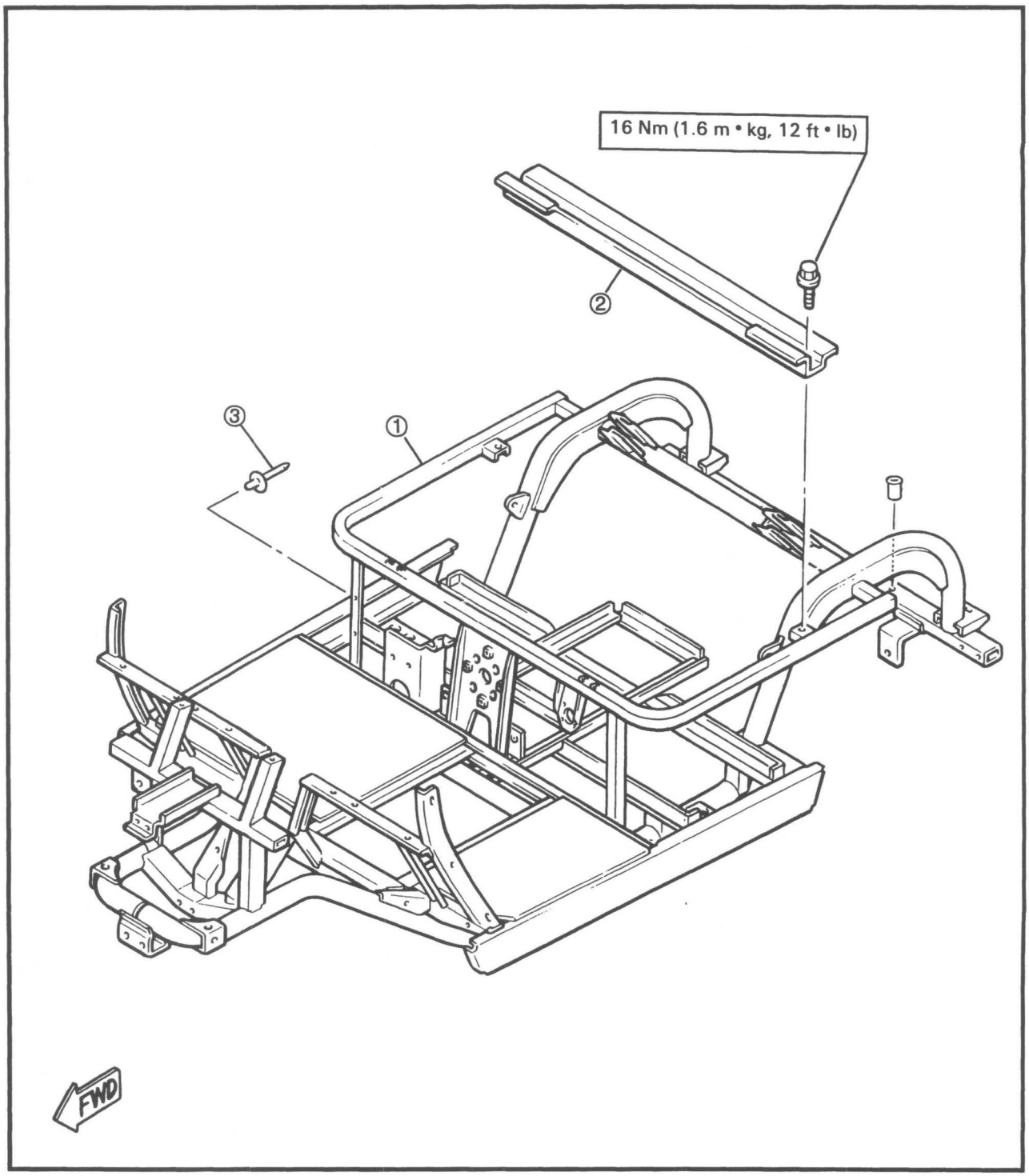

CHAPTER 4
POWER TRAIN

POWER TRAIN

POWER TRAIN FOR G14-A

PRIMARY SHEAVE

① Fixed sheave
② Drive belt
③ Sliding sheave
④ Grease nipple
⑤ Oil seal
⑥ Spider
⑦ Weight assembly
⑧ Plastic washer (thin washer)
⑨ Plastic washer (thick washer)
⑩ Sheave cap
⑪ Securing bolt
⑫ Pivot pin (Spider)
⑬ Slider
⑭ Pivot pin (Sliding sheave)
⑮ Pivot pin screw

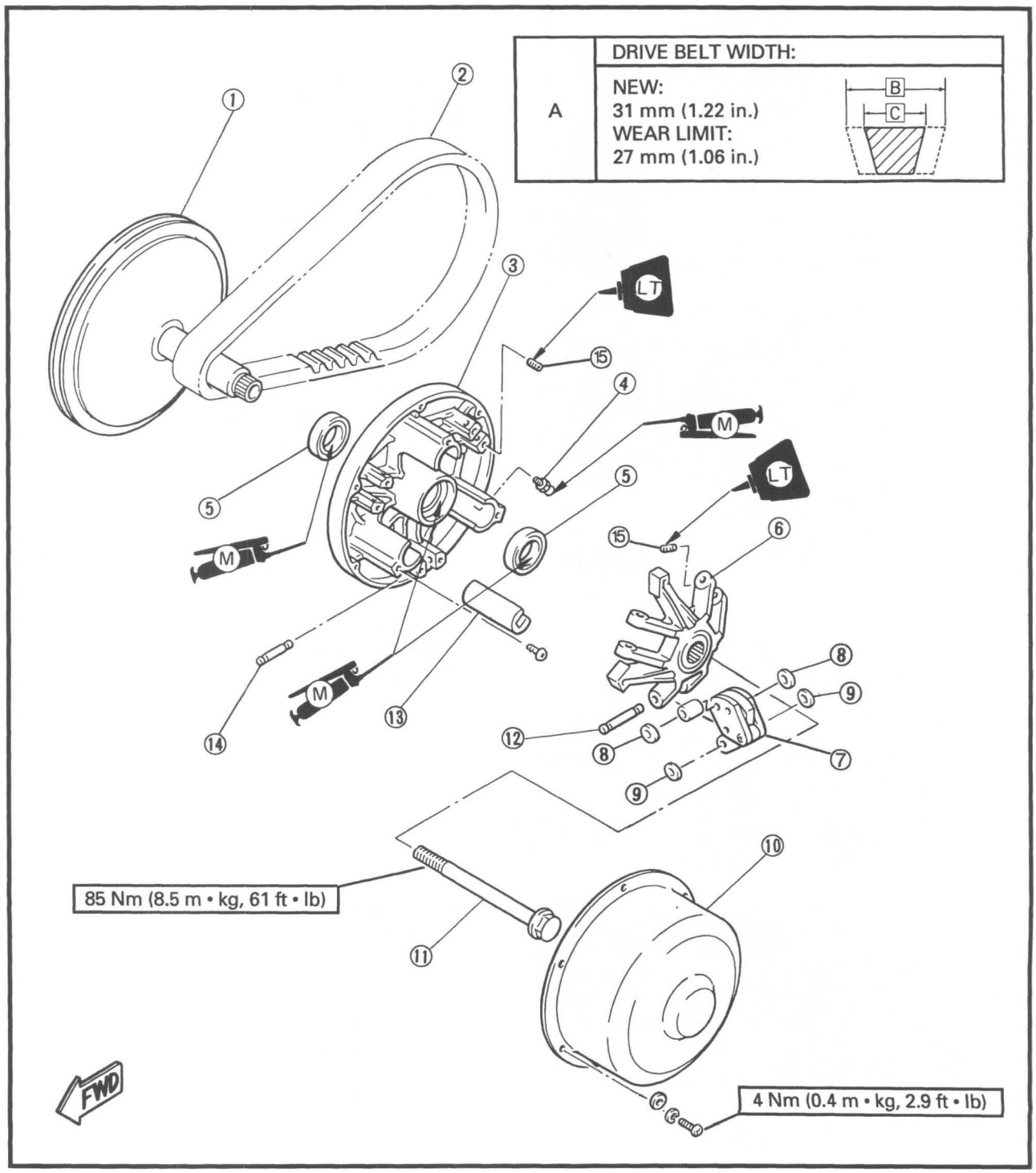

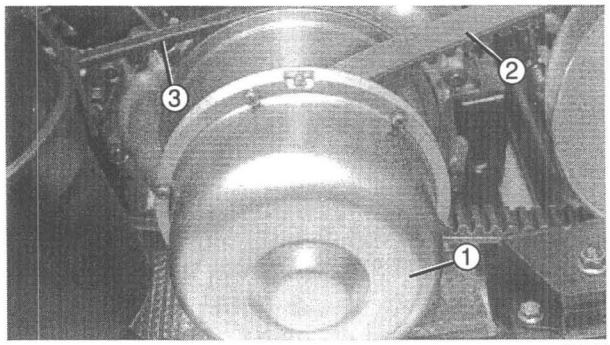

Y-284

REMOVAL

1. Remove:
   - Seat
   - Primary sheave cap screws
   - Primary sheave cap ①
   - Drive belt ②
   - Starter belt ③

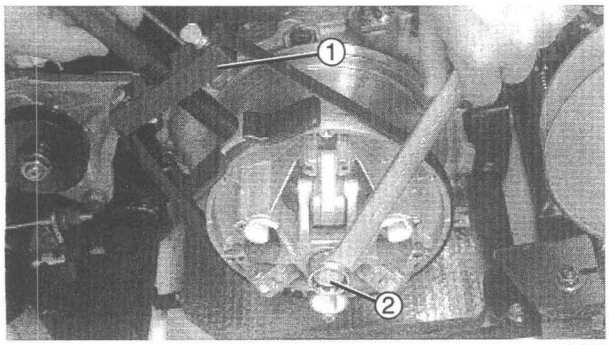

Y-285

2. Attach:
   - Primary Sheave Holder ①

	Primary Sheave Holder: **YS-1880-A, 90890-01701**

3. Remove:
   - Bolt (Primary Sheave) ②

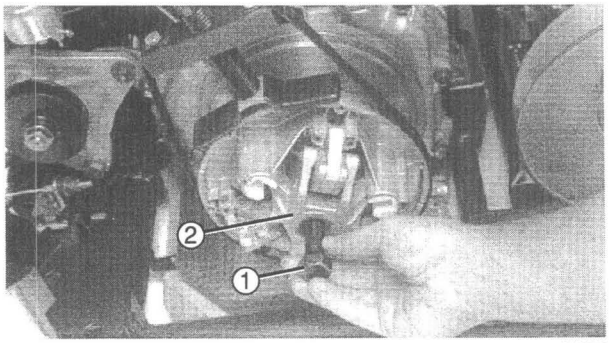

Y-286

4. Attach:
   - Primary Sheave Puller ①

	Primary Sheave Puller: **YG-1876, 90890-01876**

5. Remove:
   - Primary sheave assembly ②
     When removing the sheave ②, tighten the sheave puller ①.

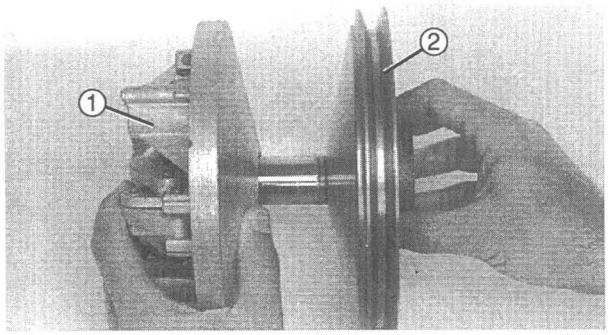

Y-287

DISASSEMBLY

1. Separate the sliding sheave ① from the fixed sheave ②.

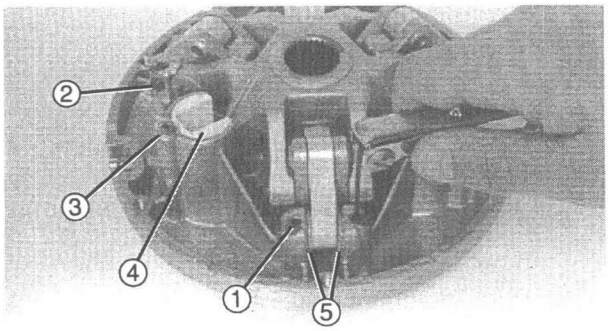

Y-288

2. Remove:
   - Screws ①
   - Pivot pins ②
   - Screws ③
   - Sliders ④
   - Plastic washers ⑤

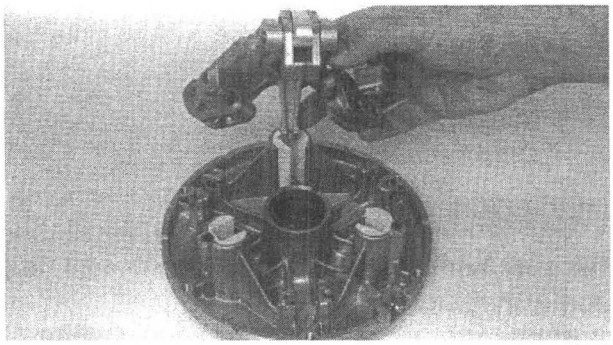

Y-289

3. Separate the sliding sheave from the spider.

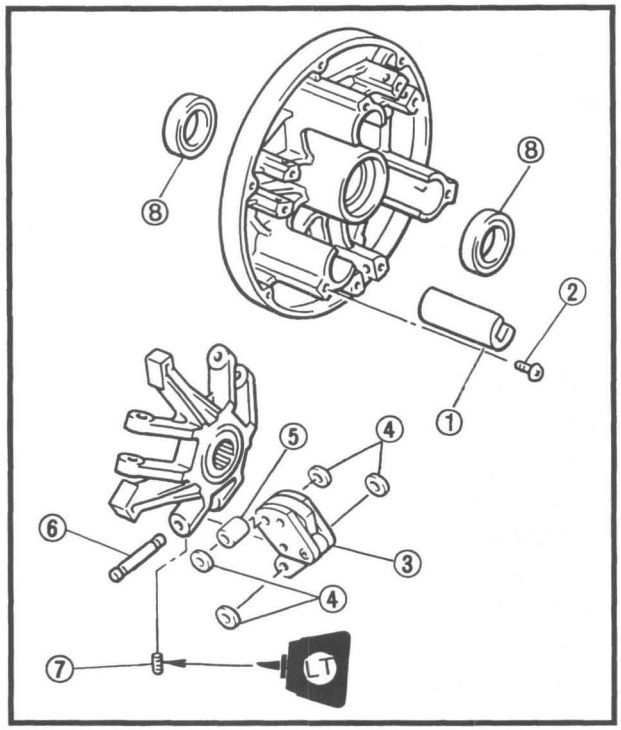

INSPECTION

1. Inspect:
   - Weights ③
     Unsmooth operation/Damage → Replace.
   - Pivot pins ⑥
   - Plastic washers ④
   - Collars ⑤
   - Sliders ①
     Wear/Scratches/Damage → Replace.
   - Oil seals ⑧
     Wear/Damage → Replace.

ASSEMBLY

Reverse the "DISASSEMBLY" procedure.
Note the following points.

1. Install:
   - Sliders ①
   - Screws ②
     On to sliding sheave.
2. Install:
   - Weights ③
   - Plastic washers ④
   - Collars ⑤
   - Pivot pins ⑥
     On to sliding sheave.
   - Screws ⑦

NOTE:

Apply LOCTITE ® to the pivot pin screws ⑦.

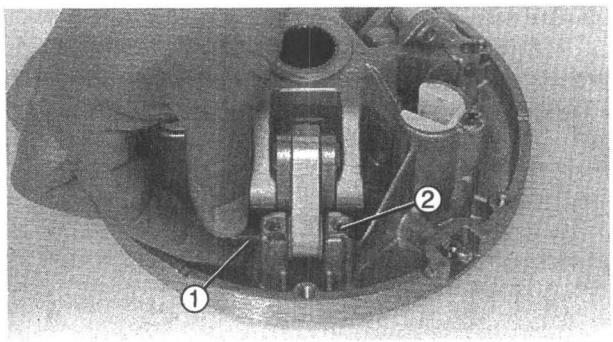

Y-290

3. Position:
   - Spider
     Into sliding sheave.
4. Connect the link arm of the weight onto the sliding sheave using the pivot pins ① and washers.
5. Tighten the screws ② holding the pivot pins in place.

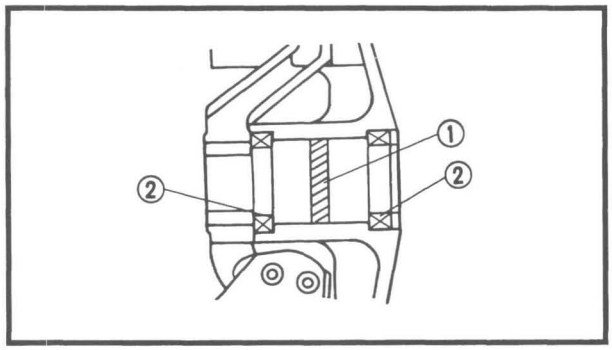

6. Grease the bushing ① and oil seal lips ② in side of the sliding sheave.
7. Install:
   - Sliding sheave
     Onto fixed sheave.

CAUTION

Do not damage or deform the oil seal lips during installation.

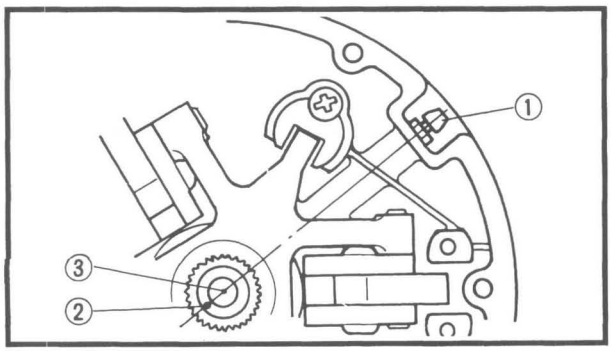

8. Engage the serration in the spider with the fixed sheave.

NOTE:

The grease nipple ① must be in line with the punch mark ② and the center ③ of the crankshaft as shown in the illustration.

INSTALLATION

Reverse the "REMOVAL" procedure.
Note the following points.

1. Remove any oil and/or grease from the tapered portion of crankshaft and primary sheave using a non-oily solvent.
2. Install:
   - Primary sheave assembly
   - Sheave securing bolt
     Lightly tighten the bolt in this step.
3. Check:
   - Sliding sheave operation
     Push and pull the sliding sheave by hand.
     Unsmooth operation → Disassemble primary sheave and reinspect.

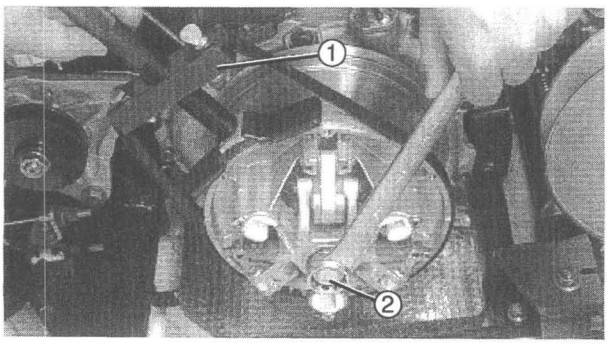

Y-285

4. Attach:
   - Primary Sheave Holder ①

	**Primary Sheave Holder:** **YS-1880-A, 90890-01701**

5. Tighten:
   - Bolt (Primary Sheave) ②

	**Bolt (Primary Sheave):** **85 Nm (8.5 m • kg, 61 ft • lb)**

6. Install:
   - Primary sheave cap
   - Drive belt
     Refer to CHAPTER 2 "DRIVE BELT INSPECTION" section.
   - Starter belt

SECONDARY SHEAVE

① Woodruff key
② Spring seat
③ Compression spring
④ Cotter pin
⑤ Securing nut
⑥ Washer
⑦ Fixed sheave
⑧ Plastic washer
⑨ Oil seal
⑩ Grease nipple
⑪ Sliding sheave
⑫ Circlip
⑬ Ramp shoe
⑭ Bolt

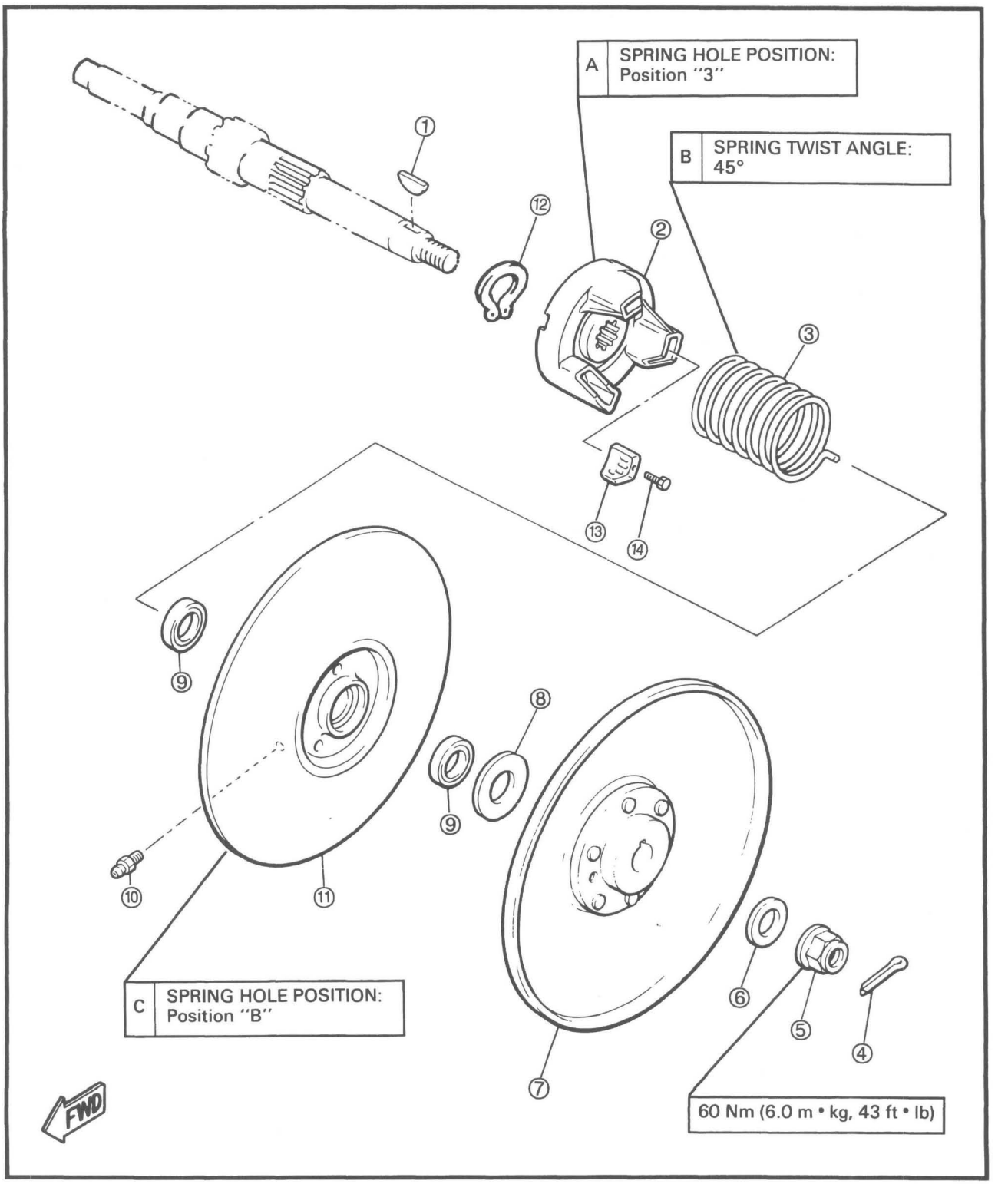

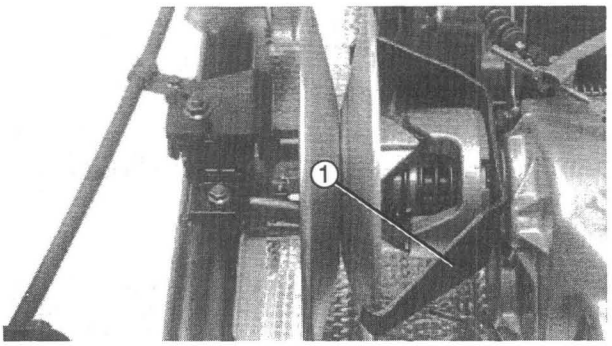

Y-291

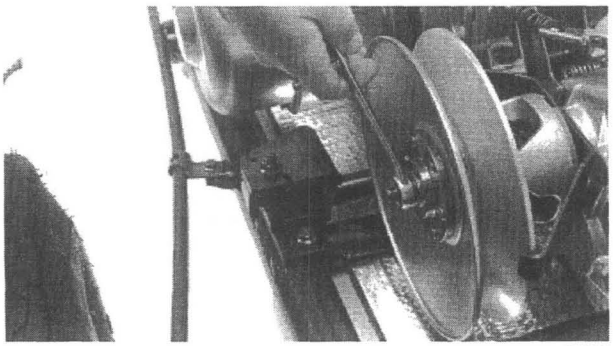
Y-292

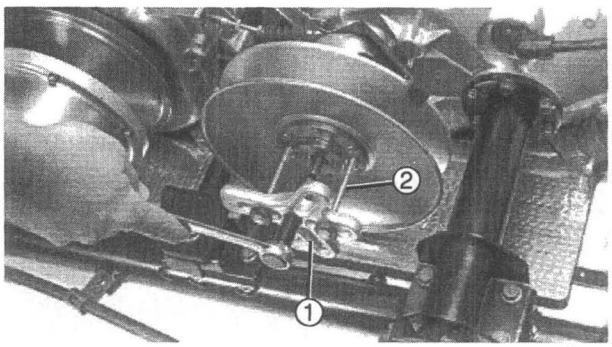

Y-293

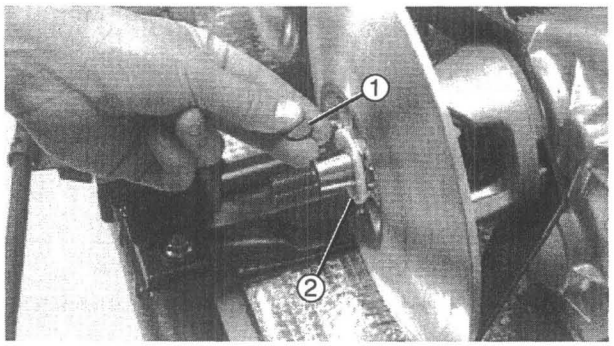

Y-294

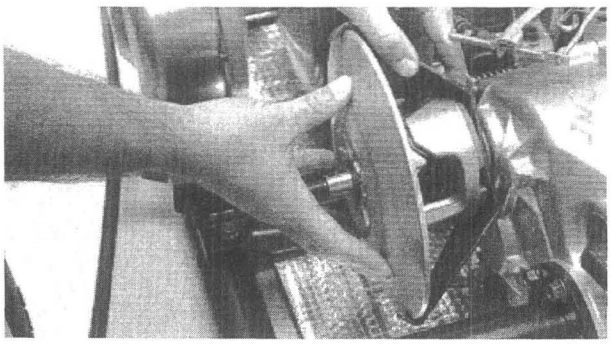
Y-295

DISASSEMBLY

1. Remove the rear cowling.
   Refer to CHAPTER 3 "REAR COWLING" section.
2. Remove the drive belt.
3. Put car in gear and set parking brake.
4. Attach:
   - Secondary Sheave Holder ①

	Secondary Sheave Holder: **YG-40103-A, 90890-01705**

5. Remove:
   - Cotter pin
   - Sheave securing nut
   - Washer

6. Attach:
   - Universal Puller ①
   - 6 mm Bolts ②

	Universal Puller: **YU-33270-B, 90890-01362** **6 mm Bolt:** **YU-90105-2**

7. Remove:
   - Fixed sheave
   - Woodruff key ①
   - Plastic washer ②
   (from the input shaft)

8. Remove:
   - Secondary Sheave Holder
   When removing the sheave holder, push in the sliding sheave by hand.
9. Release spring force slowly, then remove the sliding sheave.
10. Remove:
    - Compression spring
    - Spring seat

INSPECTION

1. Inspect:
   - Sliding sheave
   - Fixed sheave
     Warpage/Scratches/Damage → Replace.
   - Circlip on input shaft
     Wear/Damage → Replace.

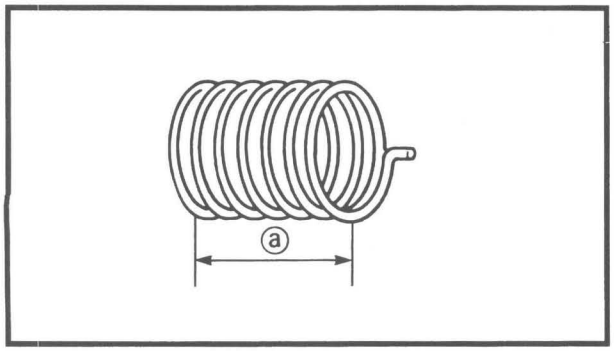

2. Measure:
   - Free length (Secondary spring) ⓐ
     Less than specification → Replace.

Free Length (Secondary spring):
Limit: 100 mm (3.94 in)

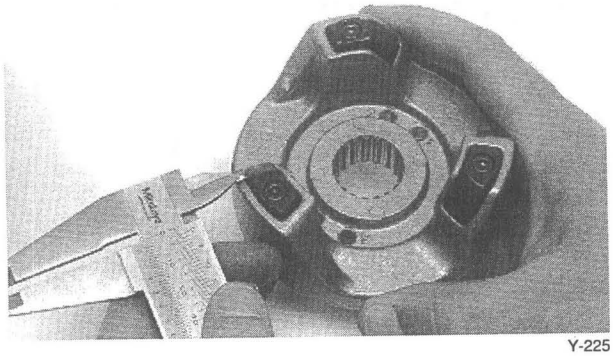
Y-225

3. Measure:
   - Ramp shoe thickness
     Out of specification → Replace.

Wear Limit:
1.0 mm (0.04 in)

4. Inspect:
   - Oil seal
     Wear/Damage → Replace.
   - Bushing
     Wear/Damage → Replace.

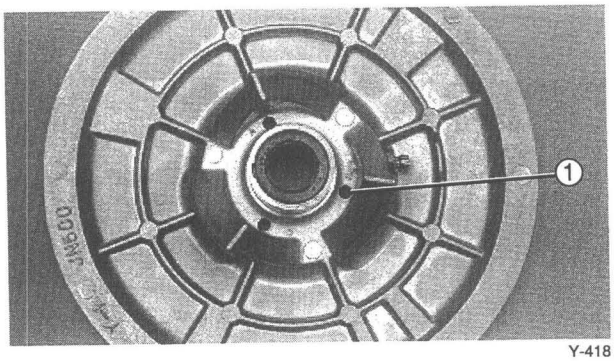

Y-418

ASSEMBLY

Reverse the "DISASSEMBLY" procedure.
Note the following points.

1. Install:
   - Spring seat
     Onto the input shaft.
2. Grease the bushing and oil seal lips inside of the sliding sheave.
3. Hook the spring end into the spring hole "B" ① in the sheave.
4. Install the spring and sliding sheave onto the input shaft.
5. Hook the other end of spring into the hole "3" ② in the spring seat.

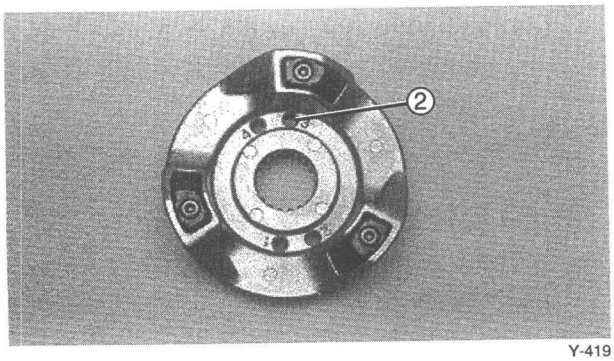

Y-419

6. Install:
   - Secondary Sheave Holder
     Onto the sliding sheave.

Secondary sheave holder installation steps:
- Push the sliding sheave in while turning it approx 45° clockwise to preload the spring. Then hold the sheave in this position.
- Hook the Secondary Sheave Holder onto the sliding sheave.

Secondary Sheave Holder:
YG-40103-A, 90890-01705

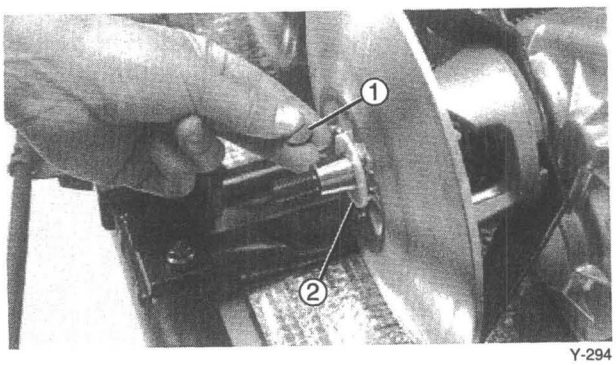

Y-294

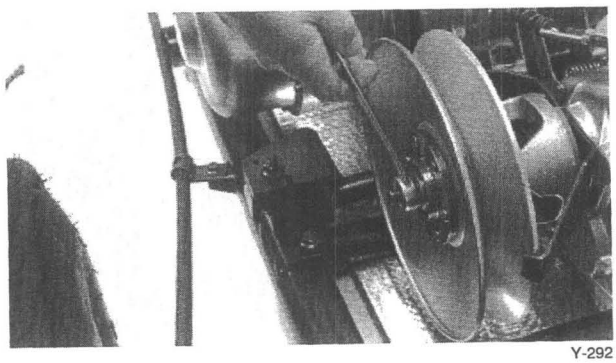
Y-292

7. Remove any oil and/or grease from the tapered portion of input shaft and fixed sheave using a non-greasy solvent.
8. Install:
   - Plastic washer ②
   - Woodruff key ①
   - Fixed sheave
   - Washer
   - Securing nut

Primary Sheave Holder:
YS-1880-A, 90890-01701

9. Tighten:
   - Nut (Secondary sheave)

Nut (Secondary sheave):
60 Nm (6.0 m • kg, 43 ft • lb)

10. Install:
    - Cotter pin (New)
11. Remove the excess grease from the sheaves and input shaft.
12. Install the drive belt.

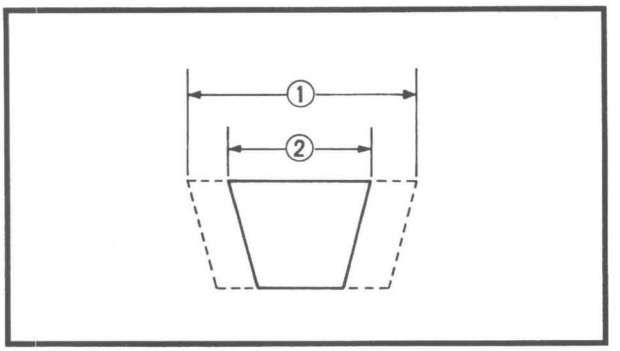

DRIVE V-BELT

INSPECTION AND REPLACEMENT

Refer to CHAPTER 2 "DRIVE BELT INSPECTION " section.

Drive Belt Width:
New ① : 31 mm (1.22 in)
Wear limit ② : 27 mm (1.06 in)

TRANSMISSION

① Transmission case (Right)
② Primary gear (Forward)
③ Input shaft
④ Idler shaft
⑤ Idle gear (Reverse)
⑥ Transmission case (Left)
⑦ Differential case
⑧ Differential side gear
⑨ Differential pinion
⑩ Differential side gear
⑪ Ring gear
⑫ Counter gear 2
⑬ Spacer
⑭ Counter gear (Forward)
⑮ Counter shaft
⑯ Dog clutch
⑰ Thrust washer
⑱ Counter gear (Reverse)
⑲ Shift fork
⑳ Shift fork bar
㉑ Pin
㉒ Shift lever shaft
㉓ Shift lever
㉔ Shifting cable
㉕ Oil level plug
㉖ Drain plug

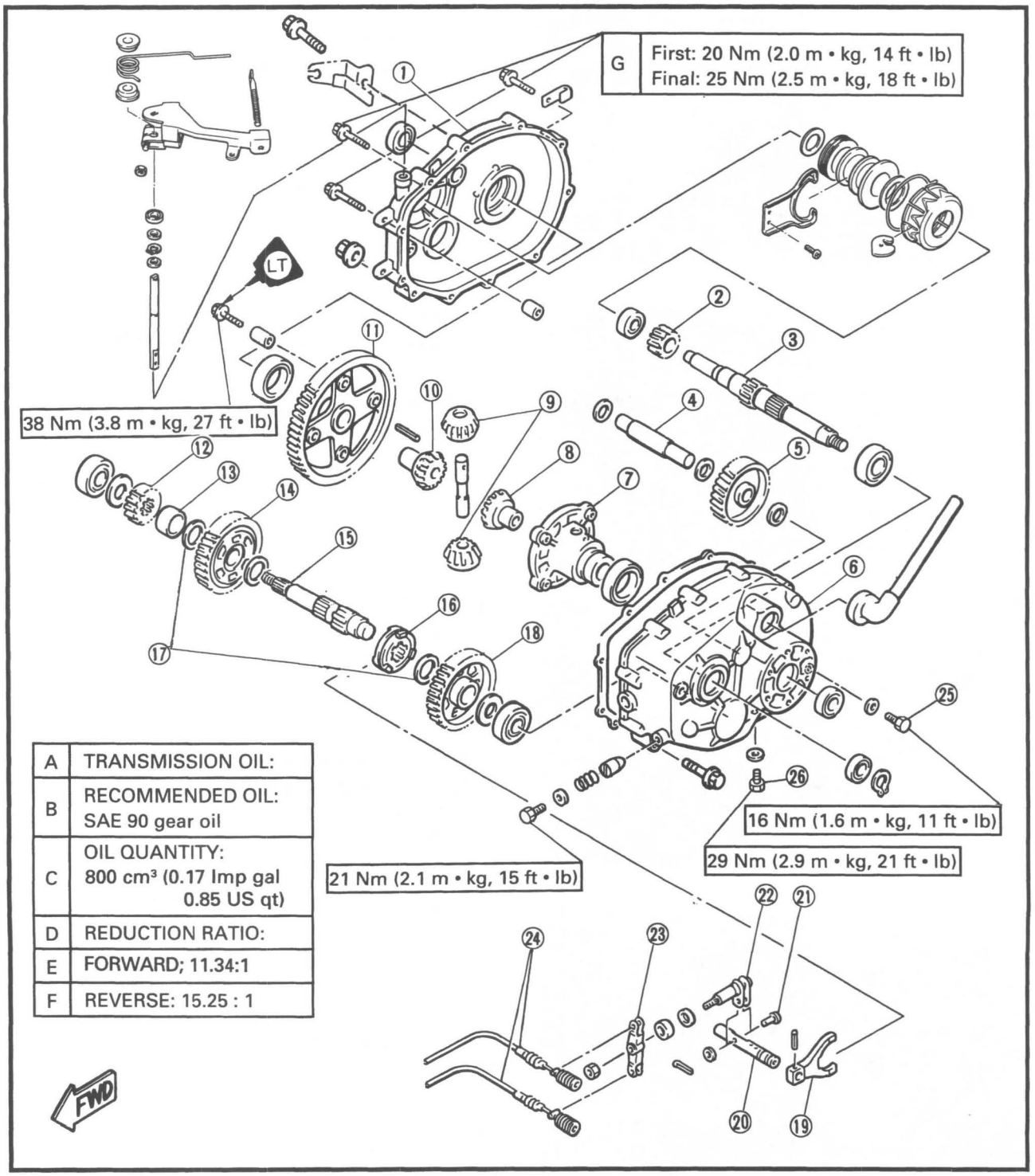

A	TRANSMISSION OIL:
B	RECOMMENDED OIL: SAE 90 gear oil
C	OIL QUANTITY: 800 cm³ (0.17 Imp gal 0.85 US qt)
D	REDUCTION RATIO:
E	FORWARD; 11.34:1
F	REVERSE: 15.25 : 1

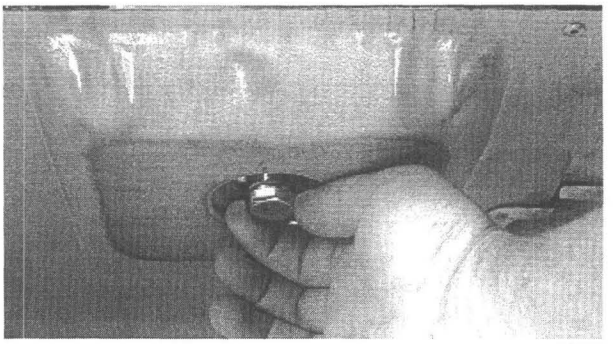
Y-297

REMOVAL

1. Place an oil pan under the transmission case.
2. Remove:
   - Drain plug
     Drain the transmission oil.

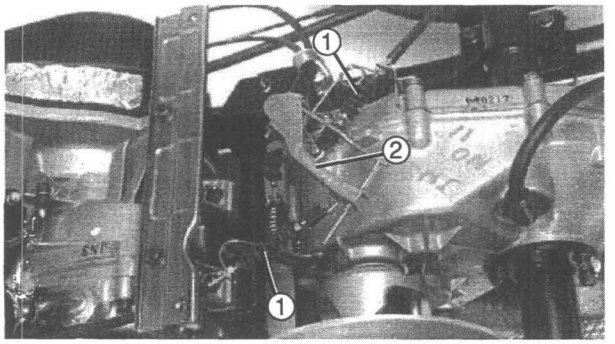

Y-298

3. Remove:
   - Muffler
     Refer to CHAPTER 5 "ENGINE REMOVAL – MUFFLER" section.
4. Disconnect:
   - Throttle cables ①
     From the speed limit lever ②.

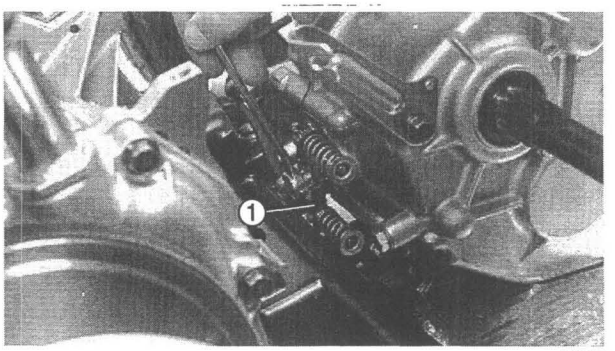

Y-299

5. Disconnect:
   - Shifting cables (with shift lever) ①
     from the shift lever.
6. Remove:
   - Secondary sheave

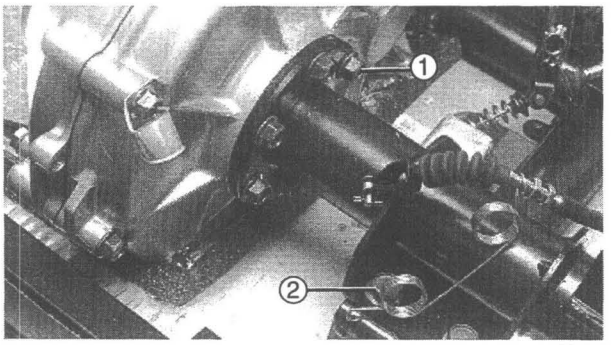

Y-300

7. Remove:
   - Bolts
     from the axle housing case ① and rear arm ②.

NOTE:
When removing the bolts, support the rear arm with a jack.

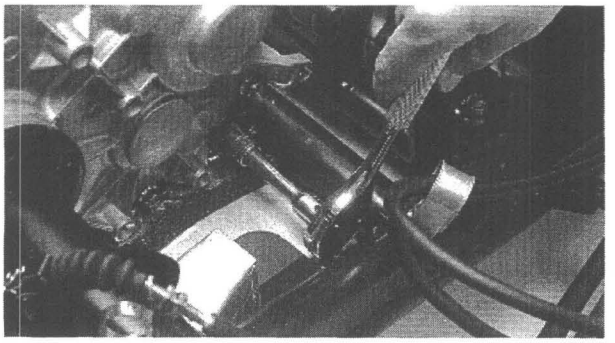
Y-301

8. Disconnect the axle shafts from the differential gear.
9. Remove:
   - Case mounting bolt
10. Remove:
    - Transmission case assembly

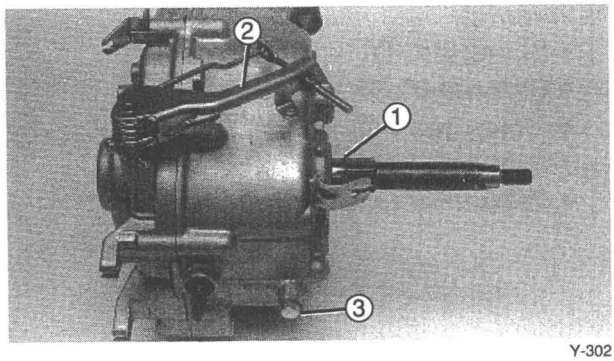

Y-302

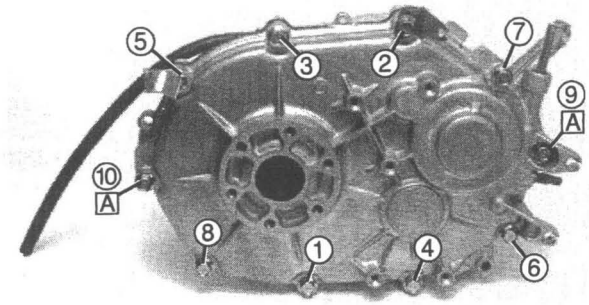

Y-303

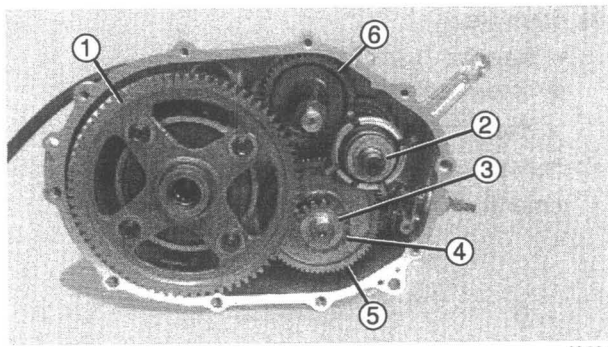

Y-304

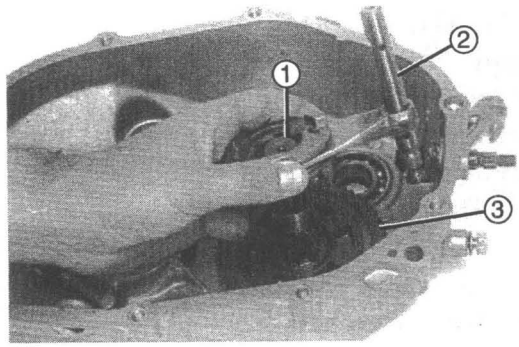

Y-305

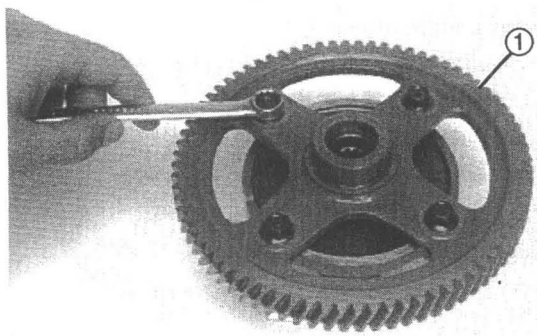

Y-306

DISASSEMBLY

1. Remove:
   - Circlip ①
     From the input shaft.
2. Remove:
   - Speed limiter lever ②
     From the governor shaft.
3. Loosen:
   - Knock pin plug ③
     Loosen the plug completely but do not remove it in this step.
4. Remove:
   - Bolts (numbers shown indicate loosening sequence)
   - Transmission case (Right)
     Pull the case straight out from the transmission assembly.

CAUTION

Do not drive chisels, screwdrivers, etc. between the case halves. Tap with soft mallet if necessary to loosen case.

A LONGER BOLTS WITH DOWEL PINS

5. Remove:
   - Ring gear assembly ①
   - Input shaft (with governor) ②
   - Thrust washer ③
   - Counter gear 2 ④
   - Counter gear (Forward) ⑤
   - Idle gear (with shaft) ⑥

6. Remove:
   - Dog clutch ①
     (with shift fork/bar assembly) ②
   - Counter shaft (with gear) ③
   - Plug
   - Spring
   - Knock pin
   - Shift lever shaft

7. Remove:
   - Bolts
     Loosen in a criss-cross pattern.
8. Remove:
   - Ring gear ①
   - Differential case assembly
   - Side gear (Right)
   - Dowel pins

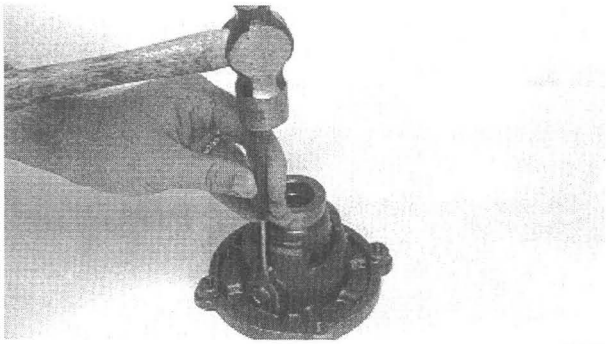

Y-307

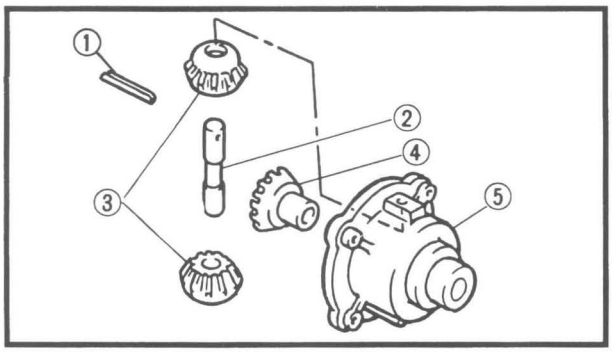

9. Remove:
   - Spring pin ①
   - Pinion shaft ②
   - Pinion gears ③
   - Side gear (Left) ④
   - Differential case ⑤

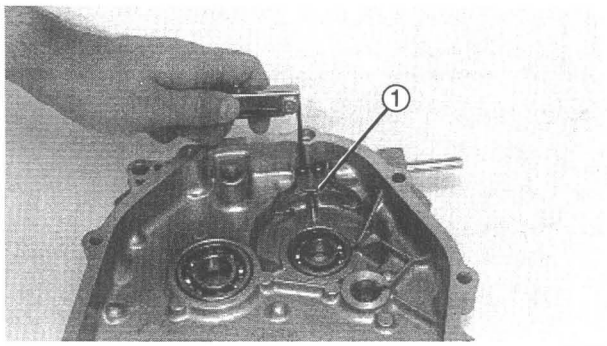

Y-308

10. Remove:
    - Screws
    - Governor fork ①
      from the governor shaft.
11. Pull the governor shaft from the transmission case (Left).

INSPECTION

1. Inspect:
   - Gears
     Damage/Wear → Replace.
   - Bearings
     Pitting/Damage → Replace.
   - Oil seals
     Wear/Damage → Replace.
   - Transmission cases
     Cracks/Damage → Replace.
2. Inspect:
   - Counter gear (Reverse) ①
   - Dog clutch ②
   - Counter gear (Forward) ③
     Wear/Cracks/Damage → Replace.
   - Dog clutch
     Damage → Replace.

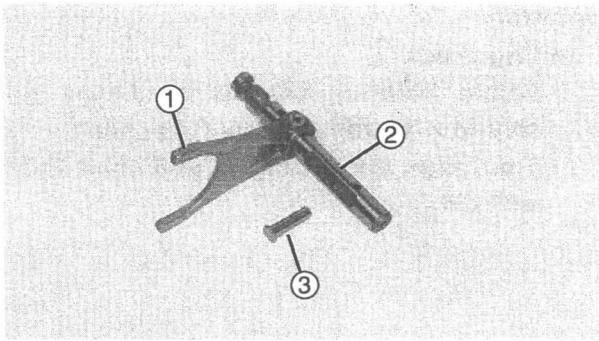

Y-309

3. Inspect:
   - Shift fork ①
   - Guide bar ②
   - Pin ③

   Wear/Damage → Replace.

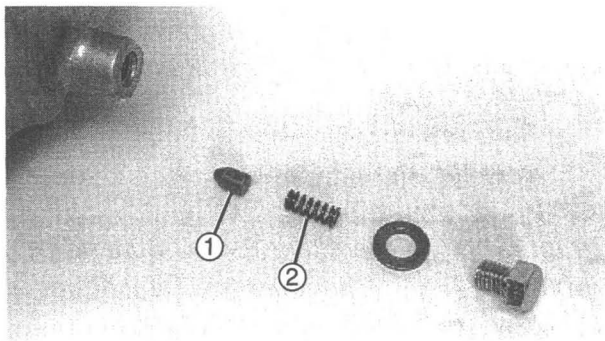

Y-310

4. Inspect:
   - Pin ①
   - Spring ②

   Wear/Damage → Replace.

ASSEMBLY

Reverse the "DISASSEMBLY" procedure.
Note the following points.

1. When installing the governor fork onto the governor shaft, apply LOCTITE® to the holding screws.
2. Install the governor fork onto the governor shaft.

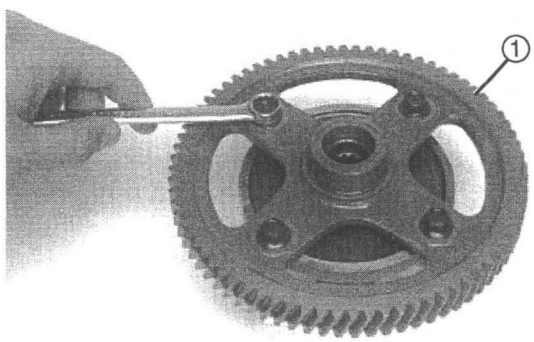

Y-306

3. Install:
   - Differential case assembly
   - Bolts
   - Ring gear ①
   - Dowel pins

Bolt (Differential Case):
34 Nm (3.4 m • kg, 24 ft • lb)
LOCTITE®

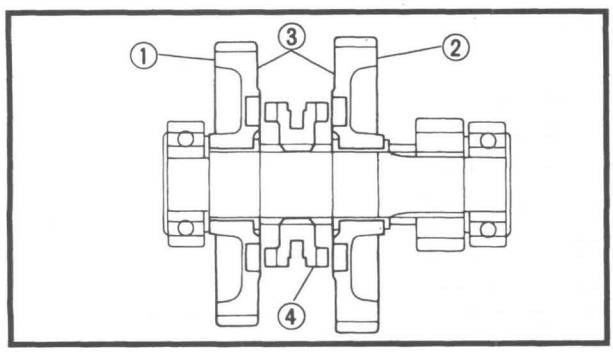

4. Make sure that the counter gears (Reverse ① and Forward ②)are installed on the counter shaft with the flush side ③ facing the dog clutch ④ .

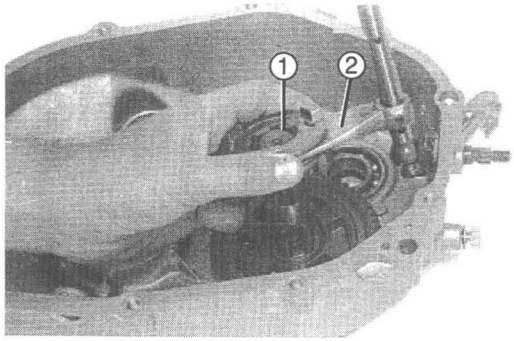

Y-311

5. Install:
   - Dog clutch ①
     Before installing the clutch, engage the shift fork ② with groove of the clutch.
     Then align the slot of the shift shaft lever with pin.

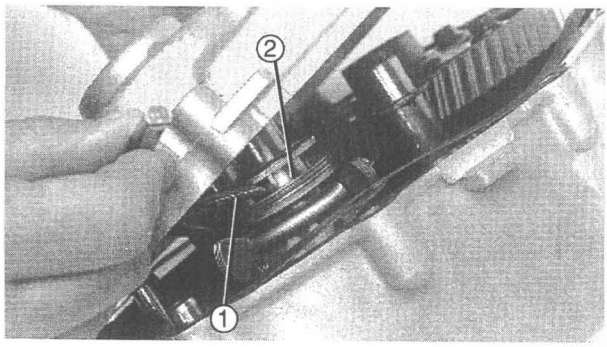

Y-312

6. Install:
   - Dowel pins
   - Gasket (New)
   - Transmission case (Right)
     onto the left transmission case.

NOTE:

When installing the transmission case (Right), make sure that the governor fork ① is fit in the groove ② of the lifter in the speed limiter.

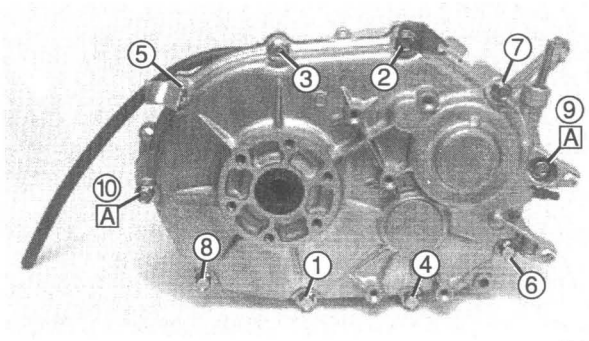

Y-303

7. Tighten:
   - Bolts (Transmission case)
     Tighten them in the tightening sequence shown in the photo.

	**Transmission Case:** **First: 20 Nm (2.0 m • kg, 14 ft • lb)** **Final: 25 Nm (2.5 m • kg, 18 ft • lb)**

[A] LONGER BOLTS WITH DOWEL PINS

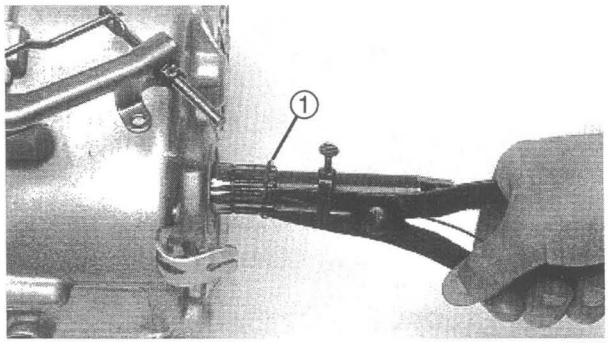

Y-313

8. Install:
   - Speed limiter lever
     onto the governor shaft.
   - Circlip ①
     onto the input shaft.

INSTALLATION

Reverse the "REMOVAL" procedure.
Note the following points.

1. Connect:
   - Shifting cables ① (with lever ②)
     onto shift shaft.

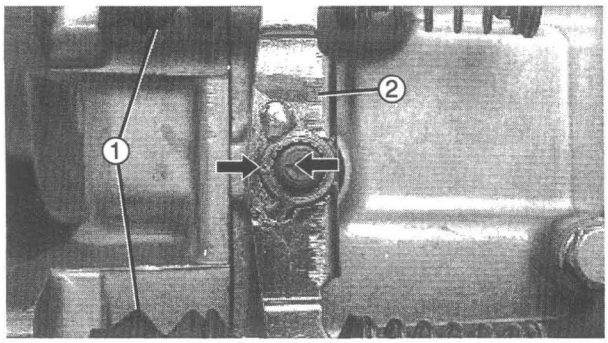

Y-314

NOTE:

Align the match marks on the lever and shaft.

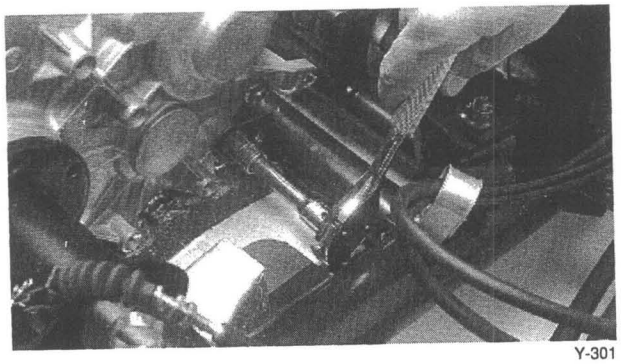
Y-301

2. Install:
   - Transmission case assembly
   - Case mounting bolt (finger tight)

NOTE:
Do not tighten the mounting bolt until axle housing assembly bolts are in place.

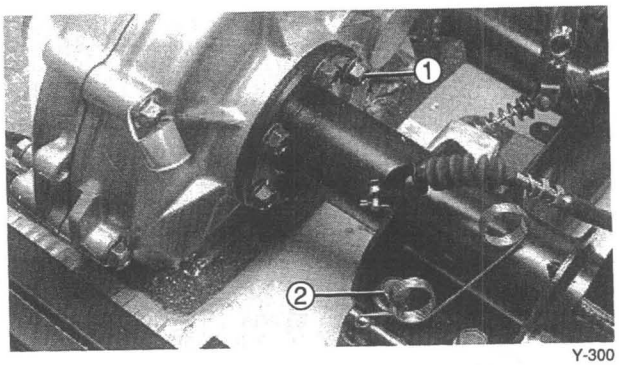

Y-300

3. Install:
   - Axle housing assemblies.

Case Mounting Bolt:
40 Nm (4.0 m • kg, 29 ft • lb)
Transmission Case - Axle Housing ①:
25 Nm (2.5 m • kg, 18 ft • lb)
Axle Housing - Rear Arm ②:
64 Nm (6.4 m • kg, 46 ft • lb)

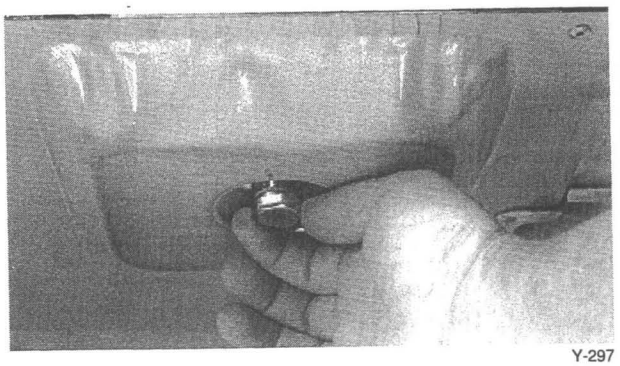
Y-297

4. Remove:
   - Transmission case vent cap
5. Tighten:
   - Drain plug

Drain Plug:
29 Nm (2.9 m • kg, 21ft • lb)

6. Fill:
   - Transmission case

Recommended Oil:
SAE 90 gear oil
Oil Quantity:
800 cc (0.70 Imp qt, 0.85 US qt)

7. Install:
   - Vent cap
8. Connect:
   - Throttle cables onto speed limiter.
9. Adjust:
   - Throttle cable free play
     Refer to CHAPTER 2 "THROTTLE CABLE ADJUSTMENT" section.

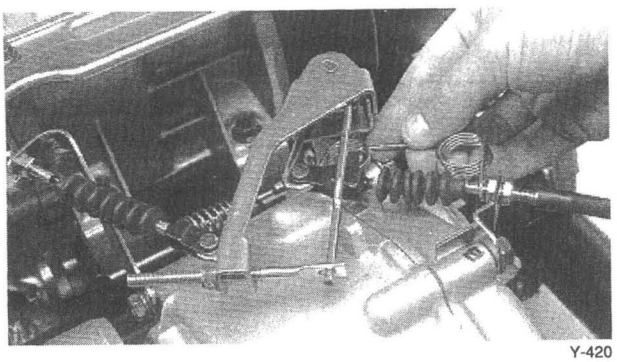
Y-420

POWER TRAIN FOR G14-E

TRANSMISSION

① Circlip
② O-ring
③ Bearing
④ Input shaft
⑤ Bearing
⑥ Case ass'y
⑦ Blind plug
⑧ Circlip
⑨ O-ring
⑩ Bearing
⑪ O-ring
⑫ Counter gear ass'y
⑬ Bearing
⑭ Ring gear
⑮ Differential ass'y
⑯ Bearing holder
⑰ Transmission case cover
⑱ Hexagon nut
⑲ Rear axle hub
⑳ Circlip
㉑ Bearing
㉒ Circlip
㉓ Oil seal
㉔ Rear axle shaft

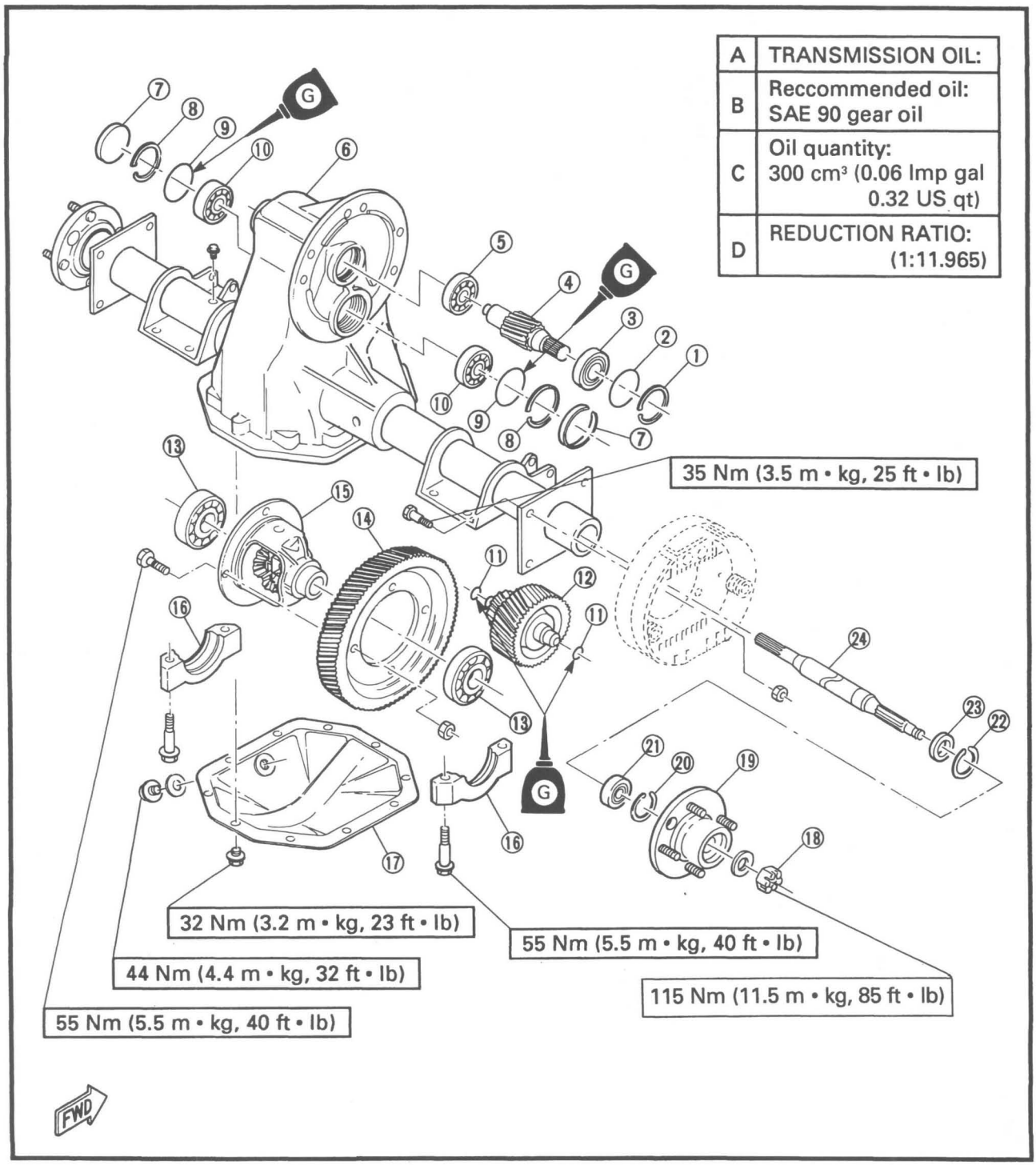

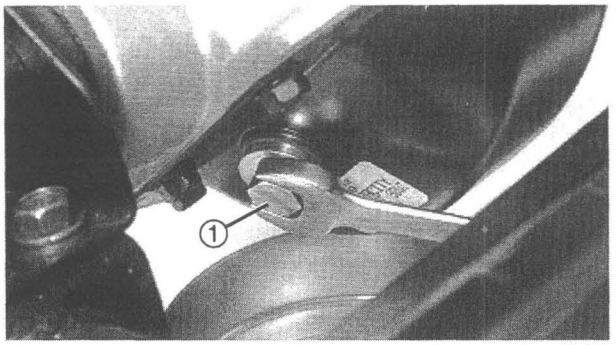

Y-315

REMOVAL

1. Place an oil pan under the transmission case.
2. Remove:
   - Drain plug ①
     Drain the transmission oil.

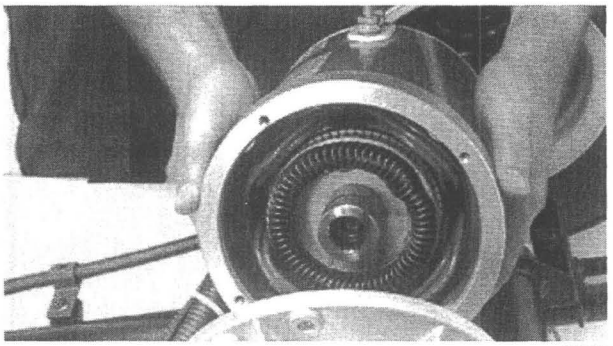
Y-316

3. Jack up the rear of the vehicle, place a stand under the frame. Block the front wheel.
4. Remove:
   - Rear wheels
   - Rear axle shafts
   - Refer to CHAPTER 3 "REAR AXLE WHEEL FOR G14-E, REMOVAL" section.
5. Remove:
   - Rear shock absorbers

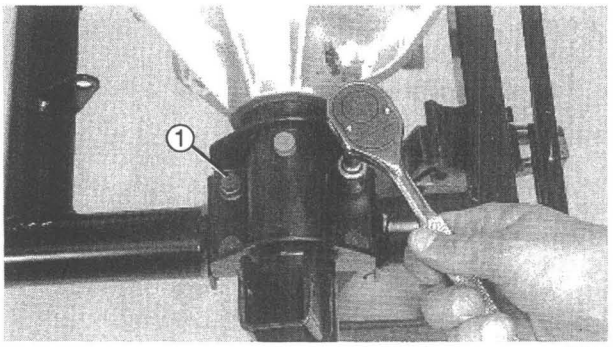

Y-317

6. Remove:
   - Bolts ①
     from the rear arm.
7. Remove:
   - Transmission case assembly

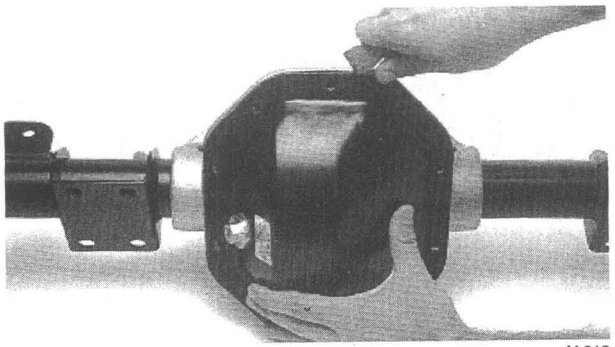
Y-318

DISASSEMBLY

1. Remove:
   - Bolts
   - Transmission case cover using a putty knife.

CAUTION

Use care not to damage the case sealing surface or deform the transmission case cover.

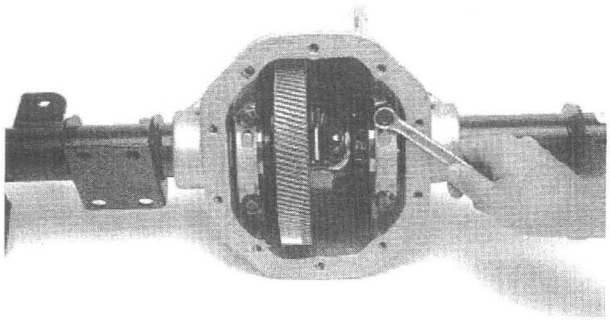
Y-319

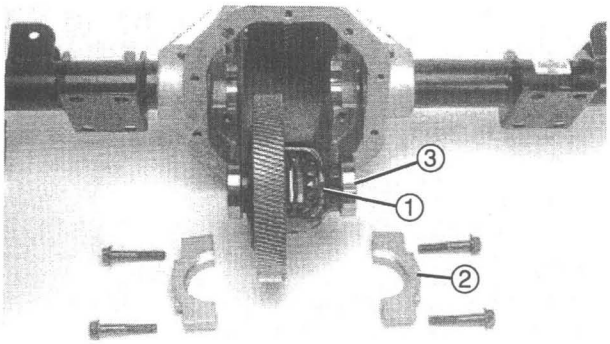

Y-320

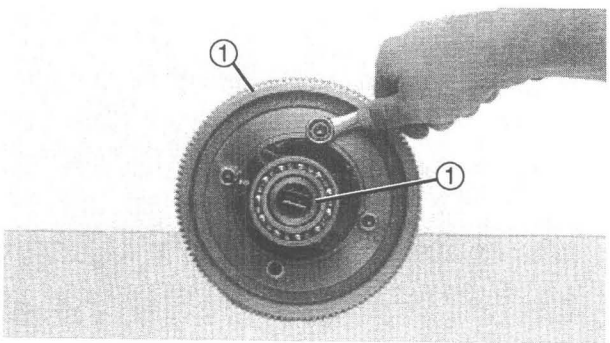

Y-321

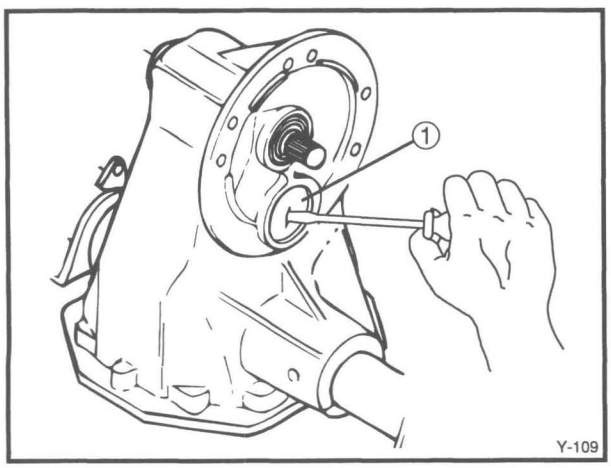

Y-109

2. Remove:
   - Differential bearing holder bolts

CAUTION

Mark bearing holders before removal so they can be returned to their original position - bearing holders are not interchangeable.

- Differential assembly with ring gear ①
- Bearing holder ②
- Bearing ③

3. Separate:
   - Ring gear ①
   - Differential assembly ②

4. Remove:
   - Blind plug ① (both sides

NOTE:

Punch or drill near the center of blind plug. Insert a suitable sized sheet metal screw until the plug is forced out of the bearing bore.

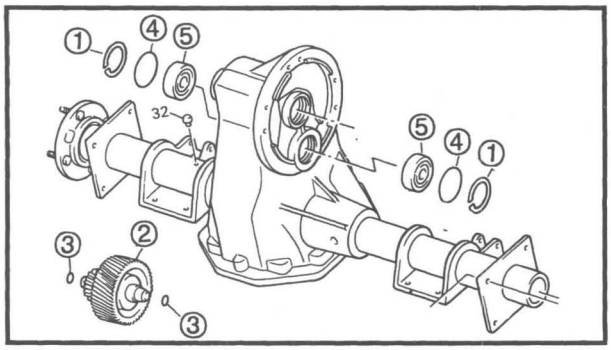

5. Remove:
   - Circlip ①
     (from counter gear bore)
   - Counter gear ②
   - O-ring of counter gear ③
   - O-ring of bearing ④
   - Bearing ⑤

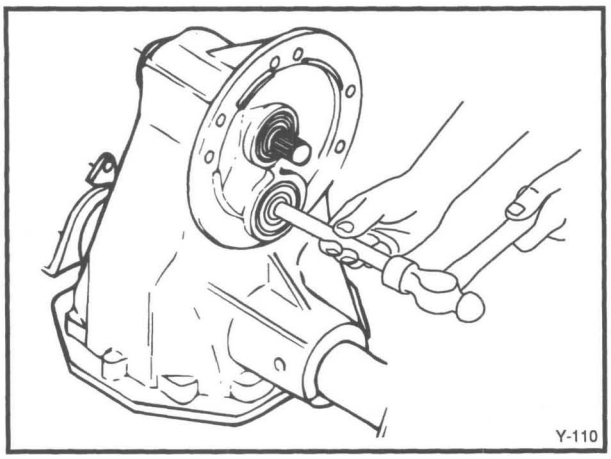

Counter gear removal steps:

1. Push out the counter gear shaft of input side from bearing inner race.
2. Remove the bearing of input side using the bearing puller.
3. Repeat the step 1 for counter gear bearing on opposite side.

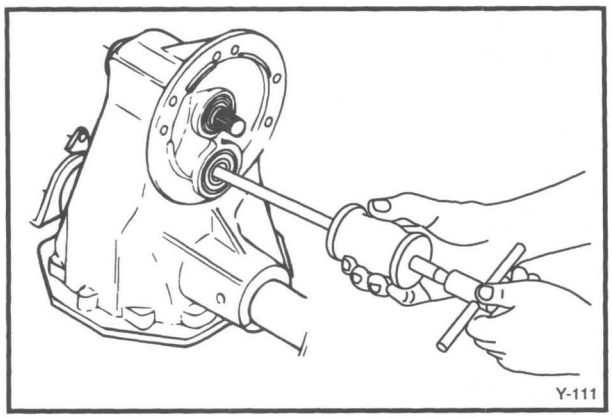

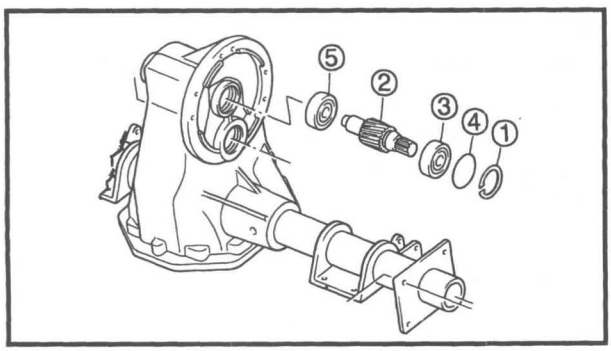

6. Remove:
   - Circlip ①
   - Input shaft ②
   - Bearing ③
   - O-ring ④
   - Bearing ⑤

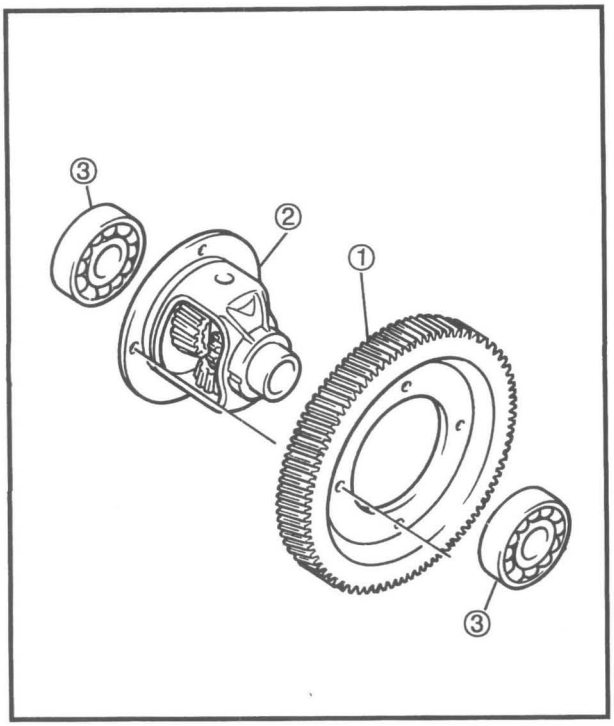

INSPECTION

1. Inspect:
   - Ring gear ①
   - Differential gear ②
     Damage Wear → Replace
   - Bearing ③
     Pitting/Damage → Replace
   - O-ring
     Wear/Damage → Replace

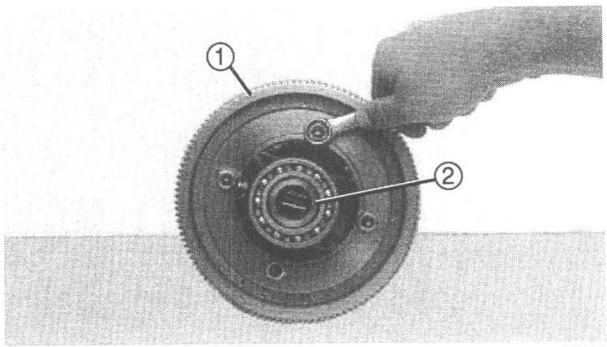

Y-321

ASSEMBLY

Reverse the "DISASSEMBLY" procedure. Note the following points.

1. Tighten:
   - Differential case bolts attaching ring gear ① to differential assembly ②.

	Differential Case Bolts: **55 Nm (5.5 m • kg, 40 ft • lb)**

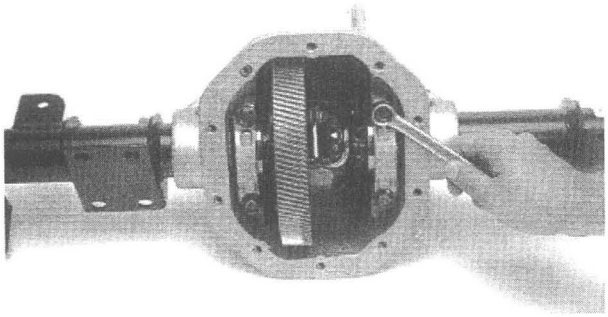
Y-319

2. Tighten:
   - Differential bearing holder bolts

CAUTION

Differential bearing holders must be installed in their original locations.

	Differential Bearing Holder Bolts: **55 Nm (5.5 m • kg, 40 ft • lb)**

NOTE:
Clean the transmission case surface.

3. Apply:
   - RTV Quick Gasket sealant (ACC-11001-05-01) or Three bond 1215 (to the case surface and into the 10 bolt holes)

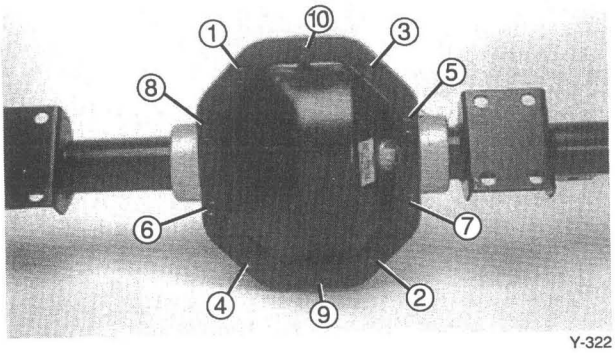

Y-322

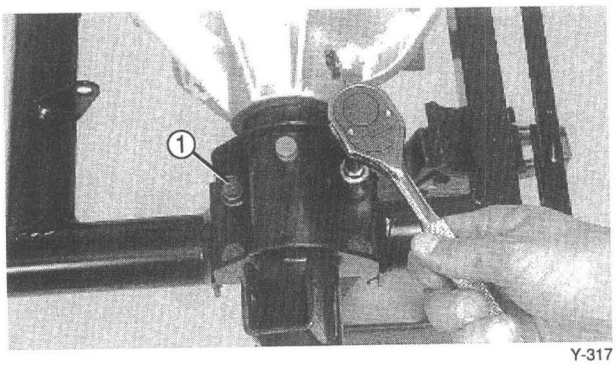

Y-317

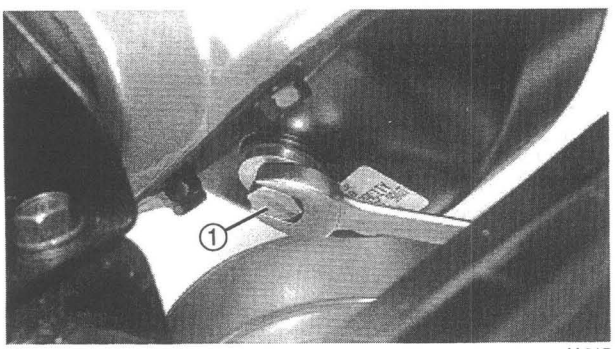

Y-315

4. Tighten:
   - Transmission case bolts

NOTE:
Tighten the bolt in order starting with the smallest number and torque the bolts in two stage.

Transmission Case Bolts:
32 Nm (3.2 m • kg, 23 ft • lb)

INSTALLATION

Reverse the "Removal" procedure.
Note the following points.

1. Install:
   - Transmission case assembly
   - Rear arm bolts ①

Axel Housing - Rear Arm ①:
64 Nm (6.4 m • kg, 46 ft • lb)

2. Install:
   - Traction motor
     Refer to CHAPTER 7 "TRACTION MOTOR" section.
   - Rear shock absorbers

Shock Absorber Pivot Bolt:
(Upper and Lower)
32 Nm (3.2 m • kg, 23 ft • lb)

   - Rear axle shafts
     Refer to CHAPTER 3 "REAR AXLE WHEEL FOR G14-E, REMOVAL" section.
   - Rear wheels

Rear Wheel:
90 Nm (9.0 m • kg, 65 ft • lb)

3. Tighten:
   - Drain plug ①

Drain Plug ①:
44 Nm (4.4 m • kg, 32 ft • lb)

4. Fill:
   - Transmission case

Recommended Oil:
SAE 90 gear oil
Oil Capacity:
300 cc (0.26 Imp qt, 0.32 US qt)

CHAPTER 5
ENGINE OVERHAUL

ENGINE OVERHAUL

ENGINE REMOVAL

NOTE:

It is not necessary to remove the engine in order to remove the following components:

- Cylinder head assembly
- Carburetor
- Starter-generator
- Primary sheave

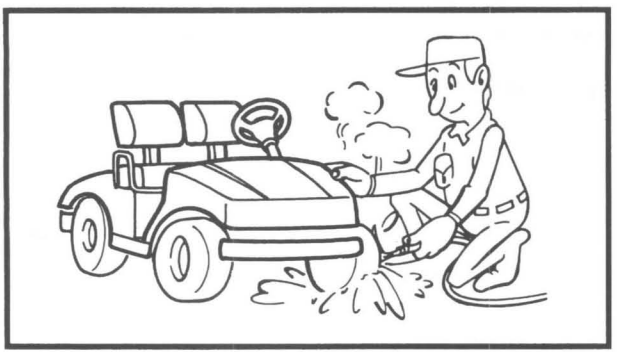

PREPARATION FOR REMOVAL

1. Remove all dirt, mud, dust, and foreign material before removal and disassembly.

2. Use proper tools and cleaning equipment. Refer to CHAPTER 1 "SPECIAL TOOLS".

CAUTION

Make sure all traces of cleaner are removed before engine is reassembled. Engine oil can be adversely affected by even small amounts of cleaner.

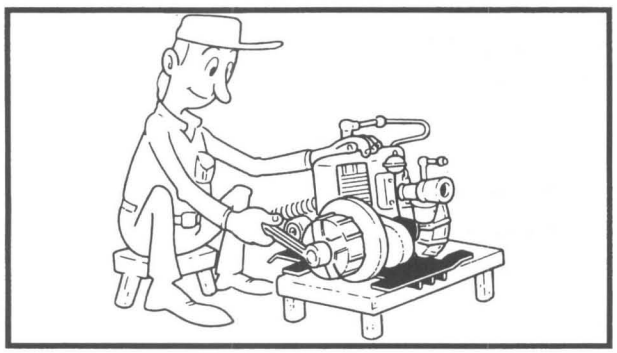

NOTE:

When disassembling the engine, keep mated parts together. This includes gears, cylinders, pistons, and other parts that have been "mated" through normal wear. Mated parts must be reused as an assembly or replaced.

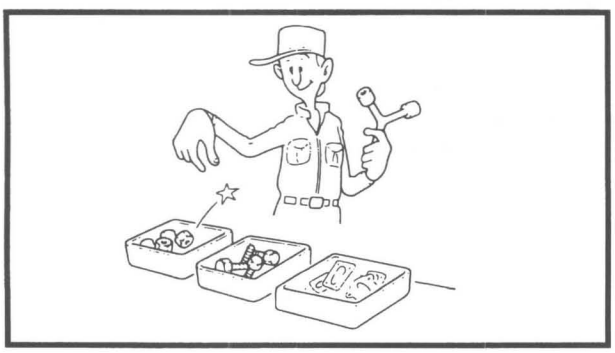

3. During the engine disassembly, clean all parts and place them in trays in the order of disassembly. This will speed up assembly time and help assure that all parts are correctly reinstalled in the engine.
4. Disconnect the battery negative lead.
5. Drain the engine oil completely.
   Refer to CHAPTER 2 "ENGINE OIL REPLACEMENT" section.

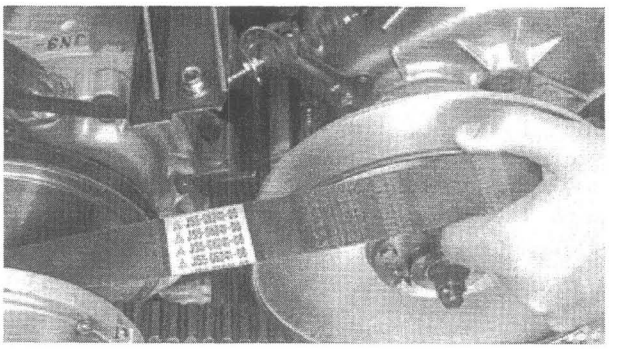
Y-323

DRIVE BELT

1. Remove:
   - Drive belt
     Refer to CHAPTER 2 "DRIVE BELT INSPECTION" section.

⚠ WARNING

Gasoline may be present in the carburetor and fuel system. Use care during engine removal not to spill gasoline. Gasoline is extremely flammable, and its vapors can explode if ignited.

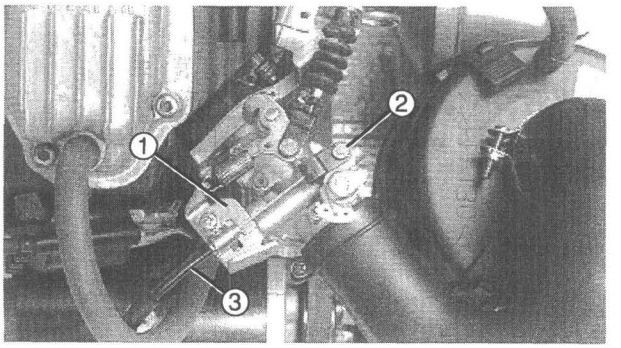

Y-324

CARBURETOR

1. Disconnect:
   - Fuel hose
2. Remove:
   - Anti-tamper plate
   - Choke cable clamp ①
3. Remove:
   - Cotter pin
     From clevis pin ② .
   - Clevis pin
   - Choke cable ③
4. Remove:
   - Circlip ①
   - Cotter pin ②
   - Clevis pin ③
   - Throttle cable ④

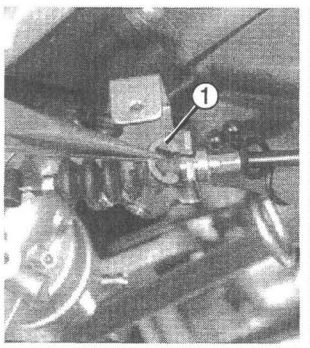

Y-325

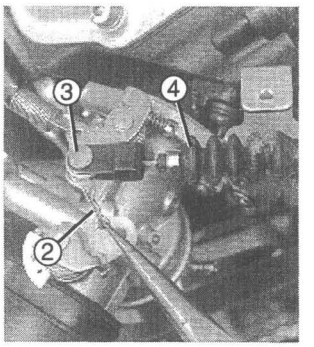

Y-326

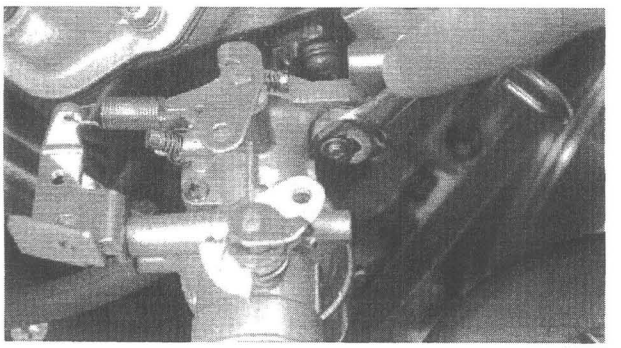
Y-327

5. Remove:
   - Carburetor joint
6. Remove:
   - Carburetor body holding nuts
   - Carburetor assembly
   - Gasket
   - Intake manifold holding screws
   - Intake manifold and gasket

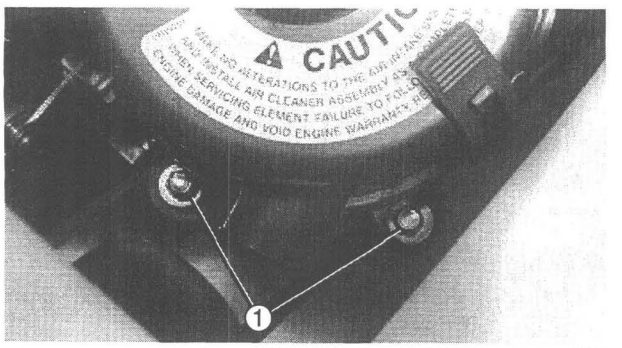

Y-328

AIR CLEANER CASE

1. Disconnect:
   - Breather hose
2. Remove:
   - Air cleaner case holding bolts ①
   - Air cleaner case

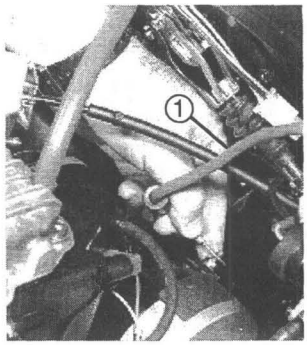

Y-329

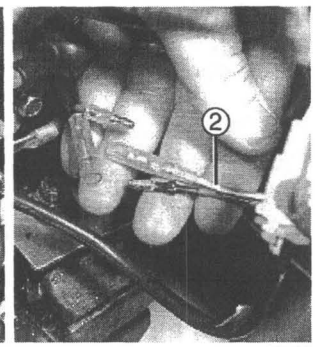

Y-330

WIRING AND HOSE

1. Disconnect:
   - Starter-generator lead to relay (Red) ①
   - Starter-generator lead to neg battery post (Black)
   - Starter-generator lead to fuse (Black)
   - Starter-generator charging coil leads (Red, Green) ②

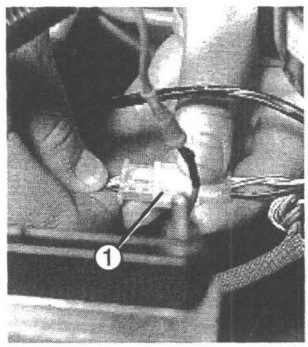

Y-331

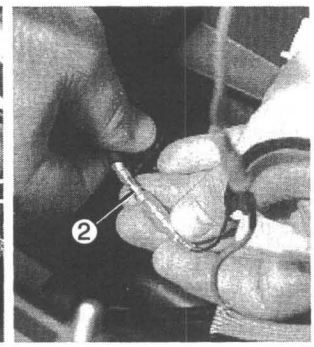

Y-332

2. Disconnect:
   - Pickup coil lead (White/Red, White/Black, Black) ①
   - Oil level switch lead (Yellow) ②

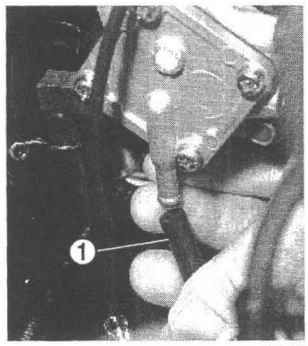

Y-333

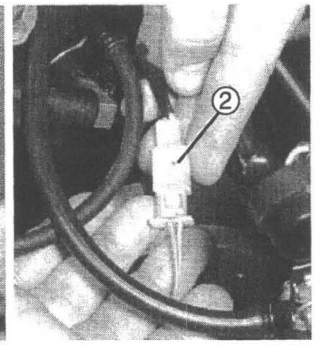

Y-334

3. Disconnect:
   - Pulser hose ①
     From fuel pump.
   - Ignition coil lead (Red/White, Orange) ②

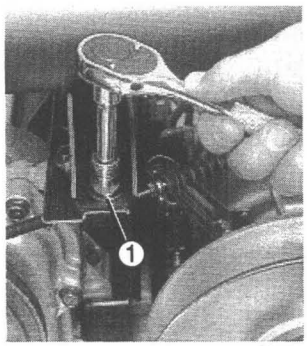

Y-335

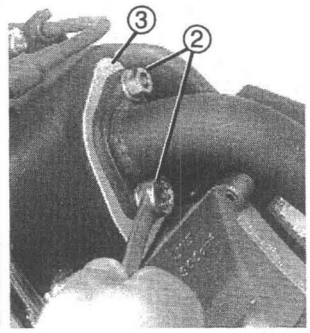

Y-336

MUFFLER

1. Remove:
   - Exhaust pipe holding nuts ①
   - Muffler mount bolts ②
   - Gasket ③

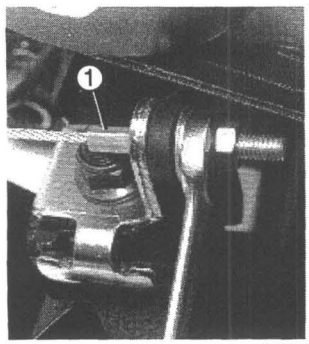

Y-337

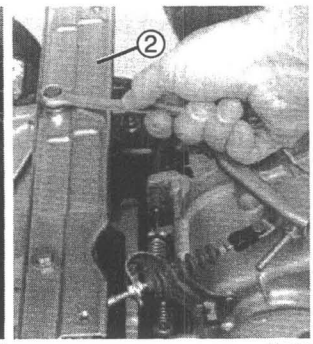

Y-338

ENGINE REMOVAL

1. Disconnect:
   - Engine bracket tensioner cable ①
2. Remove:
   - Muffler stay ②

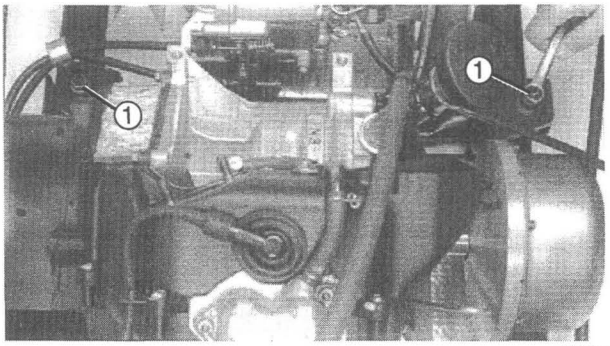

Y-339

3. Remove:
   - Engine mount nuts ①
   - Engine (with starter-generator)

NOTE:
The engine with starter-generator attached weighs approximately 85-90 lbs.

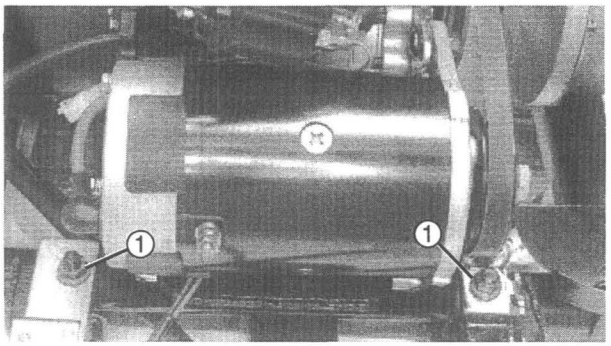

Y-340

ENGINE DISASSEMBLY

STARTER-GENERATOR

NOTE:
With the engine mounted, the starter-generator can be maintained by removing the following parts.
- Air cleaner case

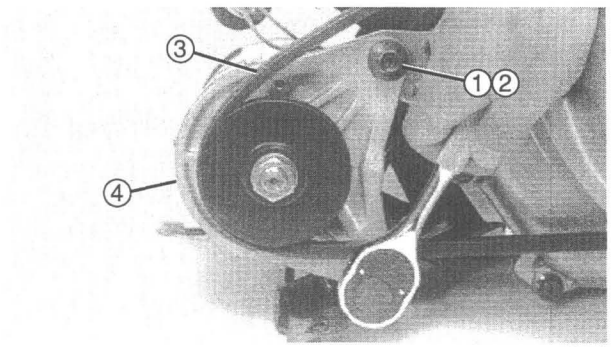

Y-341

1. Remove:
   - Bolts and nuts ① ②
   - V-belt ③
   - Starter-generator ④

AIR SHROUD

NOTE:
With the engine mounted, the air shroud can be maintained by removing the following parts.
- Muffler

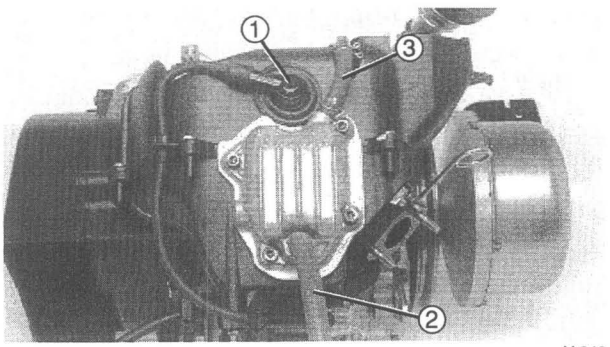

Y-342

1. Disconnect:
   - Plug cap ①
   - Crankcase breather hose ②
   - Oil delivery hose ③

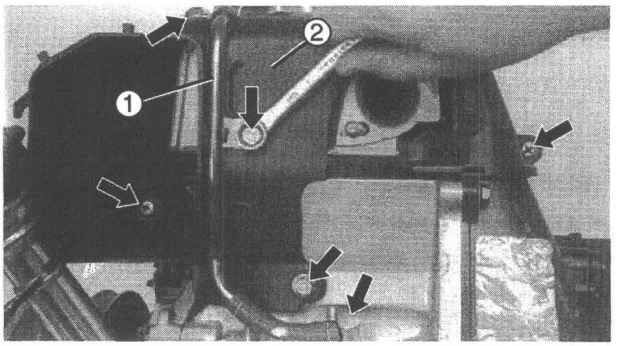

Y-343

2. Remove:
   - Oil delivery hose ①
   - Air shroud (Rear) ②
     From exhaust side.

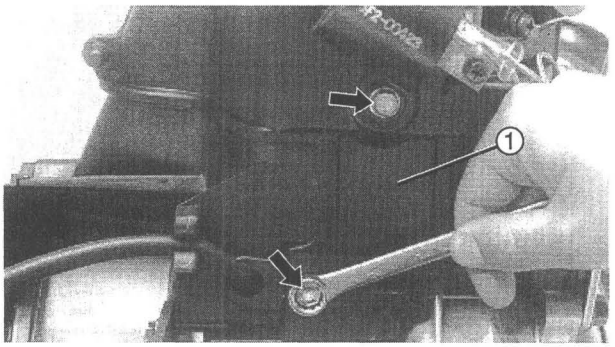

Y-344

3. Remove:
   - Air shroud (Front) ①
     From engine intake side.
     Remove shroud with ignition coil.

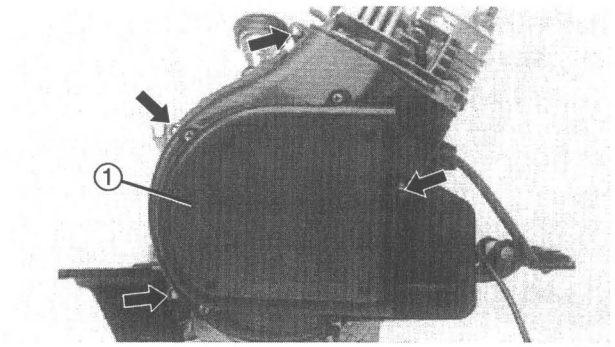

Y-345

4. Remove:
   - Air shroud (Side) ①
     From engine right side.

CYLINDER HEAD

NOTE:

With the engine mounted, the cylinder head can be maintained by removing the following parts.

- Muffler
- Carburetor
- Air shroud

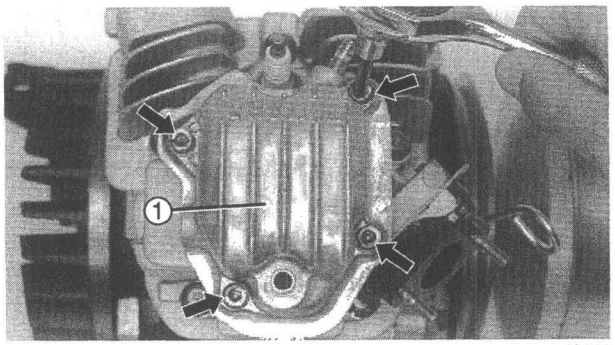

Y-346

1. Remove:
   - Cylinder head cover ①
   - Spark plug
2. Place the piston at TDC on the compression stroke so that both valves are closed.
   Refer to CHAPTER 2 "VALVE CLEARANCE ADJUSTMENT" section.

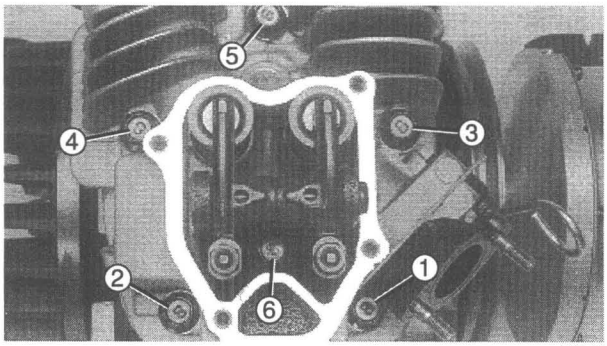

Y-347

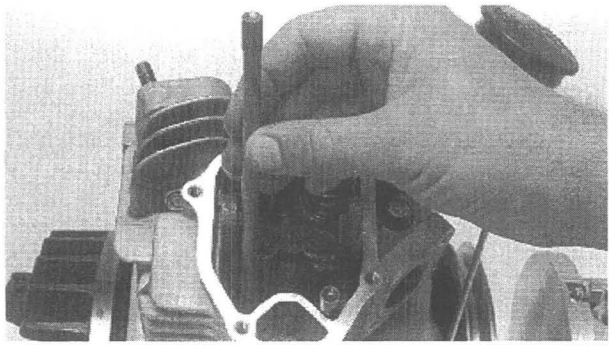
Y-348

3. Remove:
   - Cylinder head bolts
   - Cylinder head
   - Push rods (Exhaust/Intake)

NOTE:
- Loosen nuts in numbered order in photo. Start by loosening each nut 1/2 turn until all are loosen.
- Mark both push rods so they can be reinstalled in their original locations.

PRIMARY SHEAVE

1. Remove:
   - Sheave cap

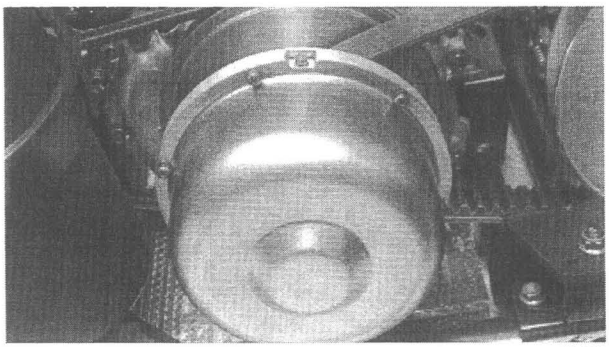
Y-349

2. Remove:
   - Sheave securing bolt ①
     Use a Primary Sheave Holder ②.

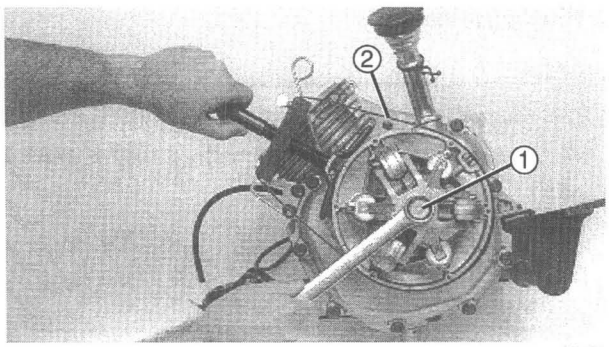

Y-350

	Primary Sheave Holder: **YS-1880-A, 90890-01701**

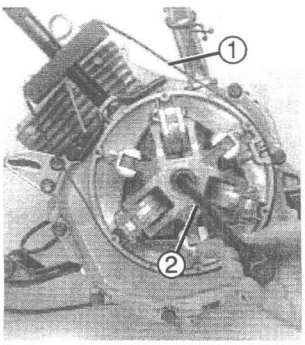

Y-351

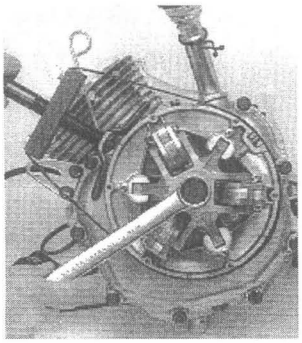
Y-352

3. Remove:
   - Primary sheave assembly
     Use a Sheave Holder ① and Primary Sheave Puller ② .

	Primary Sheave Holder: **YS-1880-A, 90890-01701** **Primary Sheave Puller:** **YG-1876, 90890-01876**

FLYWHEEL (Cooling Fan)

NOTE:

With the engine mounted, the flywheel can be maintained by removing the following parts.

- Muffler
- Fuel tank
- Air shroud

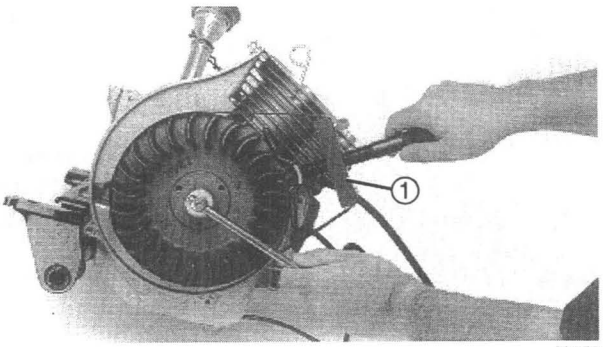

Y-353

1. Remove:
   - Flywheel securing bolt
     Use a Sheave Holder ①.

	Primary Sheave Holder: **YS-1880-A, 90890-01701**

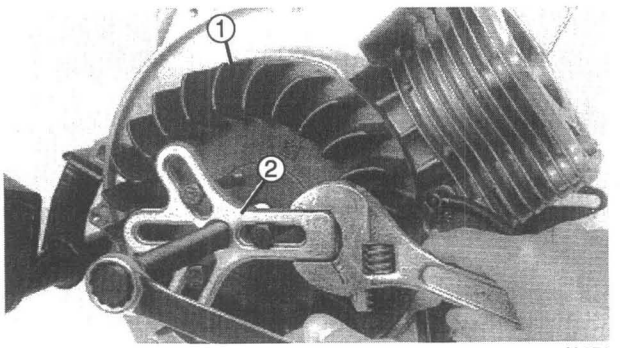

Y-354

2. Remove:
   - Flywheel ①
     Use a Universal Puller ②.

	Universal Puller: **YU-33270-B, 90890-01362**

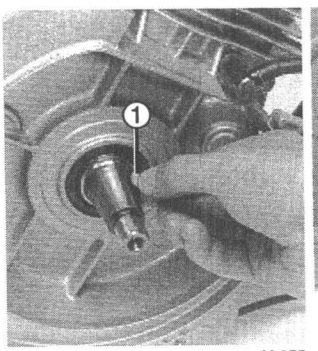

Y-355

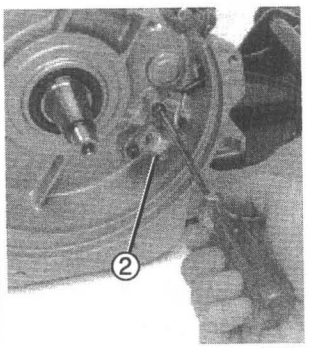

Y-356

3. Remove:
   - Woodruff key ①
   - Pickup coil ②

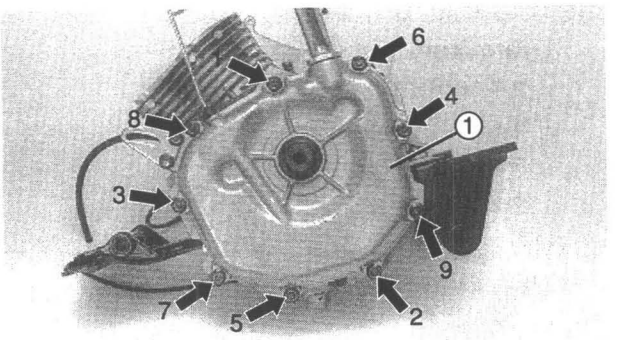

Y-357

CRANKCASE COVER

1. Remove:
   - Left crankcase cover ①

NOTE:

Numbers shown indicate proper tightening sequence.

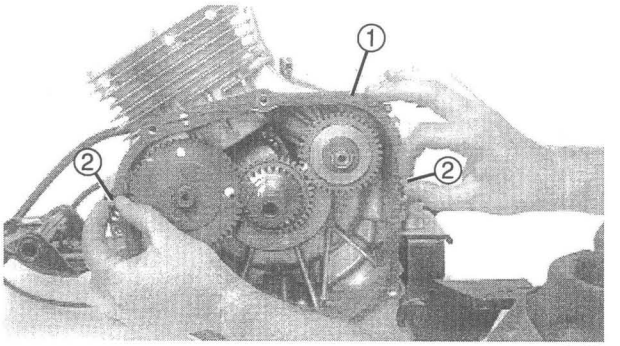

Y-358

2. Remove:
   - Gasket ①
   - Dowel pins ②

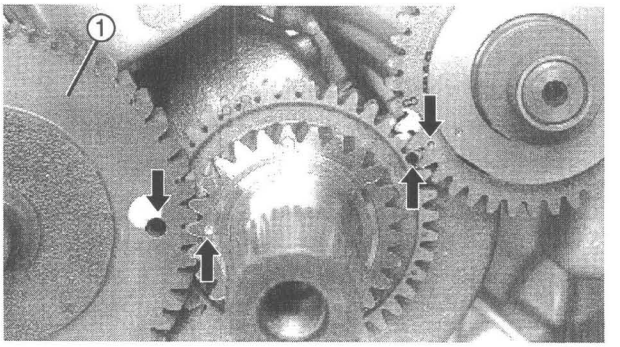

Y-359

CAMSHAFT

1. Remove:
   - Camshaft ①

NOTE:
Before removing the camshaft, place the engine with its left-side up to prevent the tappets from falling out.

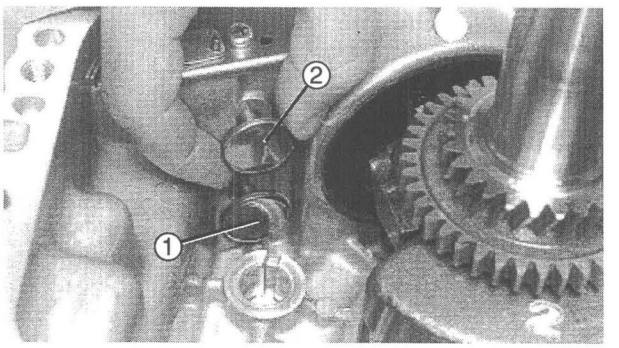

Y-360

2. Remove:
   - Tappets (Exhaust ① /Intake ②)

NOTE:
Mark both tappets so they can be reinstalled in their original guide hole.

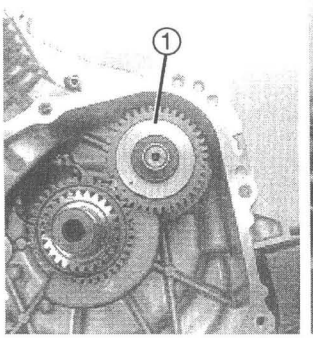

Y-361

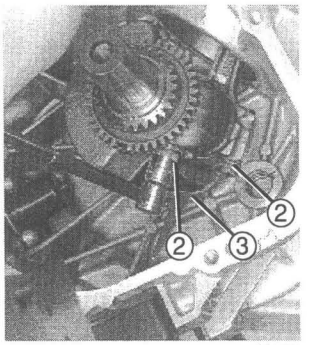

Y-362

BALANCER SHAFT AND CRANKSHAFT

1. Remove:
   - Balancer shaft ①

2. Remove:
   - Connecting rod securing nuts ② (with Oil splasher ③)
   - Connecting rod cap
   - Bolts
   - Crankshaft

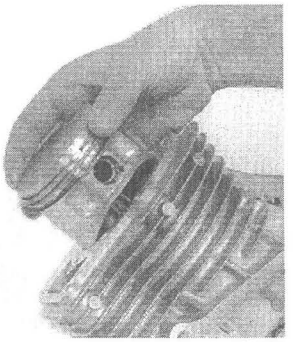
Y-363

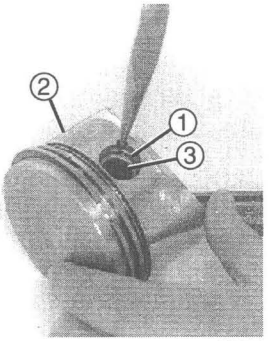

Y-364

PISTON AND CONNECTING ROD

1. Remove:
   - Connecting rod (With piston)
   - Piston pin clips ①
   - Piston pin ③
   - Piston ②

NOTE:
If there is a carbon ridge at the top of the cylinder, remove it before removing piston.

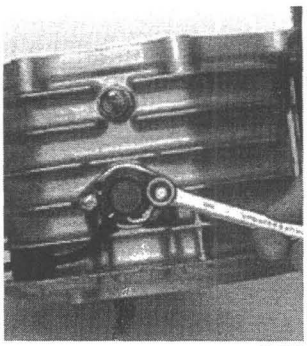
Y-365


Y-366

ENGINE BRACKET

1. Remove:
   - Engine bracket
   - Oil level switch
     From crankcase.

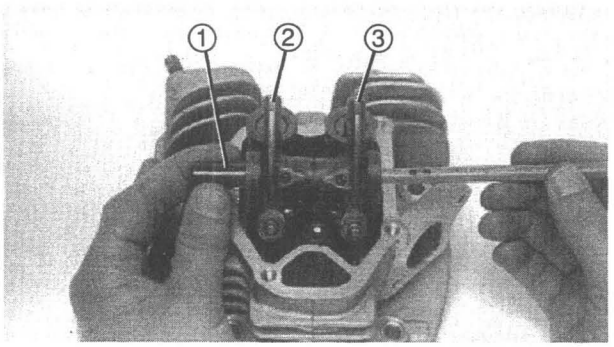

Y-416

INSPECTION AND REPAIR

CYLINDER HEAD

1. Remove:
   - Rocker arm shaft ①
   - Rocker arm (Exhaust) ②
   - Rocker arm (Intake) ③

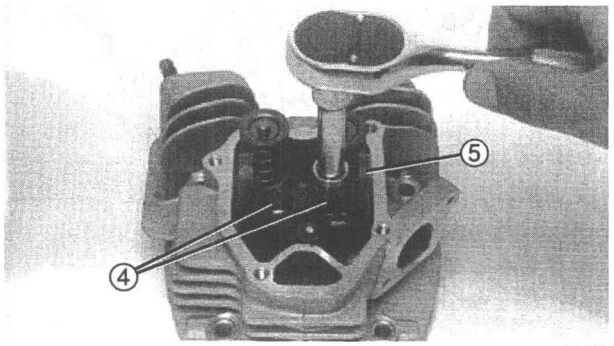

Y-417

2. Remove:
   - Bolts ④
   - Rocker arm shaft support ⑤
   - Dowel pins

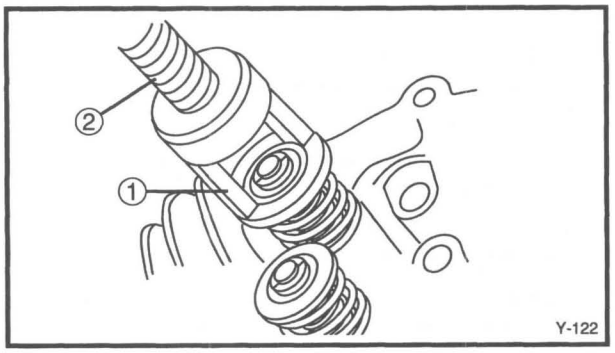

Y-122

3. Attach:
   - Adapter ①
   - Valve Spring Compressor ②

Valve Spring Compressor:
YM-1253, 90890-01253

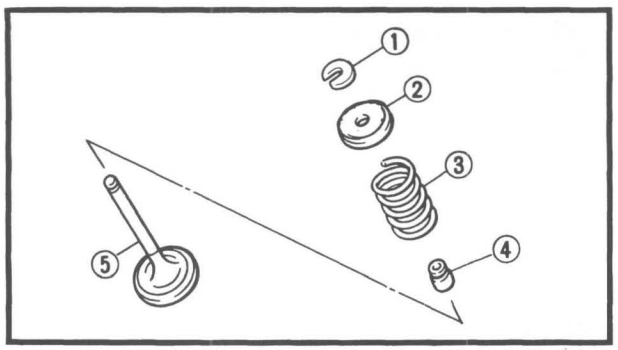

4. Remove:
   - Valve retainer ①
     Use magnet or tweezers.
   - Valve spring seat (Upper) ②
   - Valve spring ③
   - Oil seal ④
   - Valve (Intake) ⑤

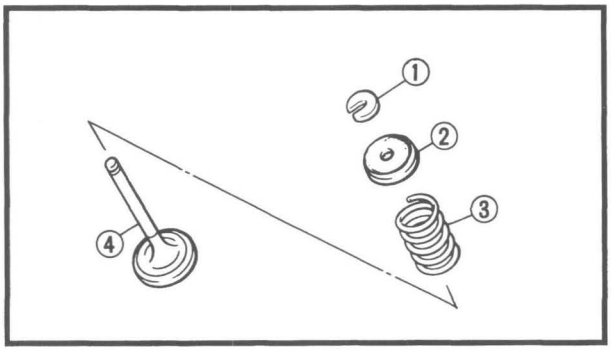

5. Remove:
   - Valve retainer ①
     Use magnet or tweezers.
   - Valve spring seat (Upper) ②
   - Valve spring ③
   - Valve (Exhaust) ④

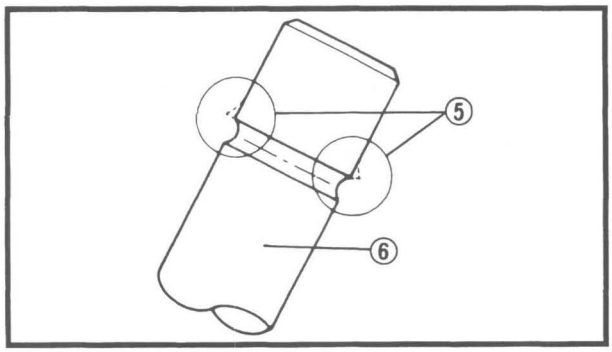

NOTE:

Deburr ⑤ any deformed valve stem ⑥ end. Use an oil stone to smooth the stem end.

6. Remove:
   - Carbon deposit.
     Use rounded scraper.

NOTE:

Do not use a sharp instrument and avoid damaging or scratching:
- Spark plug threads
- Valve seat
- Cylinder head

7. Measure:
   - Cylinder head warpage
     Out of specification → Resurface.

NOTE:

Check cylinder head for flatness by laying it on a surface plate and using a 0.002 in. feeler gauge between the mating surfaces to detect any warpage.

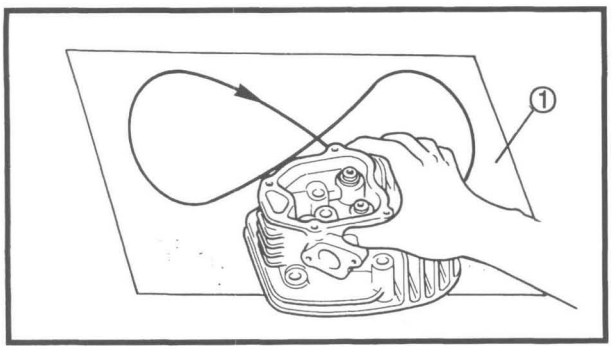

Cylinder Head Warp Limit:
Less than 0.05 mm (0.002 in)

① Emery paper (400 ~ 600 grit wet)

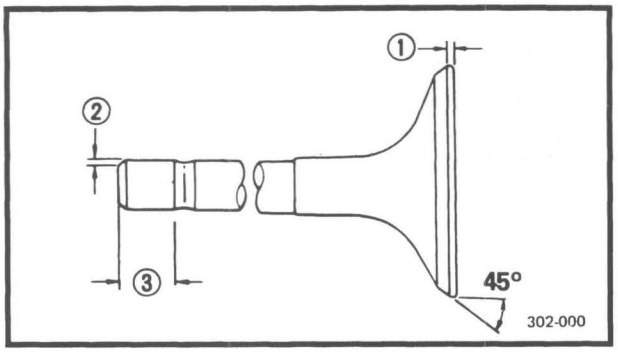

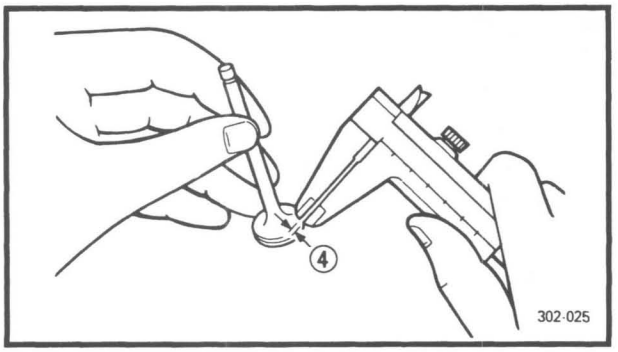

VALVE

1. Inspect:
   - Valve face
   - Stem end

   Wear/Pitting → Reface.
   Out of specification → Replace.

Margin Thickness (Service limit) ① :
Intake 0.8 mm (0.031 in)
Exhaust 0.6 mm (0.024 in)

Beveled ② :
0.5 mm (0.020 in)

Minimum Length (Service limit) ③ :
4.8 mm (0.189 in)

Seat Width (Valve face) ④ :
1.4 mm (0.055 in)

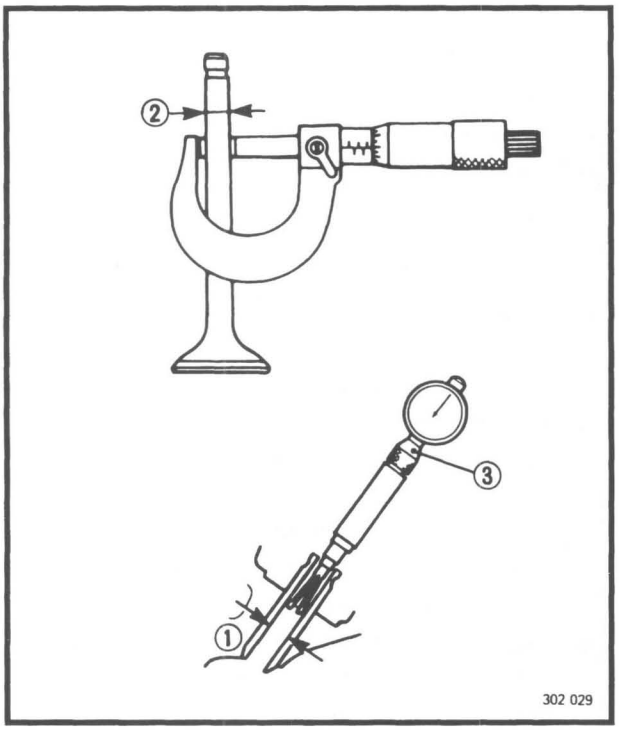

2. Measure:
   - Valve stem clearance

Valve stem clearance =
Valve guide inside diameter ① – Valve stem diameter ②

Out of specification → Replace either valve and/or guide.
Use a Micrometer and Bore Gauge ③ .

	Valve Stem. Clearance	Maximum
Intake	0.037 ~ 0.067 mm (0.0015 ~ 0.0026 in)	0.11 mm (0.043 in)
Exhaust	0.030 ~ 0.060 mm (0.0012 ~ 0.0024 in)	0.11 mm (0.0043 in)

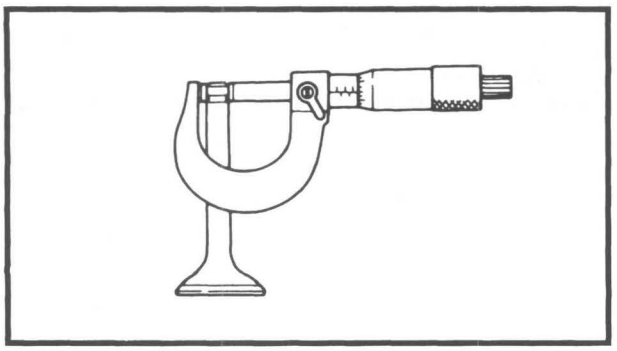

3. Inspect:
   - Valve stem end

   Mushroom shape/Larger diameter than rest of stem → Replace valve, valve guide, and oil seal.

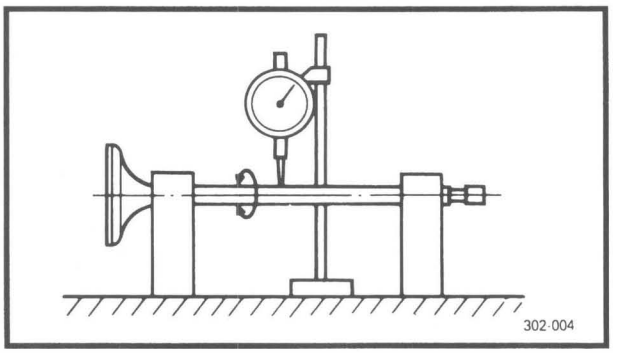

4. Measure:
   - Valve stem runout
     Out of specification → Replace.

Maximum Runout:
0.02 mm (0.0008 in)

VALVE SEAT

1. Clean:
   - Valve face
   - Valve seat
     Remove carbon deposit.
2. Inspect:
   - Valve seat
     Pitting/Wear → Reface valve seat.

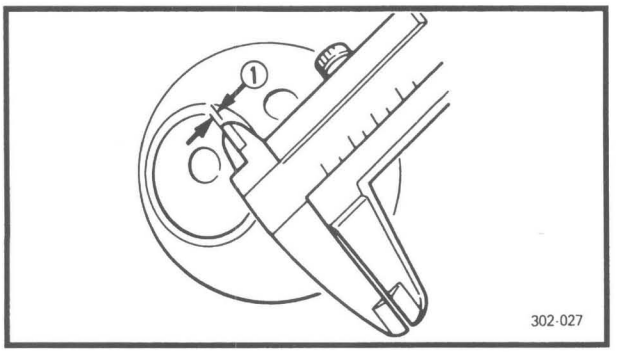

3. Measure:
   - Valve seat width ①
     Out of specification → Reface valve seat.

Valve Seat Width:
Std: 0.7~ 0.9 mm
(0.028 ~ 0.035 in)
Wear Limit:
1.4 mm (0.055 in)

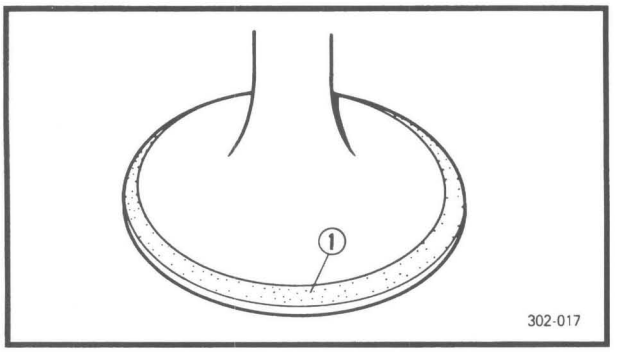

Valve seat width measurement steps:
- Apply Mechanic's bluing dye (Dykem) ① to the valve face.
- Install the valve into the cylinder head.
- Press the valve through the valve guide and onto the valve seat to make a clean pattern.
- Measure the valve seat width. Wherever the valve seat and valve face made contact, bluing will have been removed from valve face.
- If the valve seat width on valve face is too wide or too narrow, or seat is not centered, the valve seat must be refaced.

4. Reface:
   - Valve seat
     Use 10°, 45° and 60° Valve Seat Cutter.

CAUTION

Remove just enough material to achieve satisfactory seat.
When twisting cutter, apply light downward pressure with finger tips on each end of T-bar, and twist one direction evenly to prevent chatter marks.

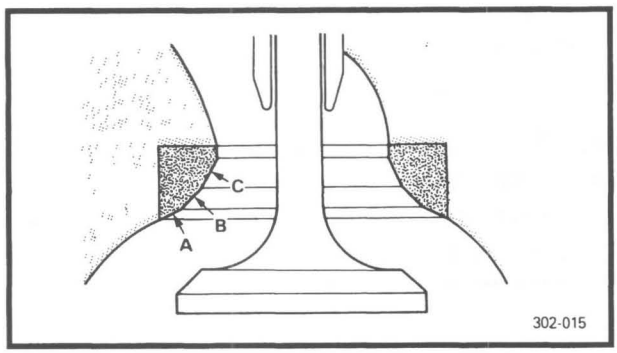

Cut sections as follows	
Section	**Cutter**
A	10°
B	45°
C	60°

A

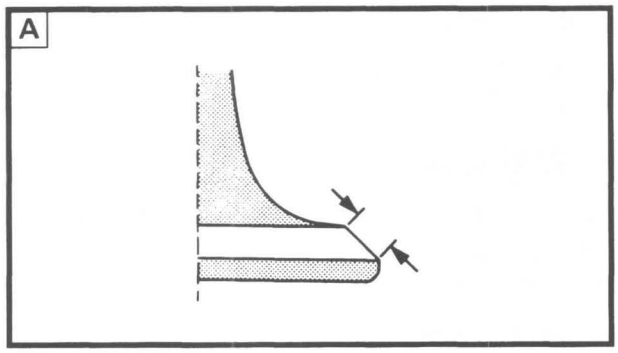

B

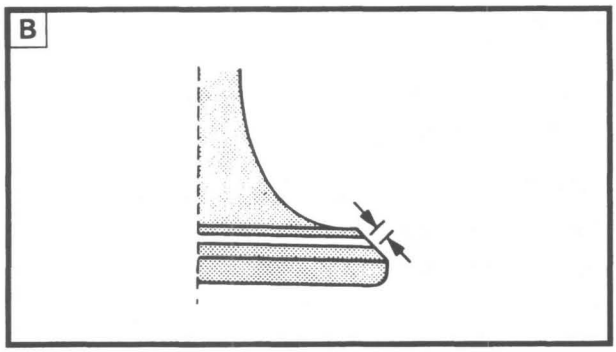

C

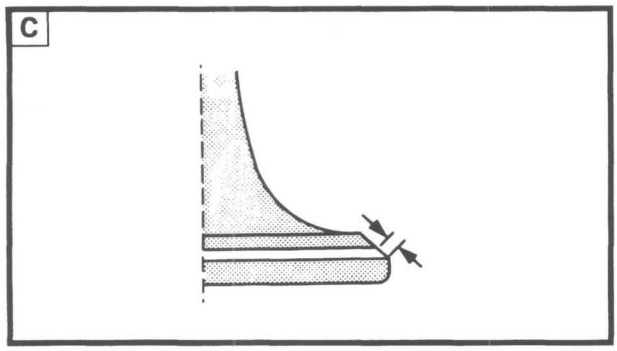

Valve seat refacing steps:

A Valve face indicates that valve seat is centered on valve face but is too wide.

Valve Seat Cutter Set		Desired Result
Use lightly	10° cutter	To reduce valve seat width to 1.0 mm (0.04 in)
	60° cutter	

B Valve seat is in the middle of the valve face but too narrow.

Valve Seat Cutter Set		Desired Result
Use	45° cutter	To achieve a uniform valve seat width of 1.0 mm (0.04 in)

C Valve seat is too narrow and right up near valve margin.

Valve Seat Cutter Set		Desired Result
Use	10° cutter	To center the seat and to achieve its width of 1.0 mm (0.04 in)
	45° cutter	

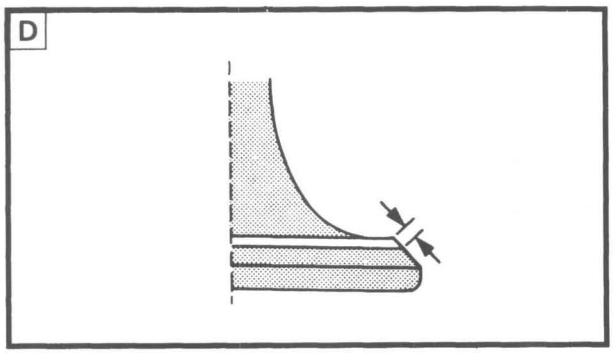

D	Valve seat is too narrow and is located down near the bottom edge of the valve face.	
Valve Seat Cutter Set		**Desired Result**
Use	**60° cutter, first**	**To center the seat and increase its width.**
	45° cutter	

5. Lap:
   - Valve face
   - Valve seat

NOTE:

After refacing the valve seat or replacing the valve and valve guide, the valve seat and valve face should be lightly lapped.

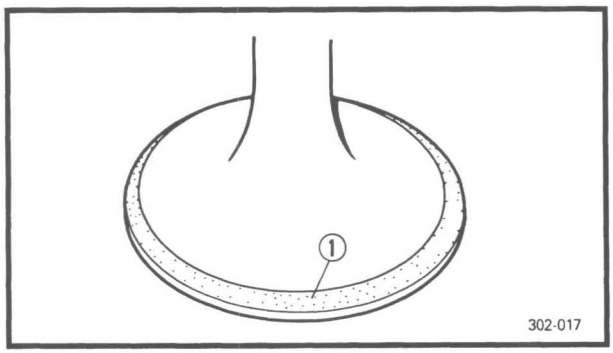

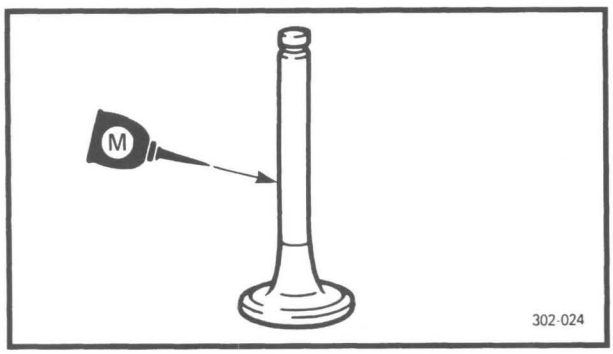

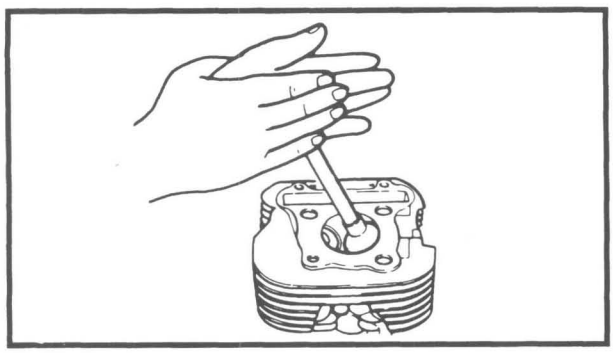

Valve lapping steps:

- Apply a fine lapping compound ① to the valve face.

CAUTION

Be sure no compound enters the gap between the valve stem and guide.

- Apply a molybdenum disulfide oil to the valve stem.
- Install the valve into the cylinder head.
- Turn the valve until the valve face and valve seat are evenly polished, then clean off all compound.

NOTE:

To obtain the best lapping result, lightly tap the valve seat while rotating the valve back and forth between your hand.

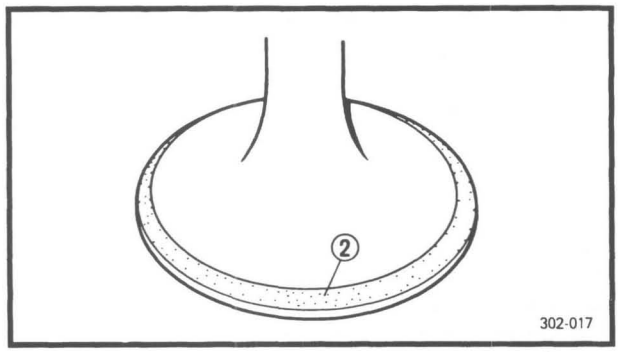

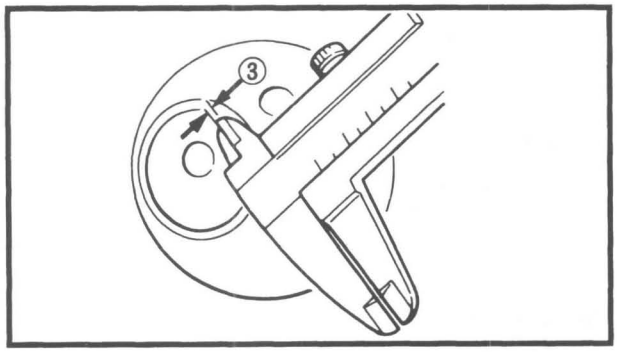

NOTE:

Be sure to clean off all compound from the valve face and valve seat after every lapping operation.

- Apply the Mechanic's bluing dye (Dykem)② to the valve face.
- Install the valve into the cylinder head.
- Press the valve through the valve guide and onto the valve seat to make a clear pattern.
- Measure the valve seat width ③ again. If the valve seat width is out of specification, reface and lap the valve seat.

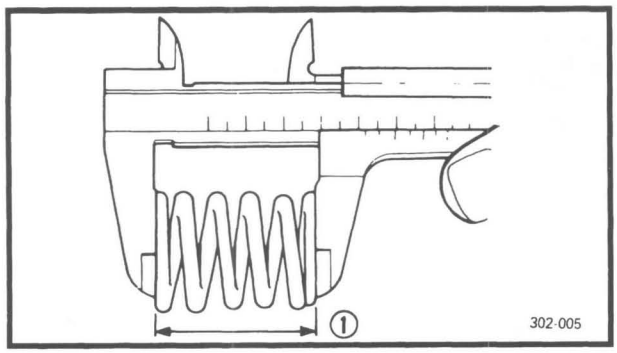

VALVE SPRING

1. Measure:
   - Spring free length ①
     Out of specification → Replace.

Valve Spring Free Length Limit (IN/EX):
35.0 mm (1.38 in)

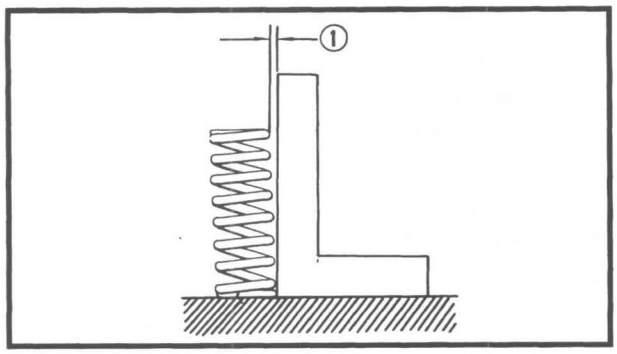

2. Measure:
   - Spring tilt ①
     Out of specification → Replace.

Tilt Limit:
2.5° or 1.6 mm (0.063 in)

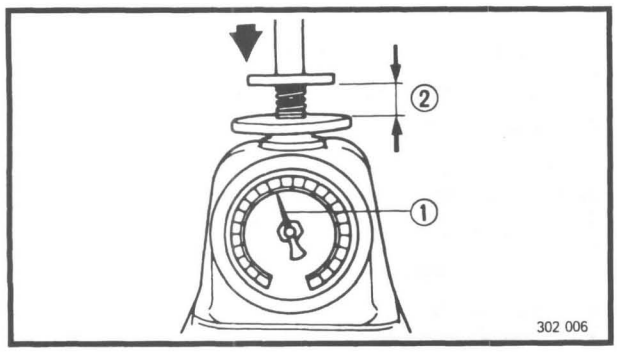

3. Measure:
   - Spring force (Installed length)
     Out of specification → Replace.

Valve Compressed Force Limit:
8.0 kg (17.6 lb)①/
29 mm (1.14 in) ②

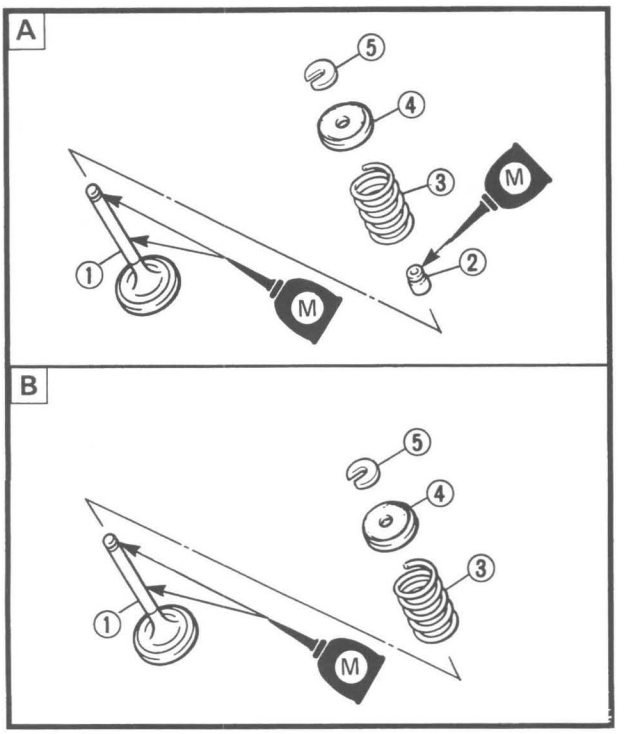

VALVE INSTALLATION

1. Lubricate
   - Valve stem
   - Oil seal
   - Valve stem end

High-Quality Molybdenum Disulfide Motor Oil or Molybdenum Disulfide Grease.

2. Install:
   - Valve ①
   - Oil seal ②
   - Valve spring ③
   - Valve spring seat ④ (Upper)
   - Valve retainer ⑤

   Use the Valve Spring Compressor.

[A] INTAKE
[B] EXHAUST

Valve Spring Compressor: YM-1253, 90890-01253

3. Check:
   - Valve sealing

   Leakage at valve seat → Reface, relap or replace valve.

   Refer to "VALVE SEAT".

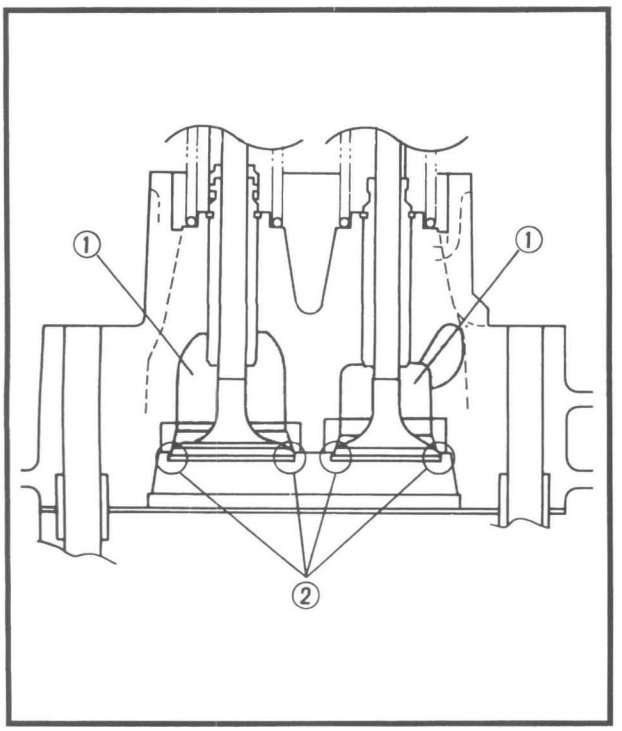

Valve seat checking steps:
- Pour a clean solvent ① into the intake and exhaust ports.
- Check the valve sealing, there should be no leakage at the valve seat ②.

Relapping steps:
- Disassemble head parts.
- Repeat lapping steps using fine lapping compound.
- Clean all parts thoroughly.
- Reassemble and check for leakage again using solvent.
- Repeat steps as often as necessary to effect a satisfactory seal.

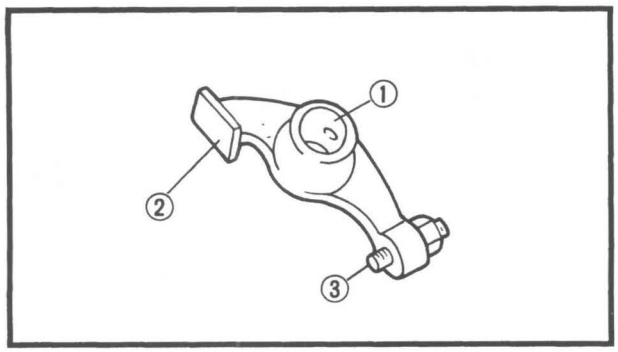

ROCKER ARM

1 .Inspect:
- Rocker arm shaft hole ①
- Valve contact surface ②
- Adjuster surface ③

  Wear/Pitting/Scratches/Blue discoloration → Replace.

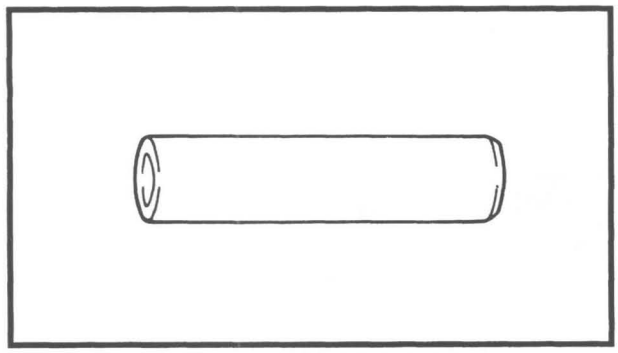

2. Inspect:
- Rocker arm shaft

  Groove can be felt (bearing surface), Blue discoloration (rocker arm shaft) → Replace then inspect lubrication system.

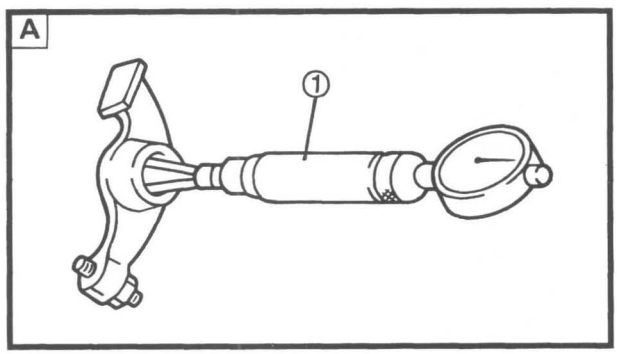

3. Measure:
- Rocker arm inside diameter [A]

  Use a Bore gauge ① .

  Out of specification → Replace.

Rocker Arm Inside Diameter:
12.00 ~ 12.04 mm
(0.472 ~ 0.474 in)

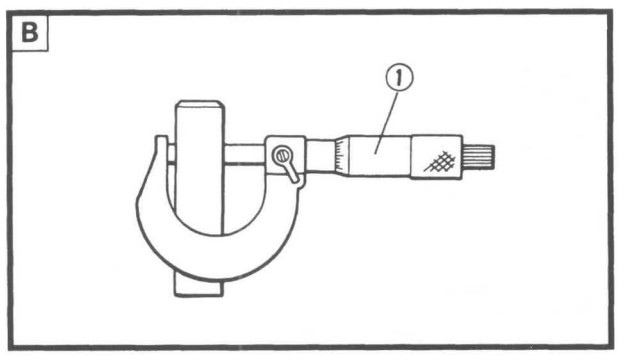

4. Measure:
- Rocker arm shaft outside diameter [B]

  Use a Micrometer ① .

  Out of specification → Replace.

Rocker Arm Shaft Outside Diameter:
11.90 ~ 11.99 mm
(0.469 ~ 0.472 in)

5. Measure:
- Rocker arm/Rocker arm shaft clearance

  Calculate clearance by substracting inside diameter [A] of rocker arm from outside diameter [B] of rocker shaft.

Rocker Arm-Rocker Arm Shaft
Clearance = [A] – [B] :
0.01 ~ 0.07 mm
(0.0004 ~ 0.0028 in)
Limit: 0.14 mm (0.0055 in)

6. Inspect:
   - Rocker arm shaft support hole
     Wear/Pitting/Scratches/Blue discoloration
     → Replace.

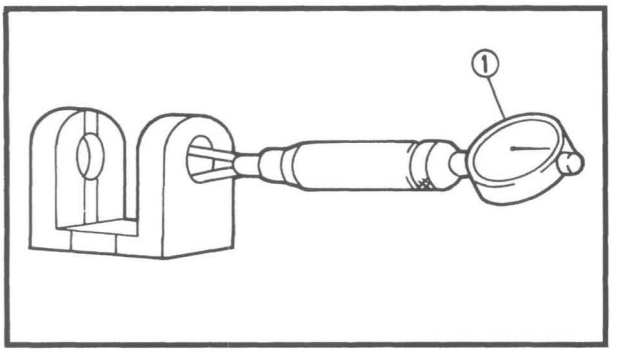

7. Measure:
   - Rocker arm shaft support inside diameter
     Use a Bore Gauge ①.
     Out of specification → Replace.

Rocker Arm Shaft Support Inside Diameter:
12.00 ~ 12.14 mm
(0.472 ~ 0.478 in)
Rocker Arm Shaft-Rocker Arm Shaft Support Clearance:
Limit: 0.24 mm (0.0094 in)

CAMSHAFT

1. Inspect:
   - Cam lobes
     Pitting/Scratches/Blue discoloration
     → Replace.
2. Measure:
   - Cam lobes
     Use Micrometer.
     Out of specification → Replace.

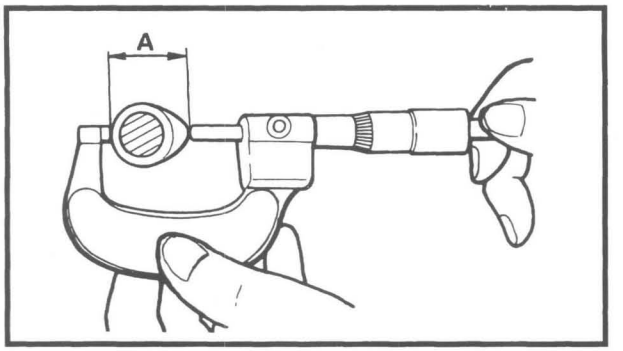

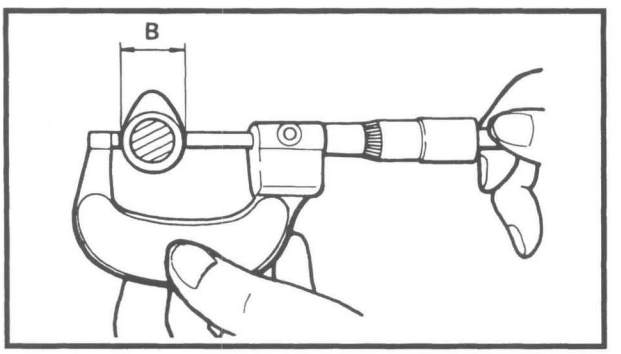

	Cam Lobe "A"	Cam Lobe "B"
Intake	29.16 ~ 29.28 mm (1.148 ~ 1.153 in)	24.11 ~ 24.22 mm (0.949~ 0.954 in)
Exhaust	29.20 ~ 29.32 mm (1.150 ~ 1.154 in)	24.15 ~ 24.25 mm (0.951 ~ 0.955 in)

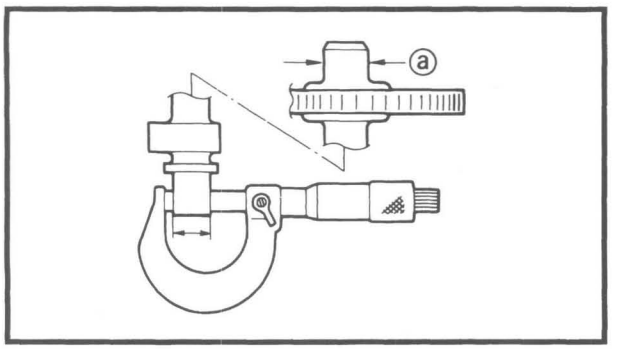

3. Measure:
   - Camshaft bearing surface diameter ⓐ
     Use a micrometer.
     Out of specification → Replace camshaft.
   - Camshaft pivot inside diameter:
     Out of specification → Replace crankcase cover and/or crankcase.

Camshaft Bearing Surface Diameter:
15.90 ~ 15.99 mm
(0.625 ~ 0.630 in)
Camshaft Pivot Inside Diameter:
16.00 ~ 16.05 mm
(0.630 ~ 0.632 in)

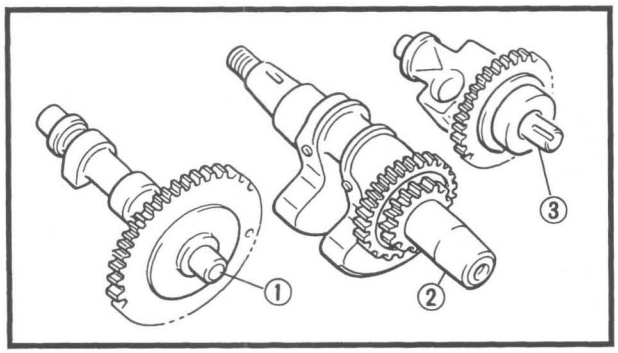

GEARS

1. Inspect:
   - Gear teeth
     Blue Discoloration/Pitting /Wear
     → Replace.

① Camshaft
② Crankshaft
③ Balancer shaft

CYLINDER AND PISTON

1. Inspect:
   - Cylinder and piston walls
     Vertical scratches→ Rebore or replace cylinder and piston.
2. Measure:
   - Piston-to-cylinder clearance

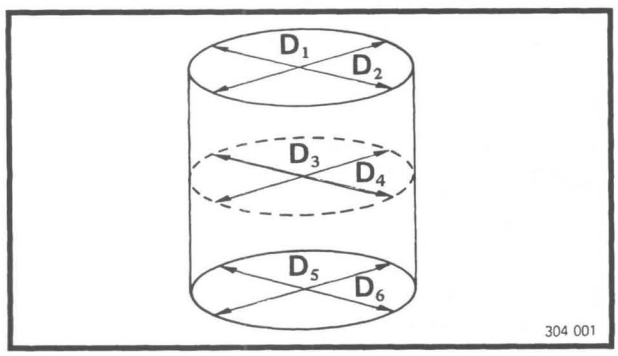

Piston-to-cylinder clearance measurement steps:

First step:

- Measure the cylinder bore "D" with a cylinder Bore Gauge.

NOTE:

Measure the cylinder bore "D" in parallel to and at right angles to the crankshaft. Then, find the average of the measurements.

Cylinder Bore "D":
75.00 ~ 75.02 mm
(2.953 ~ 2.954 in)
< Limit: 75.05 mm (2.955 in)
Taper Limit "T":
0.15 mm (0.006 in)
Out of Round Limit "R":
0.15 mm (0.006 in)

D = Maximum Diameter
T = (Maximum D_1 or D_2) – (Maximum D_5 or D_6)

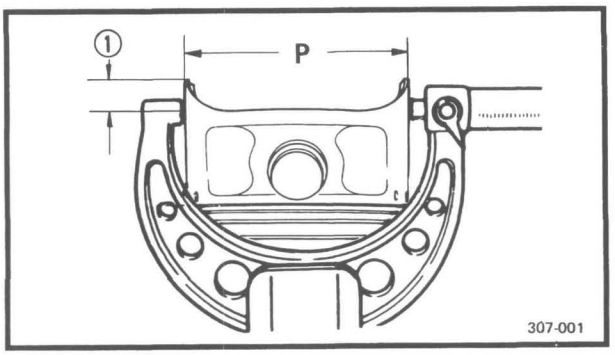

R = (Maximum D_1, D_3 or D_5) – (Minimum D_2, D_4 or D_6)

- If out of specification, rebore or replace the crankcase assembly and replace the piston and piston ring as a set.

Second step:

- Measure the piston skirt diameter "P" with a micrometer.

① 5 mm (0.20 in) from the piston bottom edge

Piston Outside Diameter "P"	
Standard	**74.96 ~ 74.98 (2.953 in)**
Oversize 1	**75.25 mm (2.963 in)**
Oversize 2	**75.50 mm (2.972 in)**

- If out of specification, replace the piston and piston rings as a set.

Third step:

- Calculate the piston-to-cylinder clearance with following formula:

Piston-to-cylinder Clearance = Cylinder Bore "C" – Piston Skirt Diameter "P"

- If out of specification, rebore or replace the crankcase assembly and replace the piston and piston ring as a set.

Piston-to-cylinder Clearance:
0.03 ~ 0.05 mm
(0.0012 ~ 0.0020 in)
< Limit: 0.10 mm (0.0039 in) >

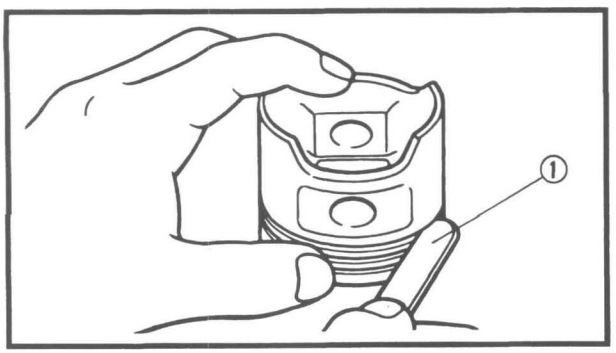

PISTON RING AND PIN

Piston Ring

1. Measure:
   - Side clearance
     Use the Feeler Gauge ①.
     Out of specification → Replace piston and/or rings.

NOTE:

Decarbon the piston ring grooves and rings before measuring the side clearance.

	Side Clearance	
	Standard	Limit
Top Ring	0.03 ~ 0.05 mm (0.001 ~ 0.002 in)	0.07 mm (0.003 in)
2nd Ring	0.03 ~ 0.07 mm (0.001 ~ 0.003 in)	0.09 mm (0.004 in)

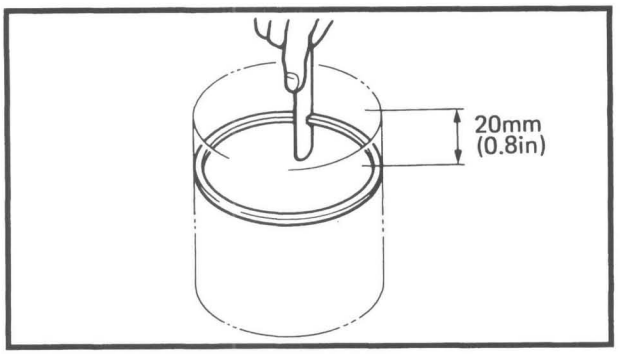

2. Position:
   - Piston ring
     Into cylinder.

NOTE:

Insert each ring, one at a time, into the cylinder, and push it approximately 20 mm (0.8 in) into the cylinder. Push the ring with the piston crown so that the ring will be at a right angle to the cylinder bore.

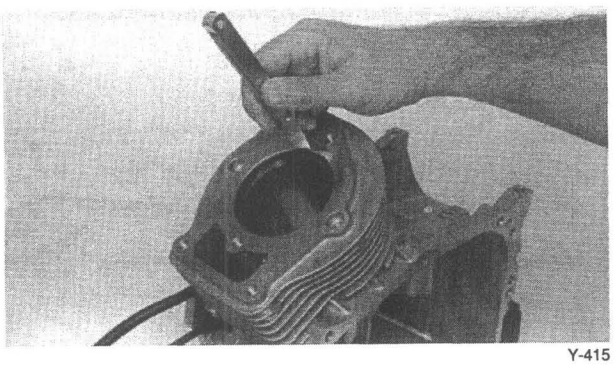
Y-415

3. Measure:
   - End gap
     Use a Feeler Gauge ①
     Out of specification → Replace rings as set.

	End Gap	
	Standard	Limit
Top Ring	0.2 ~ 0.4 mm (0.008 ~ 0.016 in)	1.0 mm (0.04 in)
2nd Ring	0.2 ~ 0.4 mm (0.008 ~ 0.016 in)	1.0 mm (0.04 in)
Oil Ring	0.2 ~ 0.7 mm (0.008 ~ 0.028 in)	1.3 mm (0.05 in)

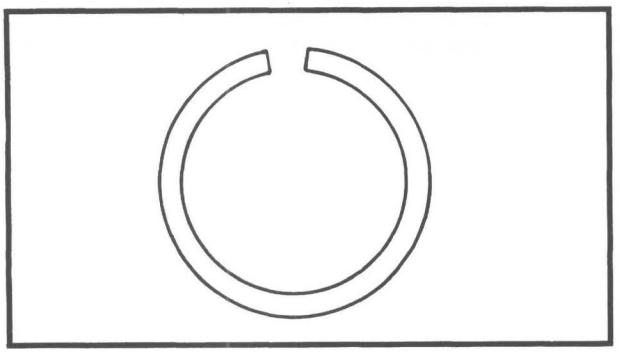

Piston Ring Oversize

- Top and 2nd piston ring
  Oversize top and middle ring sizes are stamped on top of ring.

Oversize 1	0.25 mm(0.0098 in)
Oversize 2	0.50 mm(0.0197 in)

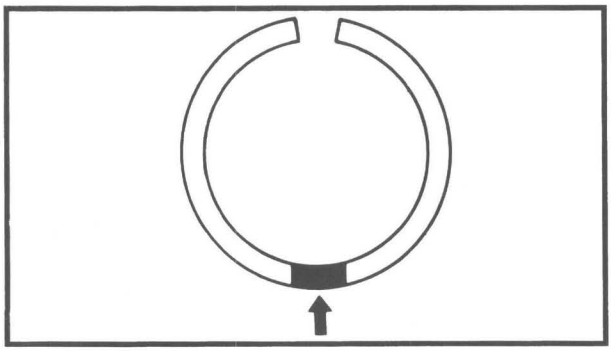

- Oil control ring
  Expander spacer of bottom ring (oil control ring) is color-coded to identify sizes.

Size	Color
Oversize 1	White
Oversize 2	Blue

Piston Pin

1. Inspect:
   - Piston pin
     Blue discoloration/Grooves → Replace then inspect lubrication system.

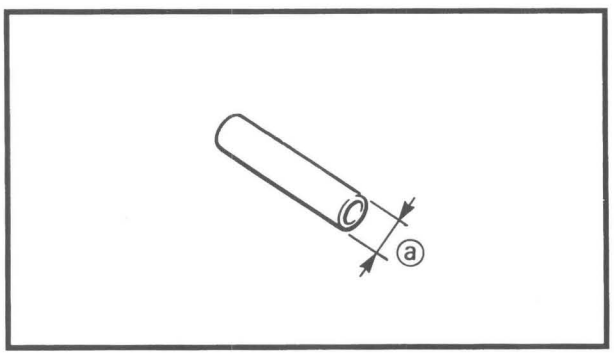

2. Measure:
   - Outside diameter ⓐ (Piston pin)
     Out of specification → Replace.

Outside Diameter (Piston Pin):
17.995 ~ 18.000 mm
(0.7085 ~ 0.7087 in)

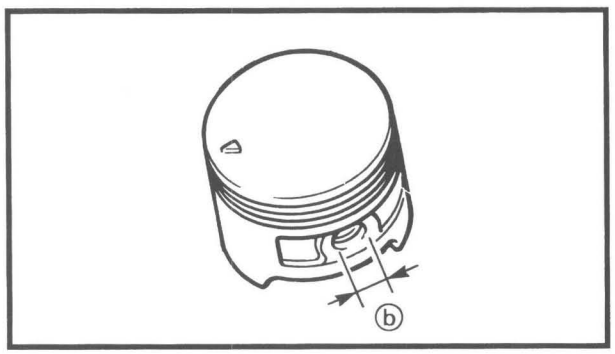

3. Measure:
   - Piston pin-to-piston clearance
     Out of specification → Replace piston.

Piston Pin-to-Piston Clearance =
Bore Size (Piston Pin) ⓑ –
Outside Diameter (Piston Pin) ⓐ

Piston Pin-to-Piston Clearance:
0.004 ~ 0.020 mm
(0.0002 ~ 0.0008 in)
< Limit: 0.07 mm (0.003 in) >

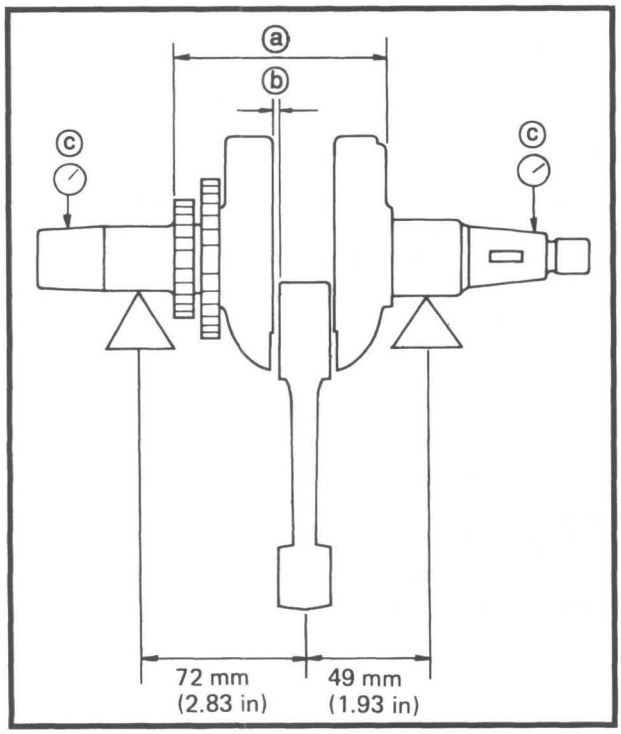

CRANKSHAFT AND CONNECTING ROD

Crankshaft Runout

1. Measure:
   - Crankshaft assembly width ⓐ.
     Out of specification → Replace crankshaft.

Crankshaft Assembly Width ⓐ:
109.65 ~ 110.05 mm
(4.317 ~ 4.333 in)

- Crankshaft deflection ⓒ
  Use V-blocks and Dial Gauge.
  Out of specification → Replace.

Crankshaft Deflection ⓒ:
0.05 mm (0.002 in)

- Connecting rod big end side clearance ⓑ.
  Out of specification → Replace connecting rod.

Big End Side Clearance ⓑ:
0.2 ~ 0.5 mm (0.008 ~ 0.020 in)

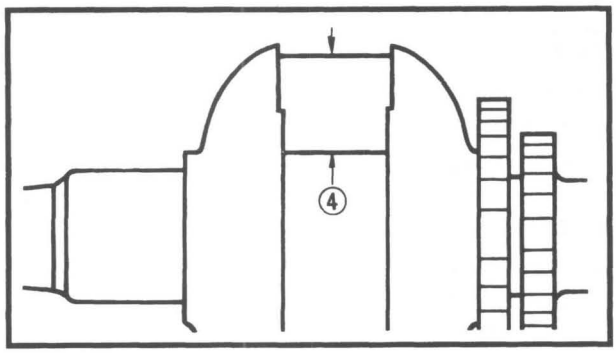

Crank Pin Outside Diameter

1. Measure:
   - Crank pin outside diameter ④
     Use a micrometer.
     Out of specification → Replace.

Crank Pin Outside Diameter:
31.95 ~ 31.97 mm
(1.258 ~ 1.259 in)
Crank Pin Round or Taper Limit:
0.03 mm (0.0012 in)

Connecting Rod Bearing Clearance

1. Clean:
   - Crankshaft
   - Connecting rod and cap
   - Connecting rod bearings

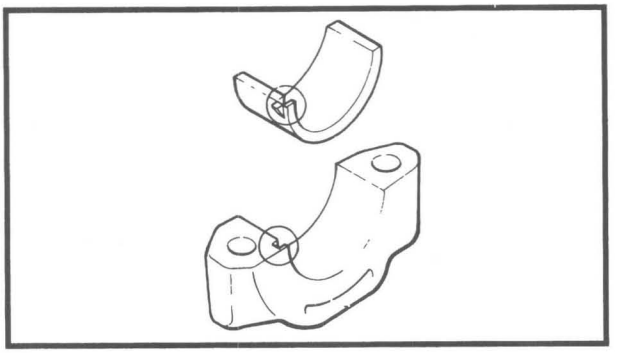

2. Install:
   - Connecting rod bearings
     into connecting rod and cap.

NOTE:
Be sure to align the bearing end projection with the notches of the connecting rod and cap.

3. Attach:
   - Plastigage®
     Onto the crank pin.

	Plastigage® YU-33210

4. Install:
   - Connecting rod
     Connecting rod cap.

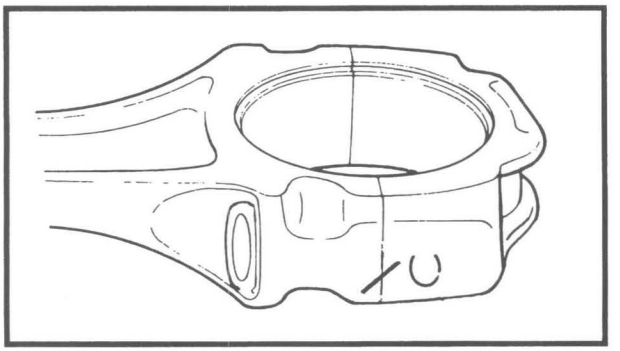

NOTE:
Be sure the mark on both components align to form perfect character. Plastigage should be 90° from rod cap to rod seam.

5. Lubricate:
   - Connecting rod bolt threads

	Molybdenum Disulfide Grease or Oil

6. Tighten:
   - Connecting rod cap nut

NOTE:
Do not turn connecting rod until clearance measurement has been completed.

CAUTION

Tighten to full torque specification without pausing. Apply continuous torque between 3.0 and 3.8 m•kg. Once you reach 3.0 m•kg, DO NOT STOP TIGHTENING until final torque is reached. If tightening is interrupted between 3.0 and 3.8 m•kg, loosen nut to less than 3.0 m•kg and start again.

Connecting Rod Cap:
38 Nm (3.8 m • kg, 27 ft • lb)

7. Remove:
   - Connecting rod cap
     Use care in removing.

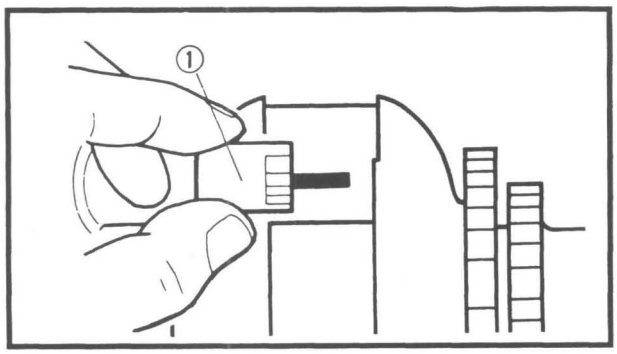

8. Measure:
   - Width of plastigage® ①
     Out of specification → Replace bearings and/or replace crankshaft if necessary.

Connecting Rod Bearing Clearance:
0.020 ~ 0.050 mm
(0.0008 ~ 0.0020 in)
Limit: 0.1 mm (0.004 in)

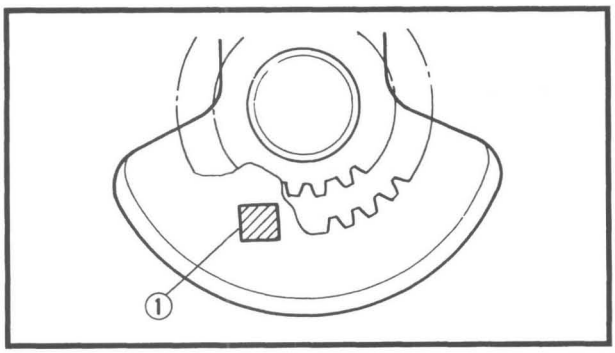

Connecting Rod Bearing Selection

- Numbers used to indicate crankpin size are stamped on crank web ①.

No.	Size
1	31.961 ~ 31.970 mm (1.2583 ~ 1.2587 in)
2	31.952 ~ 31.961 mm (1.2580 ~ 1.2583 in)

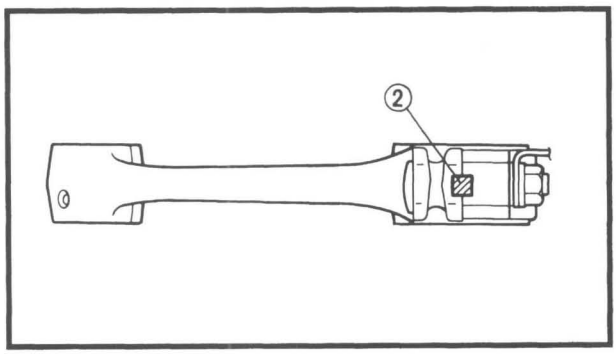

- Connecting rod is numbered "0" or "1"; numbers are in ink, on the rod ②.

No.	Size
0	35.012 ~ 35.024 mm (1.3784 ~ 1.3789 in)
1	35.000 ~ 35.012 mm (1.3780 ~ 1.3784 in)

NOTE:
This number is the match mark.

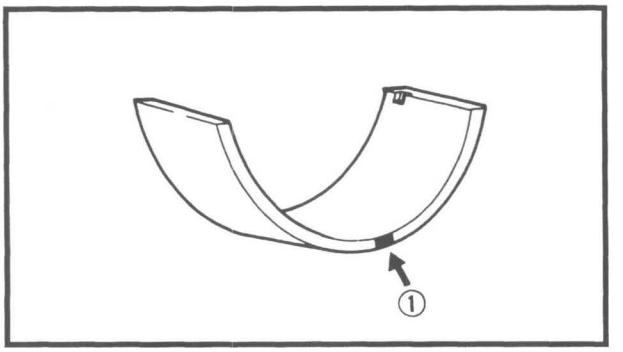

1. Subtract rod size number from crank pin number to select.

No.	Color ①	Part No.
0	Brown	J38-11656-00
1	Black	J38-11656-10
2	Blue	J38-11656-20


Y-366

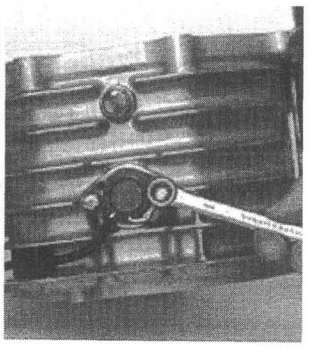
Y-365

ENGINE ASSEMBLY AND ADJUSTMENT

ENGINE BRACKET

1. Install:
   - Oil level switch
   - Engine bracket

Oil Level Switch Holding Screw:
10 Nm (1.0 m • kg, 7.2 ft • lb)
Bracket Holding Bolt:
39 Nm (3.9 m • kg, 28 ft • lb)

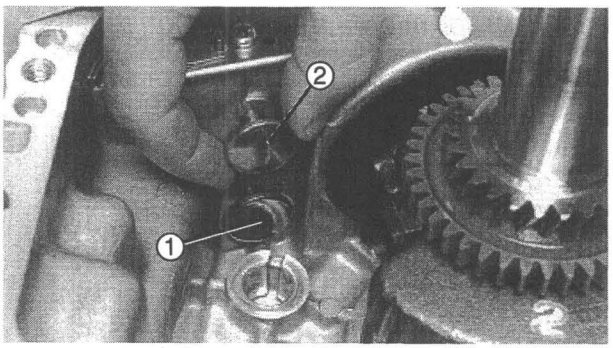

Y-360

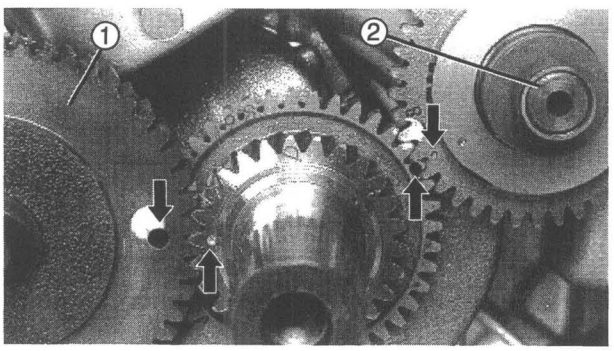

Y-367

CRANKSHAFT, CAMSHAFT AND BALANCER SHAFT

1. Install:
   - Crankshaft
   - Tappets (Exhaust ①/Intake ②)

NOTE:
Be sure the tappets are positioned correctly.

2. Install:
   - Camshaft ①
   - Balancer shaft ②

NOTE:
Align the hole in the camshaft gear with the punch mark on the crankshaft cam gear. Align the punch mark on the balancer shaft gear with the inkstamp mark on the crankshaft balancer gear.

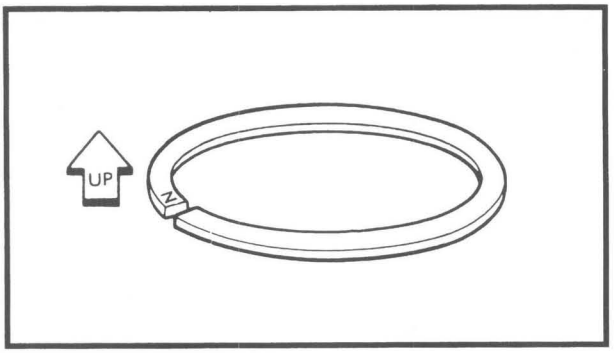

PISTON AND CONNECTING ROD

1. Install:
   - Piston rings
     onto the piston using a piston ring expander.

NOTE:

Be sure to install the rings so that manufacturer' s marks or numbers are located on the top side of the rings. Oil the pistons and rings liberally.

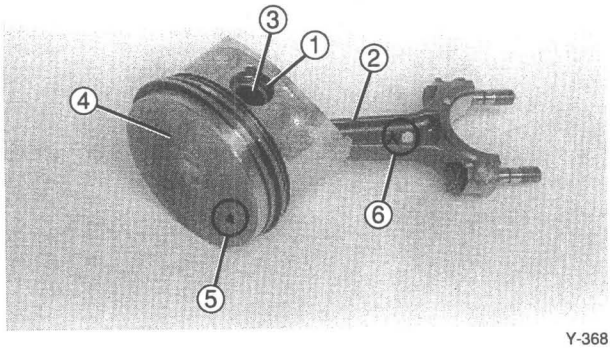

Y-368

2. Install:
   - Connecting rod ②
   - Piston pin ③
   - Piston pin clip ①
     (onto piston ④)

NOTE:

- Install the piston with the arrow mark ⑤ on the piston head pointing toward left of the "Y" mark ⑥.
- Always install new piston pin clips ①.

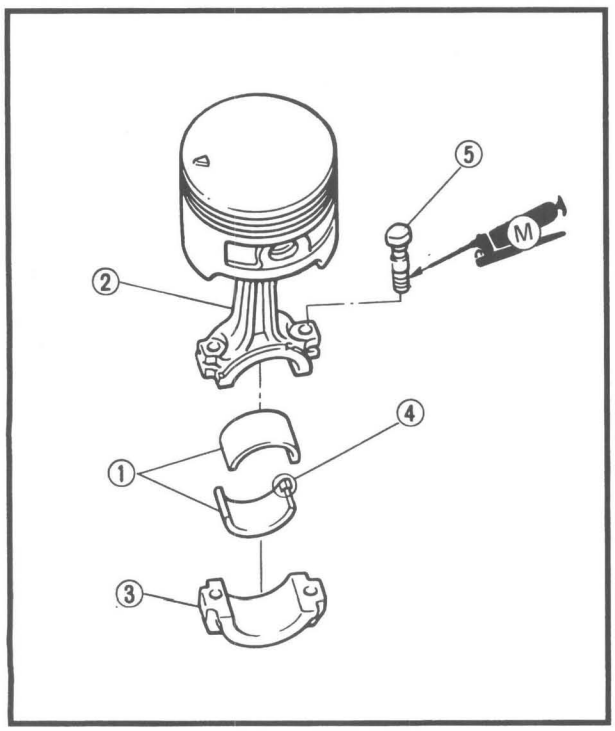

3. Install:
   - Connecting rod bearings ①
     Into connecting rod ② and cap ③.

NOTE:

Be sure to align the bearing end projection ④ with the notches of the connecting rod and cap.

   - Connecting rod bolts ⑤
     Into connecting rod ②.
4. Lubricate:
   - Connecting rod bolt threads

Molybdenum Disulfide Grease

CRANKSHAFT, BALANCER SHAFT, AND CAMSHAFT

① Crankcase
② Balancer shaft
③ Crankshaft
④ Tappet
⑤ Camshaft
⑥ Oil level switch
⑦ Oil drain plug

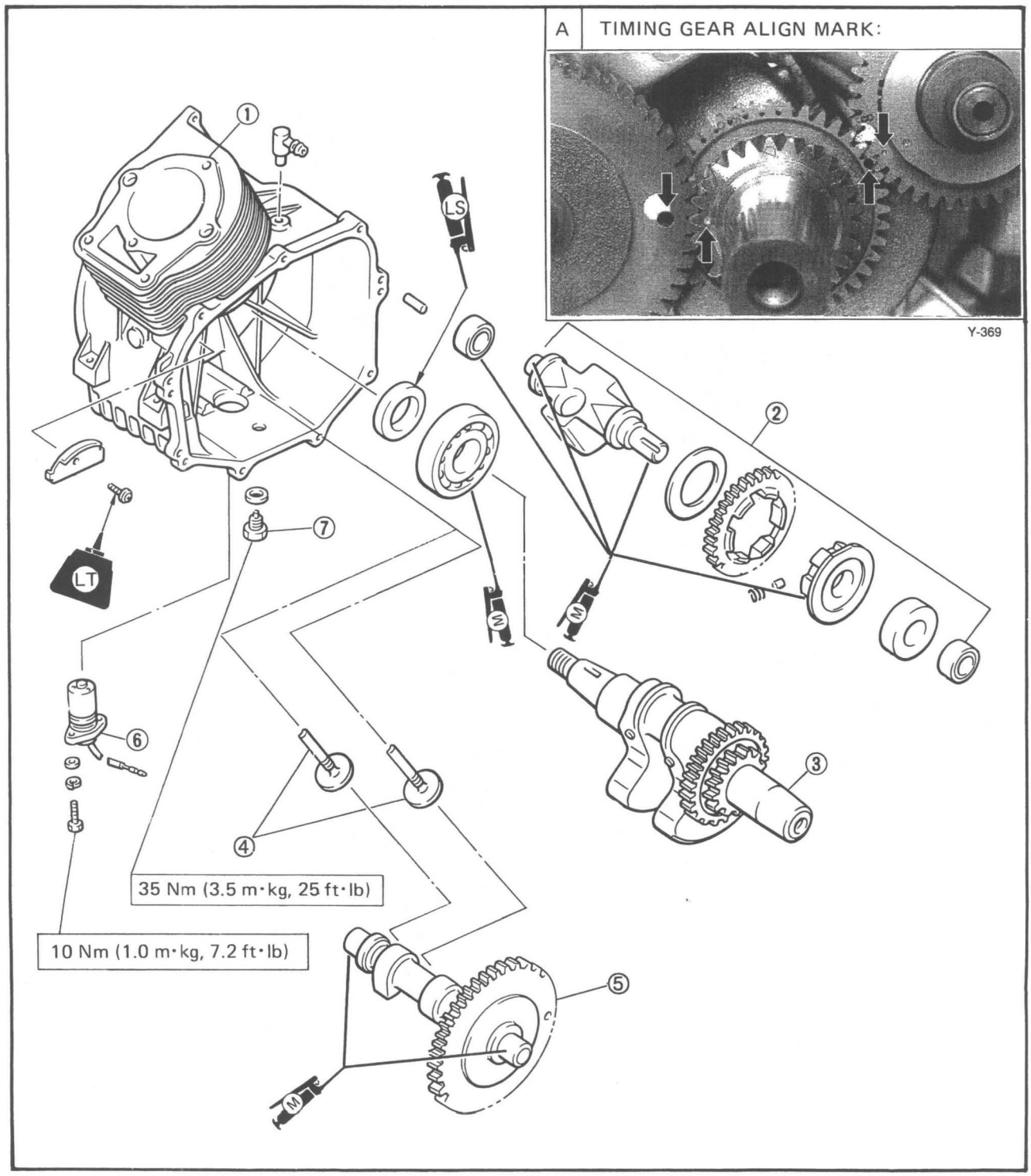

PISTON, CONNECTING ROD, AND CRANKCASE COVER

① Top ring
② 2nd ring
③ Oil ring
④ Piston
⑤ Piston pin
⑥ Piston pin clip
⑦ Connecting rod
⑧ Connecting rod bearing
⑨ Rod cap
⑩ Splashed plate
⑪ Dip stick
⑫ Filler cap
⑬ Crankcase cover
⑭ Gasket
⑮ Nut
⑯ Rod cap bolt

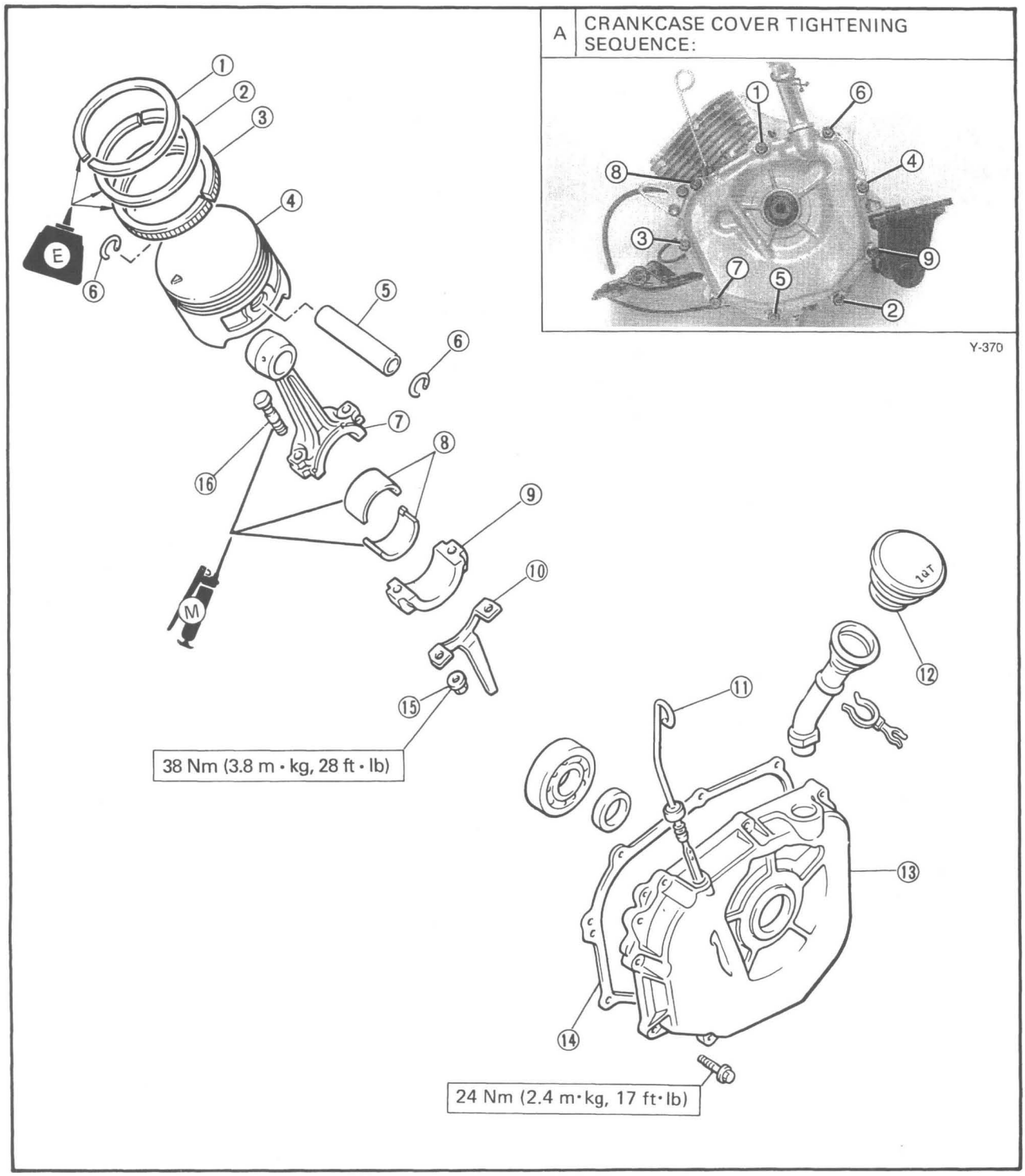

5. Oil liberally:
   - Piston
   - Rings
   - Cylinder
   - Piston Pin

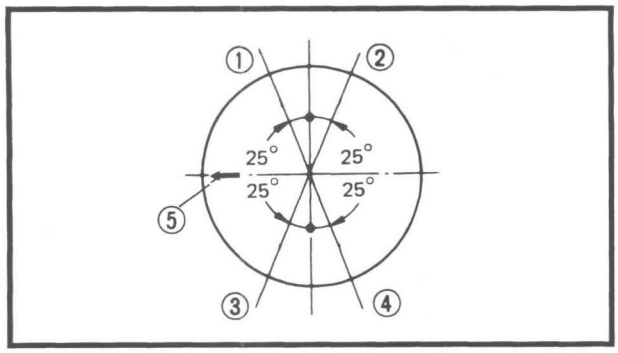

6. Set:
   - Piston ring ends

NOTE:
Make sure the ends of the oil ring expander does not overlap.

① TOP RING
② OIL RING (LOWER RAIL)
③ OIL RING (UPPER RAIL)
④ 2ND RING
⑤ ARROW MARK

7. Install:
   - Piston/Connecting rod
     into cylinder using a piston ring compressor.

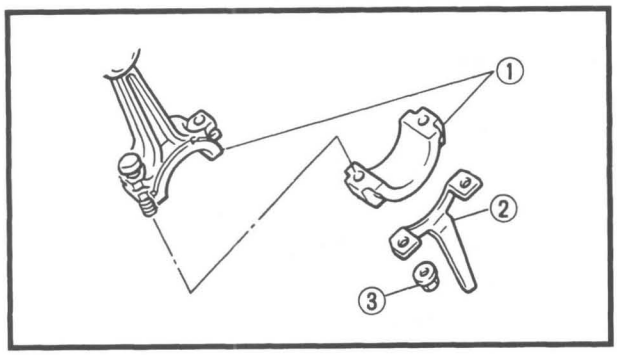

NOTE:
The arrow mark on the piston should face toward the front of the engine (push rod side).

	**Piston Ring Compressor:** **YU-33294**

8. Install:
   - Connecting rod cap ① (with bearing)
   - Splash plate ②
   - Connecting rod cap nuts ③

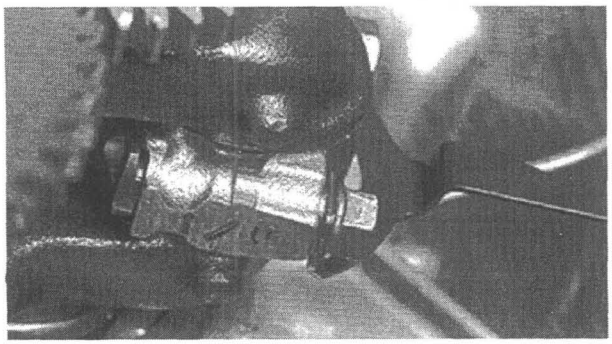
Y-371

NOTE:
Align the joint marks on the connecting rod and cap.

	**Connecting Rod Cap Nut:** **38 Nm (3.8 m • kg, 28 ft • lb)**

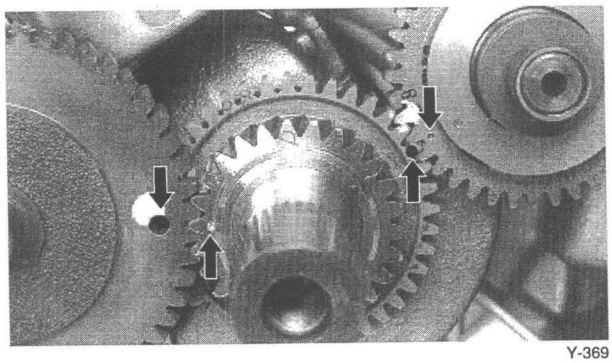

Y-369

9. Align the hole in the camshaft gear with the punch mark on the crankshaft cam gear. Align the punch mark on the balancer shaft gear with the inkstamp mark on the crankshaft balancer gear.

NOTE:
Do not turn the crankshaft in this position until the rocker arms are installed.

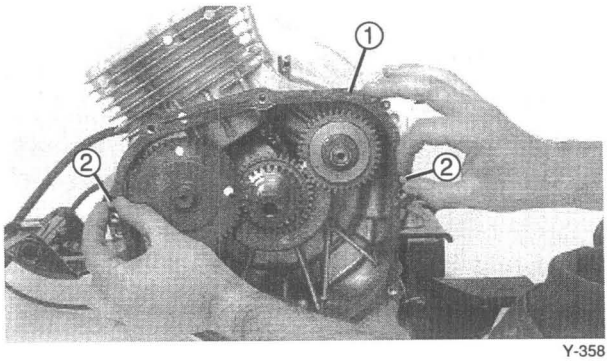

Y-358

CRANKCASE COVER

1. Install:
   - Dowel pins ②
   - Gasket (New) ①

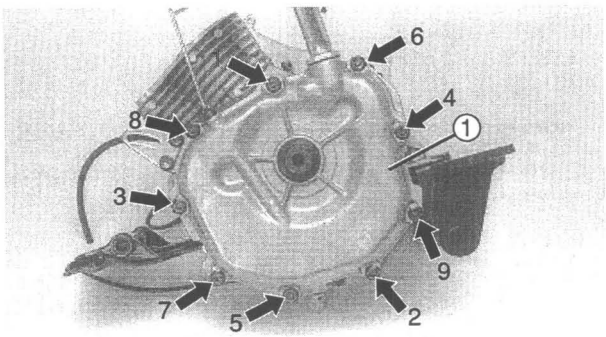

Y-357

2. Install:
   - Crankcase cover ①

NOTE:
Follow numerical number shown in photo.

	Crankcase Cover Bolts: **24 Nm (2.4 m • kg, 17 ft • lb)**

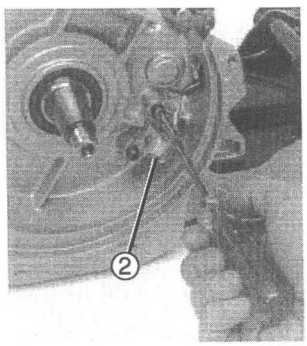

Y-356

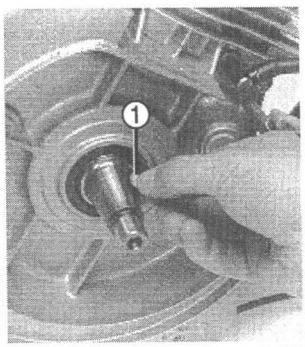

Y-355

FLYWHEEL

1. Remove any oil and/or grease from the tapered portion of crankshaft and flywheel with a non-oily solvent.
2. Install:
   - Pickup coil ②

NOTE:
Insert the pickup coil grommet completely into the crankcase.

3. Install:
   - Woodruff key ①
   - Flywheel
   - Washer
   - Spring washer
   - Nut

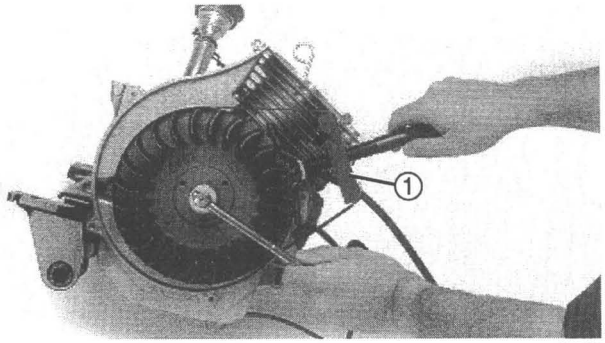

Y-353

4. Tighten:
   - Flywheel securing nut
     Use the primary Sheave Holder ①.

	Flywheel Securing Nut: **75 Nm (7.5 m • kg, 54 ft • lb)**
	Primary Sheave Holder: **YS-1880-A, 90890-01701**

PRIMARY SHEAVE

1. Install:
   - Primary sheave assembly
     Use the Primary Sheave Holder.
     Refer to CHAPTER 4 "PRIMARY SHEAVE – INSTALLATION" section.

	Bolt (Primary Sheave): **85 Nm (8.5 m • kg, 61 ft • lb)**

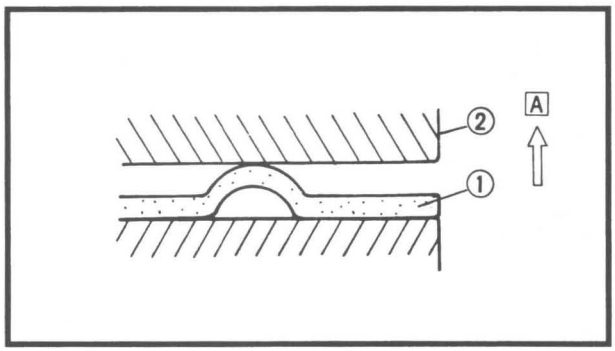

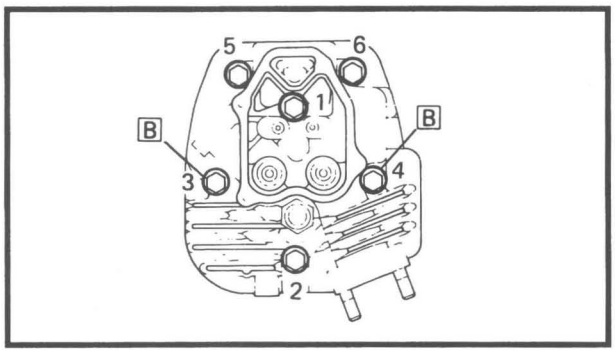

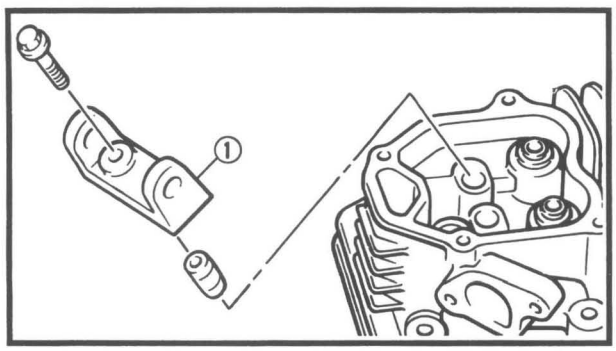

CYLINDER HEAD

1. Install:
   - Dowel pins
   - Gasket (New) ①
   - Cylinder head ②
   - Bolts

NOTE:
The swelling side of the gasket ① should face upward.

Ⓐ UPWARD

NOTE:
Tighten the bolts in sequence as shown and torque the bolts in two stages.

	Bolt (Cylinder Head): **28 Nm (2.8 m • kg, 20 ft • lb)**

Ⓑ LONGER BOLT

2. Install:
   - Rocker-arm-shaft supporter ①

	Supporter Holding Bolt: **10 Nm (1.0 m • kg, 7.2 ft • lb)**

FLYWHEEL

① Grommet
② Pick up coil
③ Woodruff key
④ Flywheel
⑤ Spring washer
⑥ Nut

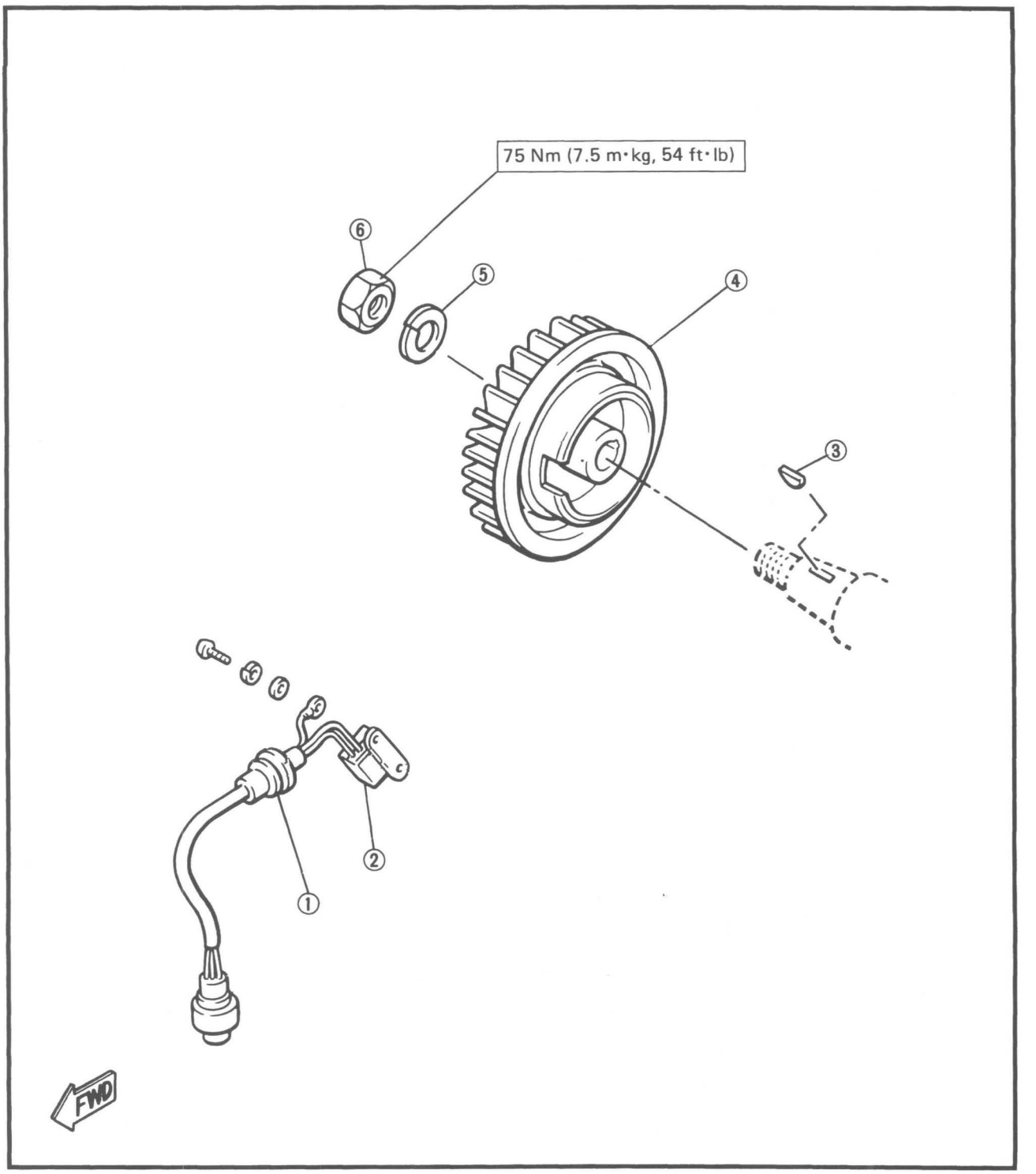

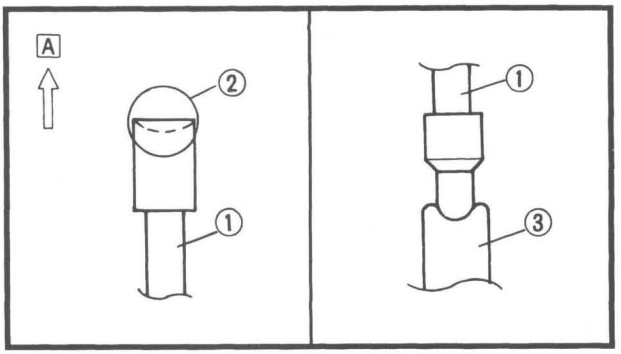

3. Install:
   - Push rods ①

NOTE:
- Be sure the push rod is positioned correctly.
- The hollow end ② of the push rod should face upward.
- Be sure the push rod is placed correctly onto the tappet ③.

A UPWARD

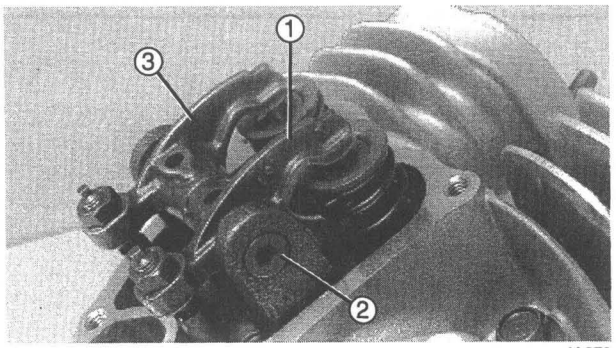

Y-372

4. Install:
   - Rocker arm (Intake) ①
   - Rocker arm shaft ②
   - Rocker arm (Exhaust) ③

5. Adjust:
   - Valve clearance
     Refer to CHAPTER 2 "VALVE CLEARANCE ADJUSTMENT" section.

Valve Clearance (Cold):
Intake and exhaust:
0.1 mm (0.004 in)

6. Install:
   - Gasket (New)
   - Cylinder head cover ①
   - Spark plug

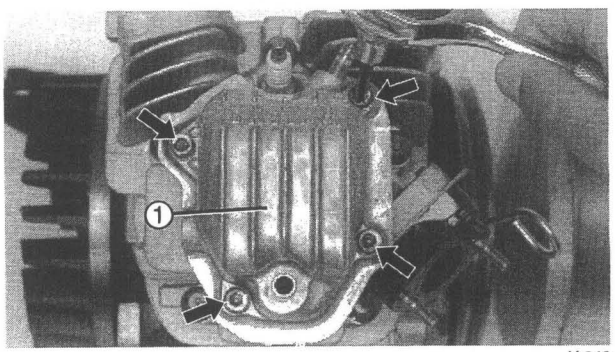

Y-346

Bolt (Cylinder Head Cover):
10 Nm (1.0 m • kg, 7.2 ft • lb)
Spark Plug:
20 Nm (2.0 m • kg, 14 ft • lb)

AIR SHROUD

1. Install:
   - Air shroud (Side) ①

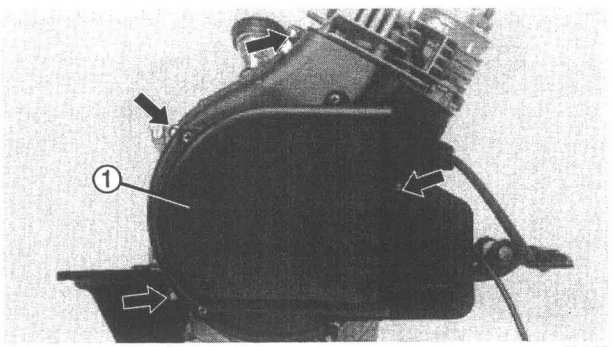

Y-345

Bolt (Air Shroud – Side):
8 Nm (0.8 m • kg, 5.8 ft • lb)
LOCTITE®

CYLINDER HEAD AND ROCKER ARM

① Cylinder head cover
② Rocker arm (Exhaust)
③ Rocker arm (Intake)
④ Rocker-arm-shaft support
⑤ Rocker arm shaft
⑥ Push rod
⑦ Cylinder head
⑧ Gasket

A	VALVE CLEARANCE: (COLD) (Intake and Exhaust) 0.1 mm (0.004 in.)
B	CYLINDER HEAD TIGHTENING SEQUENCE

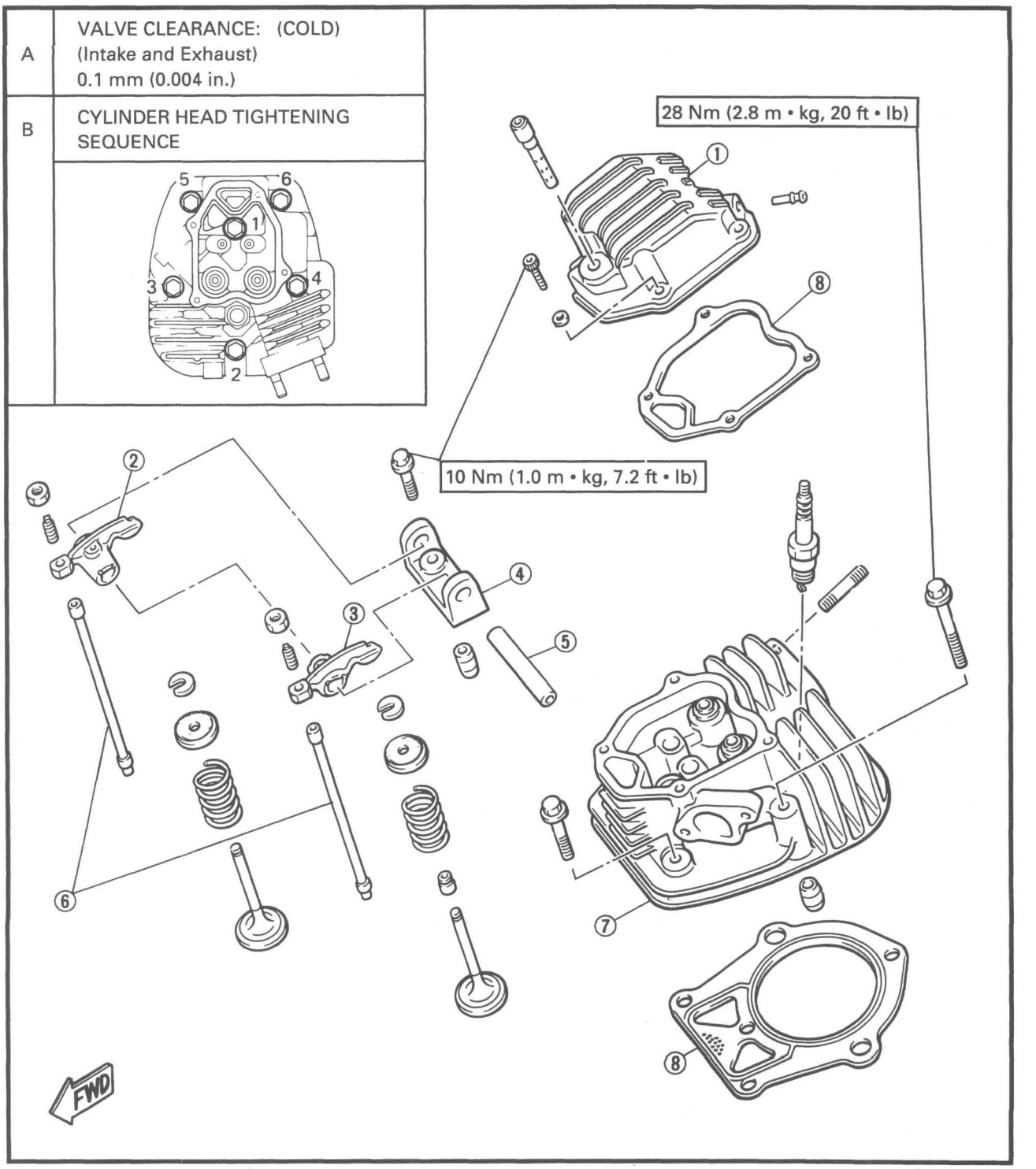

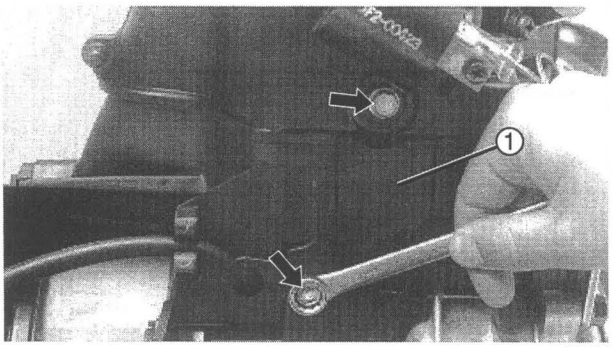

Y-344

2. Install:
   - Air shroud (Front) ① (With ignition coil)

Bolt (Air Shroud – Front):
8 Nm (0.8 m·kg, 5.8 ft·lb)
LOCTITE®

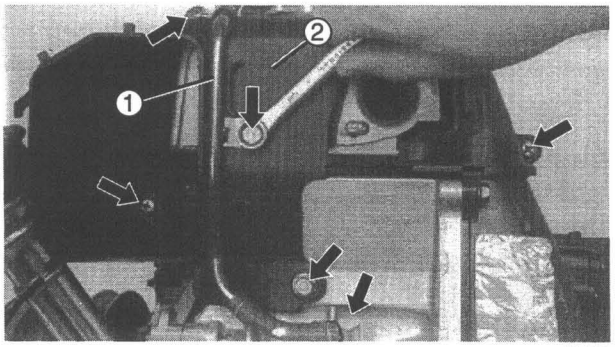

Y-343

3. Install:
   - Air shroud (Rear) ②
   - Oil delivery hose ①

Screw (Air Shroud – Rear):
8 Nm (0.8 m·kg, 5.8 ft·lb)
LOCTITE®

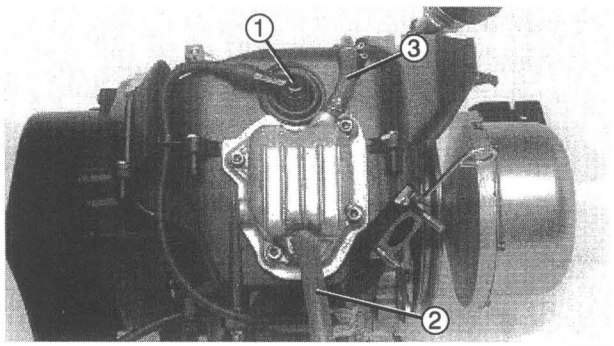

Y-342

4. Connect:
   - Oil delivery hose ③
   - Crankcase breather hose ②
   - Plug cap ①

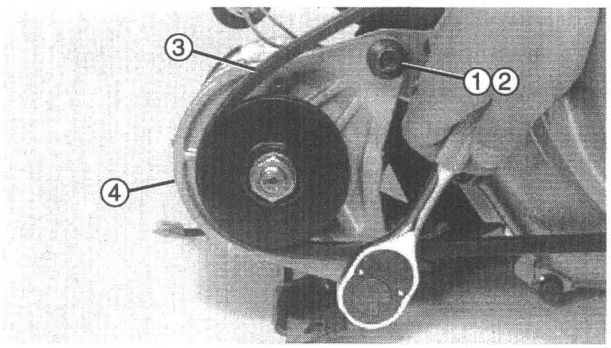

Y-341

STARTER-GENERATOR

1. Install:
   - Starter-generator ④
   - Bolts and nuts ①②
   - V-belt ③

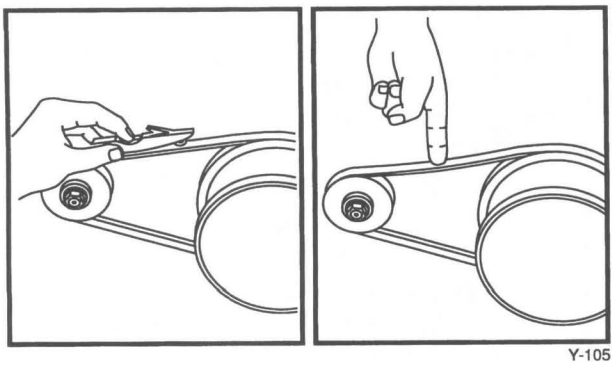

Y-105

2. Adjust:
   - Belt tension ⓐ
     Refer to CHAPTER 3 "STARTER BELT INSPECTION" section.

Starter Belt Tension ⓐ :
8 ~ 12 mm /10 kg
(0.31 ~ 0.47 in/22 lb)

Belt Tension Bolt-Nut:
14 Nm (1.4 m • kg, 10 ft • lb)
Holding Bolt-Nut:
53 Nm (5.3 m • kg, 38 ft • lb)

REMOUNTING ENGINE

Reverse the "ENGINE REMOVAL" procedure. Note the following points.

1. Install:
   - Engine (With bracket)
   - Mounting nuts

Engine Bracket Mounting Nut:
35 Nm (3.5 m•kg, 25 ft•lb)

NOTE:
Do not "twist" engine mounts when tightening mounting nuts. This can cause vibration and/or noise.

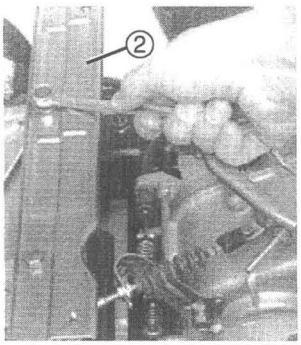

Y-338

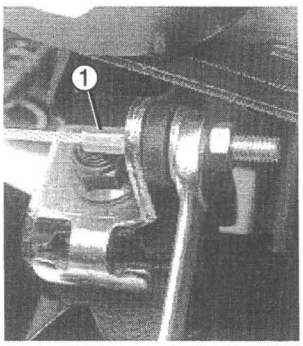

Y-337

2. Install:
   - Muffler stay (with throttle cable) ②
3. Adjust:
   - Engine bracket tensioner cable ①
     Refer to CHAPTER 2 "ENGINE BRACKET ADJUSTMENT" section.

Engine Bracket Tension Free Play:
2 mm (0.08 in)

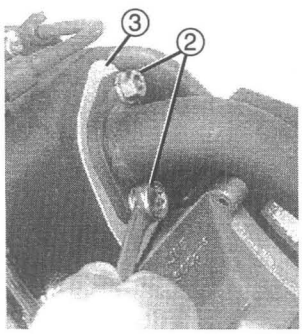

Y-336

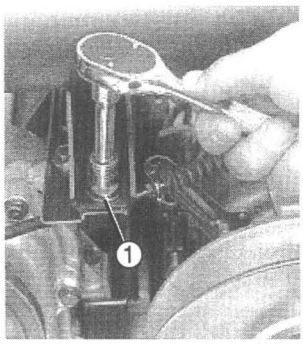

Y-335

4. Install:
   - Muffler assembly (with new gasket ③)
   - Muffler mount bolts ②
   - Exhaust pipe holding nuts ①
   - Air cleaner case
   - Carburetor

5. Tighten:
   - Bolts/Nuts/Screws

Exhaust Flange Nut ① :
20 Nm (2.0 m•kg, 14 ft•lb)
Muffler Holding Bolt ② :
14 Nm (1.4 m•kg, 10 ft•lb)
Carburetor Holding Nut:
6 Nm (0.6 m•kg, 4.3 ft•lb)
Spark Plug:
20 Nm (2.0 m•kg, 14 ft•lb)

6. Connect:
   - Throttle cable
   - Choke cable
   - Fuel hose
7. Adjust:
   - Free play (Throttle cable 2)
   - Free play (Choke cable)

   Refer to CHAPTER 2 "THROTTLE CABLE ADJUSTMENT" and "CHOKE CABLE ADJUSTMENT" section.

Free Play (Throttle Cable 2):
0.5 mm (0.02 in)
Free Play (Choke Cable):
1.0 mm (0.04 in)

8. Fill:
   - Crankcase

   Refer to CHAPTER 2 "ENGINE OIL REPLACEMENT" section.

Recommended Oil:
YAMALUBE 4-cycle oil or SAE 10W30 [If temperature does not go below 2°C (35°F): SAE 20W40]
Oil Change Quantity:
0.9 L (1.0 US qt, 0.19 Imp gal)
Oil Capacity:
1.1 L (1.16 US qt, 0.24 Imp gal)

NOTE:
Recommended engine oil classification; API Service SE, SF, or SG. Engine oils labeled "Energy Conserving II" are recommended.

CAUTION
Do not allow foreign material to enter the engine.

CHAPTER 6
CARBURETION

CARBURETION

CARBURETOR

① Cable housing clamp
② Pilot screw (P.S.)
③ Throttle stop screw
④ Main jet (M.J.)
⑤ Main nozzle
⑥ Float
⑦ Float chamber cover
⑧ Cover holding bolt
⑨ Float needle valve
⑩ Pilot jet (P.J.)

SPECIFICATIONS		
Main jet	(M.J.)	#102.5
Main air jet	(M.A.J.)	Ø2.5
Pilot jet	(P.J.)	#60
Pilot air jet	(P.A.J.)	Ø1.2
Throttle valve	(Th.V.)	#120
Valve seat	(V.S.)	Ø1.2
By-pass (1)	(B.P.-1)	Ø0.6
By-pass (2)	(B.P.-2)	Ø0.7
By-pass (3)	(B.P.-3)	Ø0.9
By-pass (4)	(B.P.-4)	Ø0.6
Pilot outlet	(P.O.)	Ø1.0
Pilot screw	(P.S.)	1 turn out
Float height	(F.H.)	14.5 mm (0.57 in)

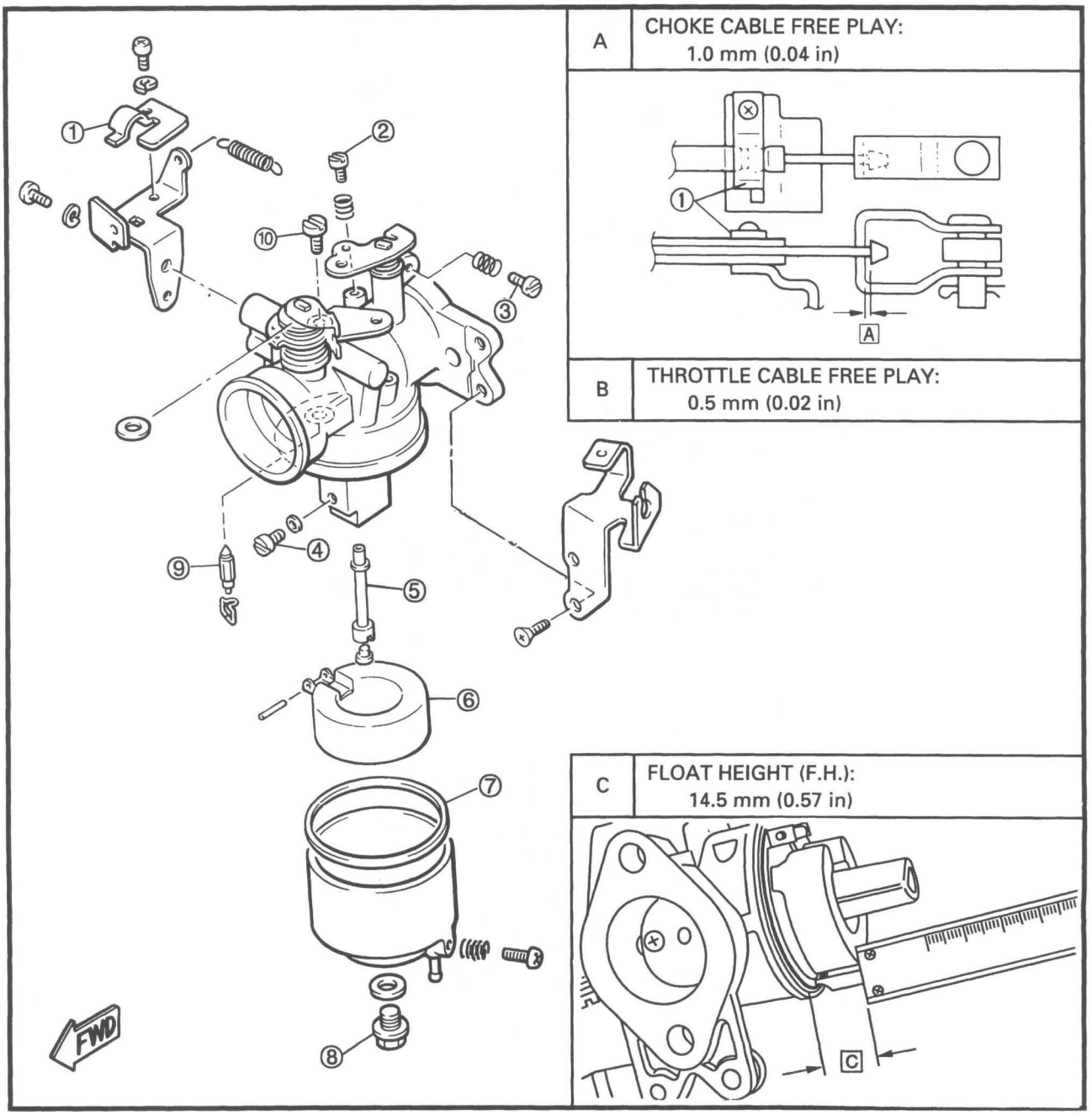

SECTION VIEW

Main Metering System

① Main nozzle
② Main air jet
③ Choke valve
④ Pilot air jet
⑤ Float
⑥ Main jet
⑦ Cover holding bolt
⑧ Float chamber cover
⑨ Throttle valve
⑩ Pilot jet
⑪ Bypass hole

A	⇦	AIR
B	⇦	MIXTURE
C	⬅	FUEL

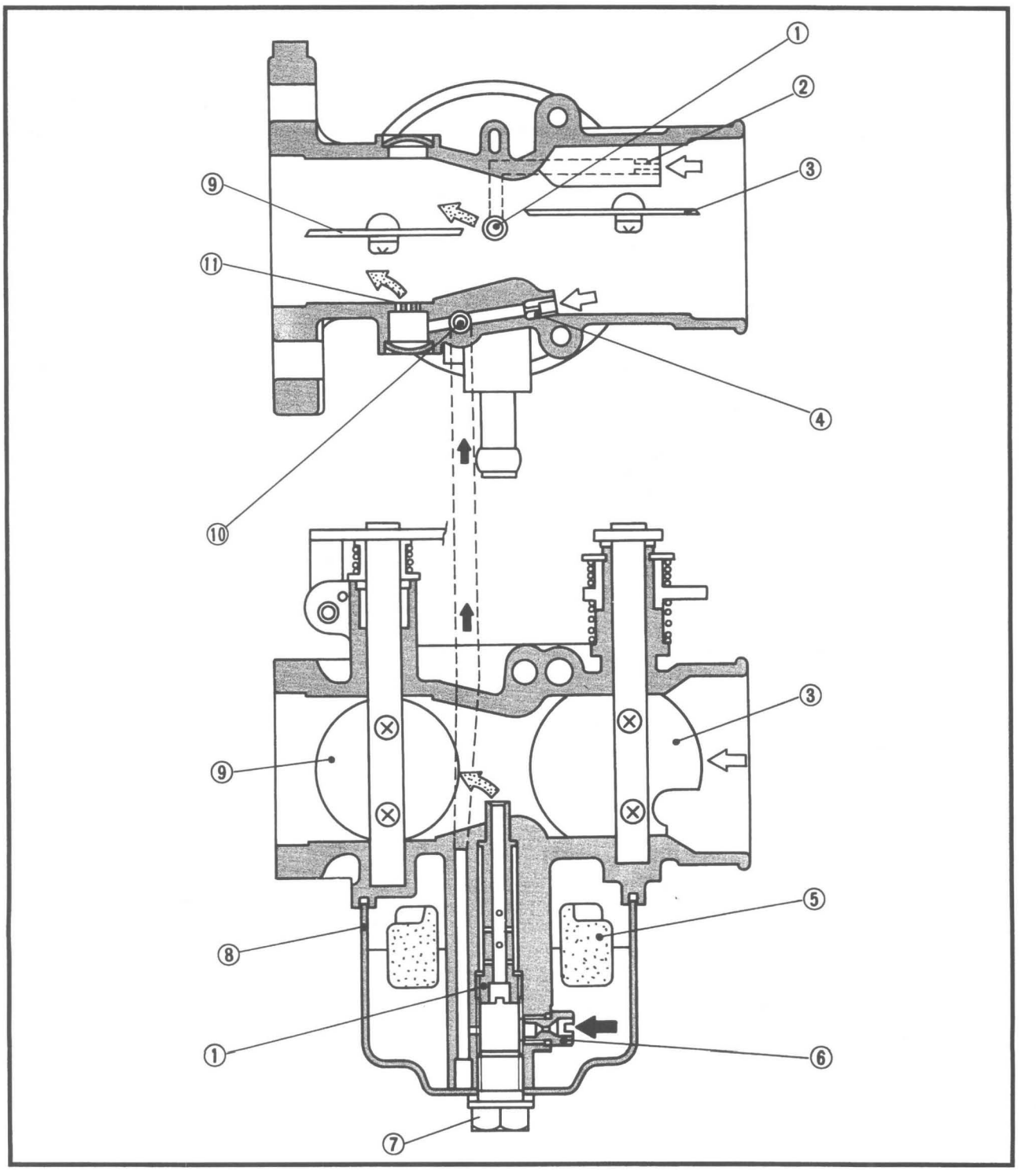

Float System

① Main nozzle
② Float
③ Float chamber cover
④ Cover holding bolt
⑤ Needle valve
⑥ Valve seat
⑦ Fuel inlet

A	⇦	AIR
B	⇦	MIXTURE
C	⬅	FUEL

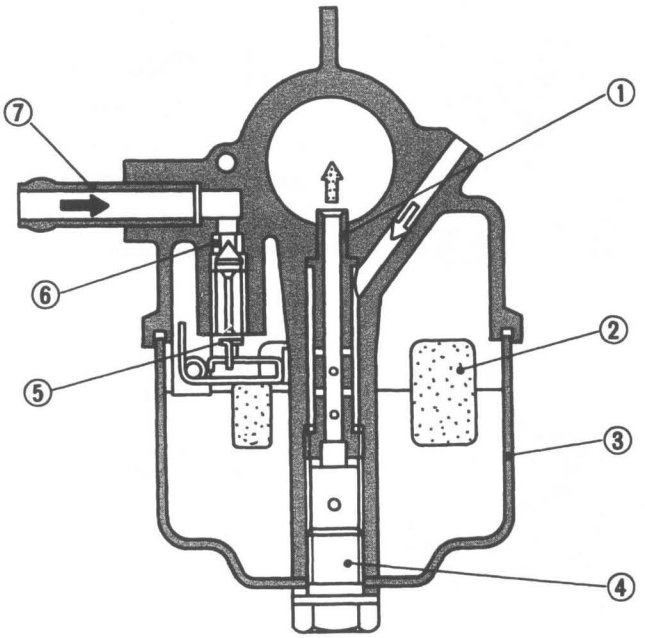

Y-374

REMOVAL

1. Remove:
   - Carburetor assembly
     Refer to CHAPTER 5 "ENGINE REMOVAL – CARBURETOR" section.

CAUTION

If the throttle valve is disassembled, a repair kit must be installed as screws are clinched and will damage shaft if removed.

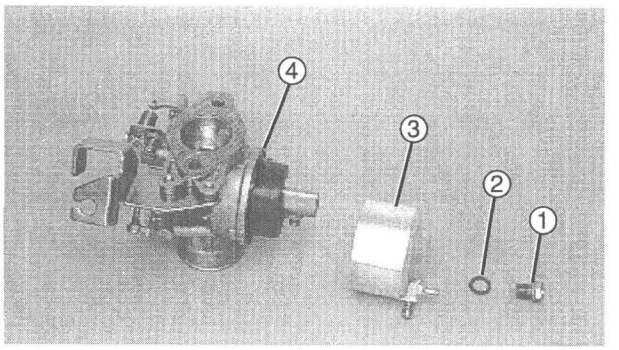

Y-375

DISASSEMBLY

1. Remove:
   - Cover holding bolt ①
   - Gasket ②
   - Float chamber cover ③
   - Rubber gasket ④

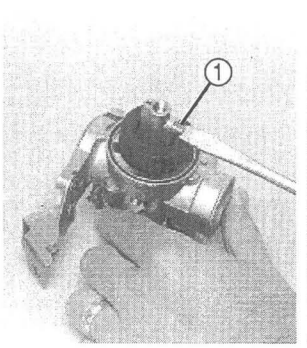

Y-376

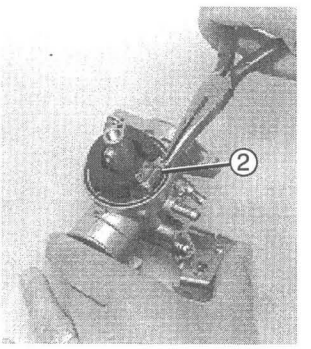

Y-377

2. Remove:
   - Main jet ①
   - Float pin ②

CAUTION

Float pin is staked on one end. When driving out float pin, use pliers, side cutters or a small punch on opposite end of staking. Use care not to break the float stanchions

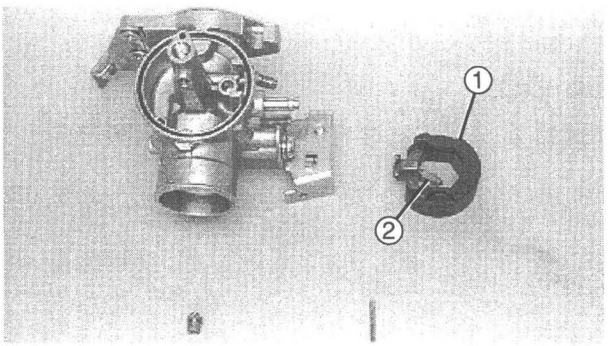

Y-378

3. Remove:
   - Float ①
   - Float needle valve ②
   - Main nozzle (located in center of float chamber)

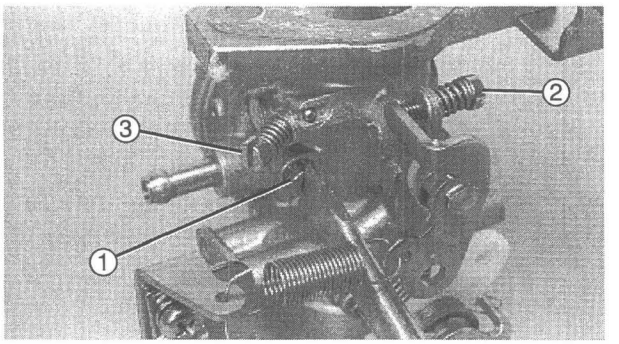

Y-379

4. Remove:
   - Pilot jet ①
   - Throttle stop screw ② (with spring)
   - Pilot screw ③ (with spring)

INSPECTION

1. Inspect:
   - Carburetor body
   - Fuel passage
     Contamination → Clean.

NOTE:

- Use a carburetor cleaner (such as acetone) for cleaning.
- Blow out all passages and jets with compressed air.

⚠ WARNING

Carburetor cleaners are extremely flammable.

- **Keep sparks and flames away from work area.**
- **Follow all cleaner manufacturer's warnings and instructions.**
- **Never use gasoline as a cleaning agent.**

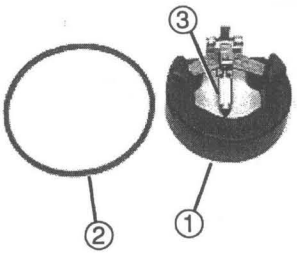

Y-380

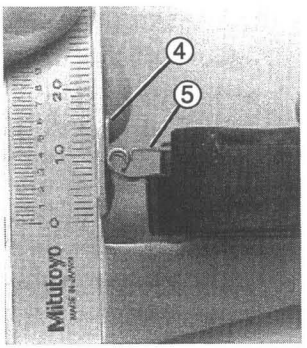

Y-381

2. Inspect:
   - Float ①
     Damaged → Replace.

NOTE:

Be sure that stopper tab ④ is 90° to float bracket ⑤.

   - Rubber gasket ②
     Damaged/Torn → Replace.
   - Needle valve ③
     Wear → Replace.
   - Valve seat
     Wear/Damage → Replace the carburetor body.

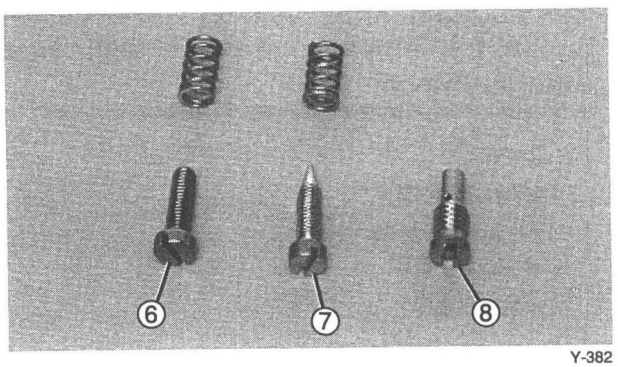

Y-382

3. Inspect:
   - Throttle stop screw ①
   - Pilot screw ②
   - Pilot jet ③
     Wear/Damage/Corrosion → Replace.

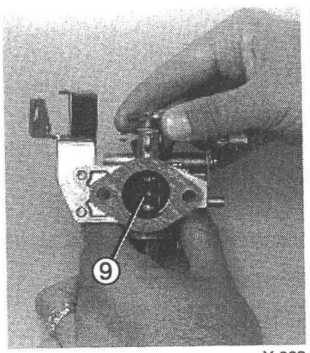

Y-383

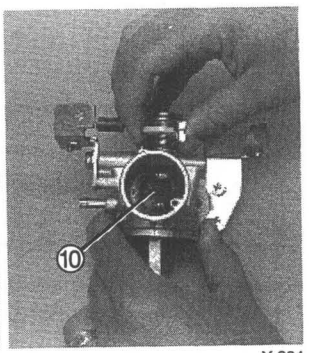

Y-384

4. Inspect:
   - Throttle valve ①
     Wear/Damage → Install kit.
   - Choke valve ②
     Wear/Damage → Replace carburetor body.
5. Check:
   - Choke valve free movement
     Sticking → Replace parts.
6. Inspect:
   - Main jet ①
   - Main nozzle ②
   - Pilot jet ③
     Contamination → Clean/Replace.

NOTE:

Blow out the jets with compressed air.

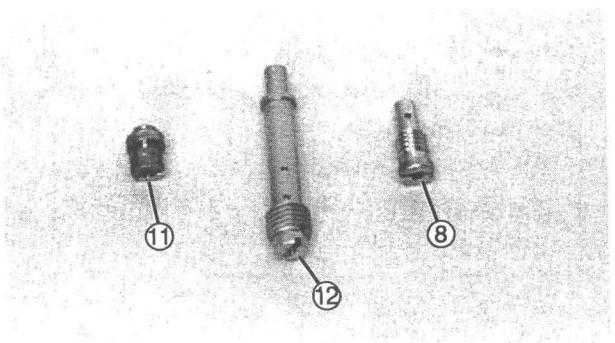

Y-385

ASSEMBLY

Reverse the "DISASSEMBLY" procedures.
Note the following points.

NOTE:
Before reassembling, wash all the parts with a carburetor cleaner (such as acetone).

⚠ WARNING

Carburetor cleaners are extremely flammable.
- **Keep sparks and flames away from work area.**
- **Follow all cleaner manufacturer's warnings and instructions.**
- **NEVER use gasoline as a cleaning agent.**

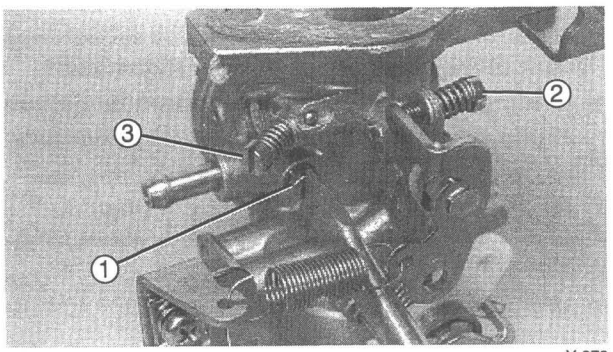

Y-379

1. Install:
   - Pilot jet ①
   - Throttle stop screw ② (with spring)
   - Pilot screw ③ (with spring)

NOTE:
See page 2-13 for pilot screw and throttle stop screw settings.

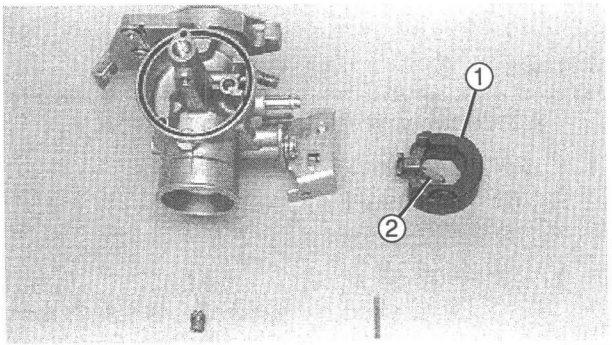

Y-378

2. Install:
   - Main nozzle
   - Float needle valve ②
   - Float ①
   - Float pin

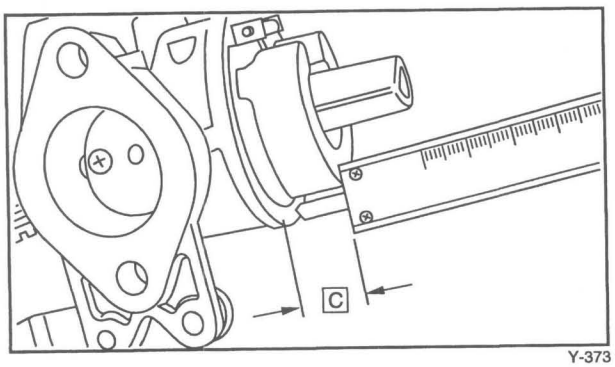

Y-373

3. Measure:
   - Float height
     Out of specification → Adjust.

Float Height (F.H.):
14.5 mm (0.57 in)

Measurement and adjustment steps:
- Hold the carburetor in an upside down position.
- Incline the carburetor at 60 ~ 70° (so that the float valve does not compress as a result of float weight).
- Measure the distance from the inside of the gasket sealing surface of the carburetor body to the top of the float.

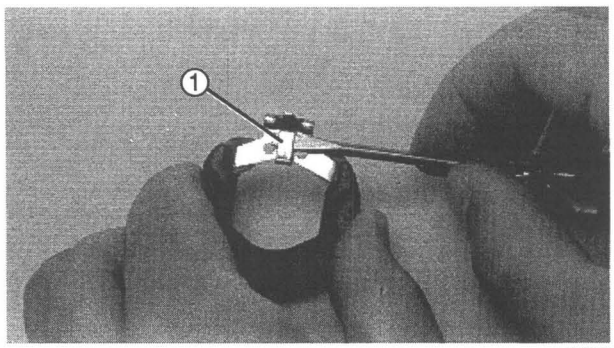

Y-386

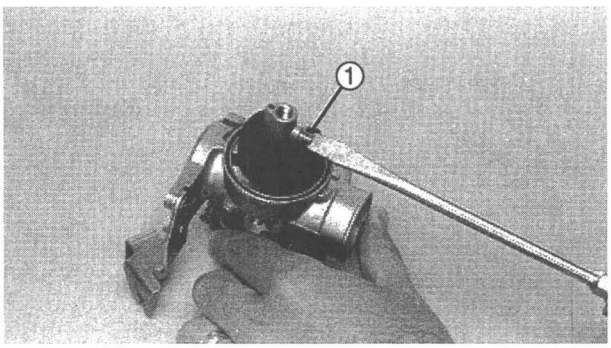

Y-387

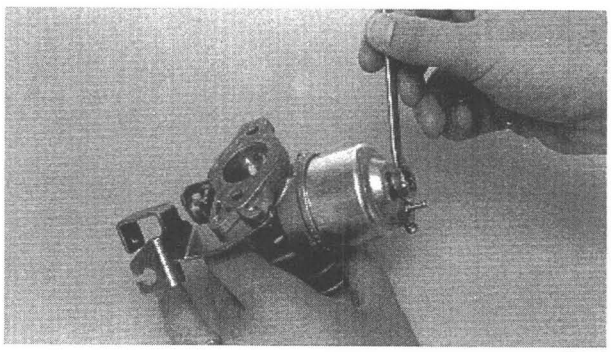

Y-374

NOTE:
The float should be just resting on, but not depressing, the spring loaded inlet needle.

- If the float height is not within specification, inspect the valve seat and needle valve.
- If needle valve rubber seat or body is worn, or if spring is damaged or sticking, replace needle valve.
- If valve seat is worn, replace carburetor.
- If both are fine, adjust the float height by bending the float tang ① on the float.

CAUTION

Do not move float stopper tab to adjust float level.

- Recheck the float height.

4. Install:
   - Main jet ①
5. - New rubber gasket
   - Float chamber cover
   - Cover holding bolt

INSTALLATION

Reverse the "REMOVAL" procedures.
Note the following points.

1. Install:
   - Carburetor

Carburetor Holding Nut:
6 Nm (0.6 m • kg, 5.3 ft • lb)

CHAPTER 7
ELECTRICAL

ELECTRICAL FOR G14-A

G14-A WIRING DIAGRAM

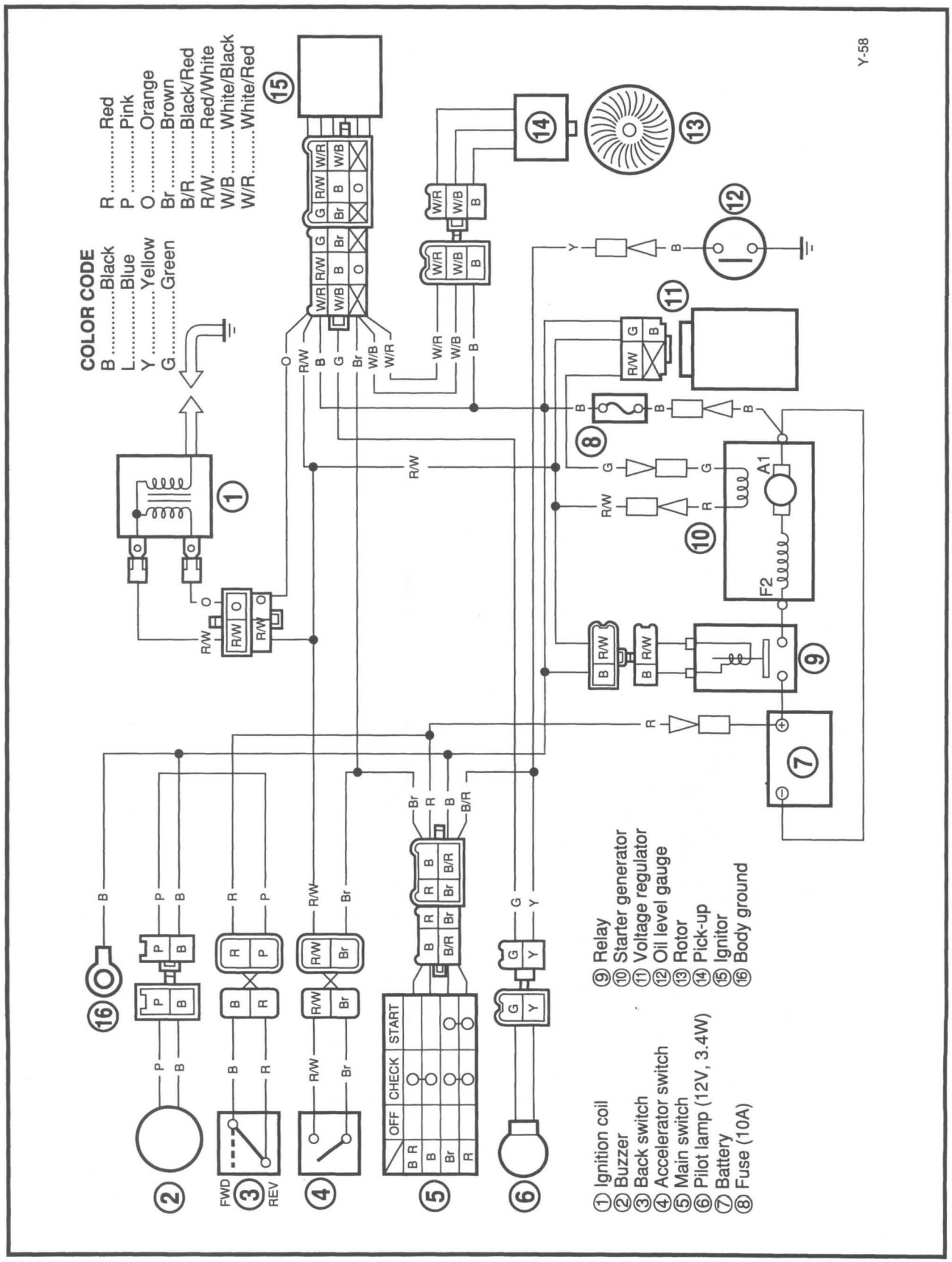

ELECTRICAL COMPONENT LOCATIONS

① Main switch
② Accelerator stop switch
③ Ignition coil
④ Spark plug
⑤ Ignitor unit
⑥ Pickup coil
⑦ Rotor
⑧ Voltage regulator
⑨ Starter-generator
⑩ Solenoid relay
⑪ Battery (12V)
⑫ Fuse
⑬ Oil level switch
⑭ Oil level indicator light
⑮ Back switch
⑯ Back-up buzzer

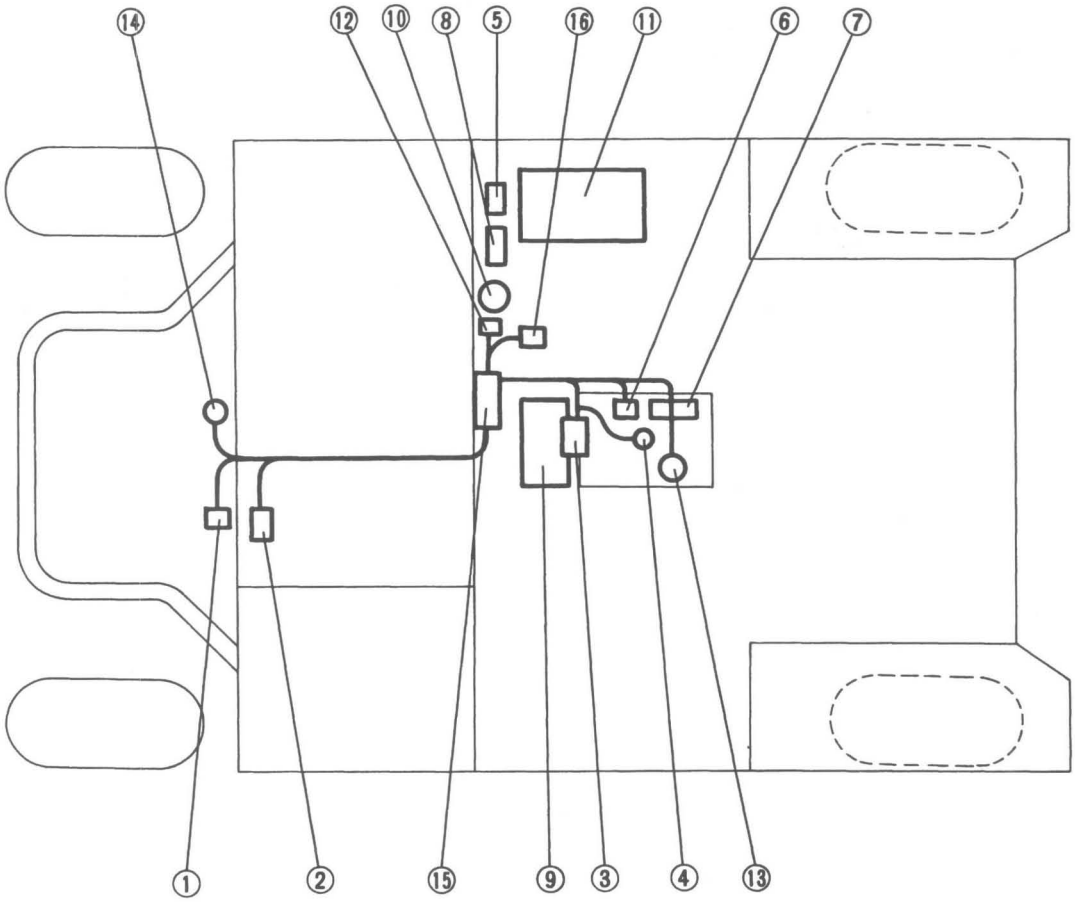

ELECTRICAL COMPONENTS

① Solenoid relay
② Pilot lamp
③ Main switch
④ Accelerator stop switch
⑤ Oil level switch
⑥ Wire harness assembly, fuse
⑦ Back-up buzzer
⑧ Earth lead wire
⑨ Battery plus lead clamp
⑩ Starter/generator
⑪ Battery

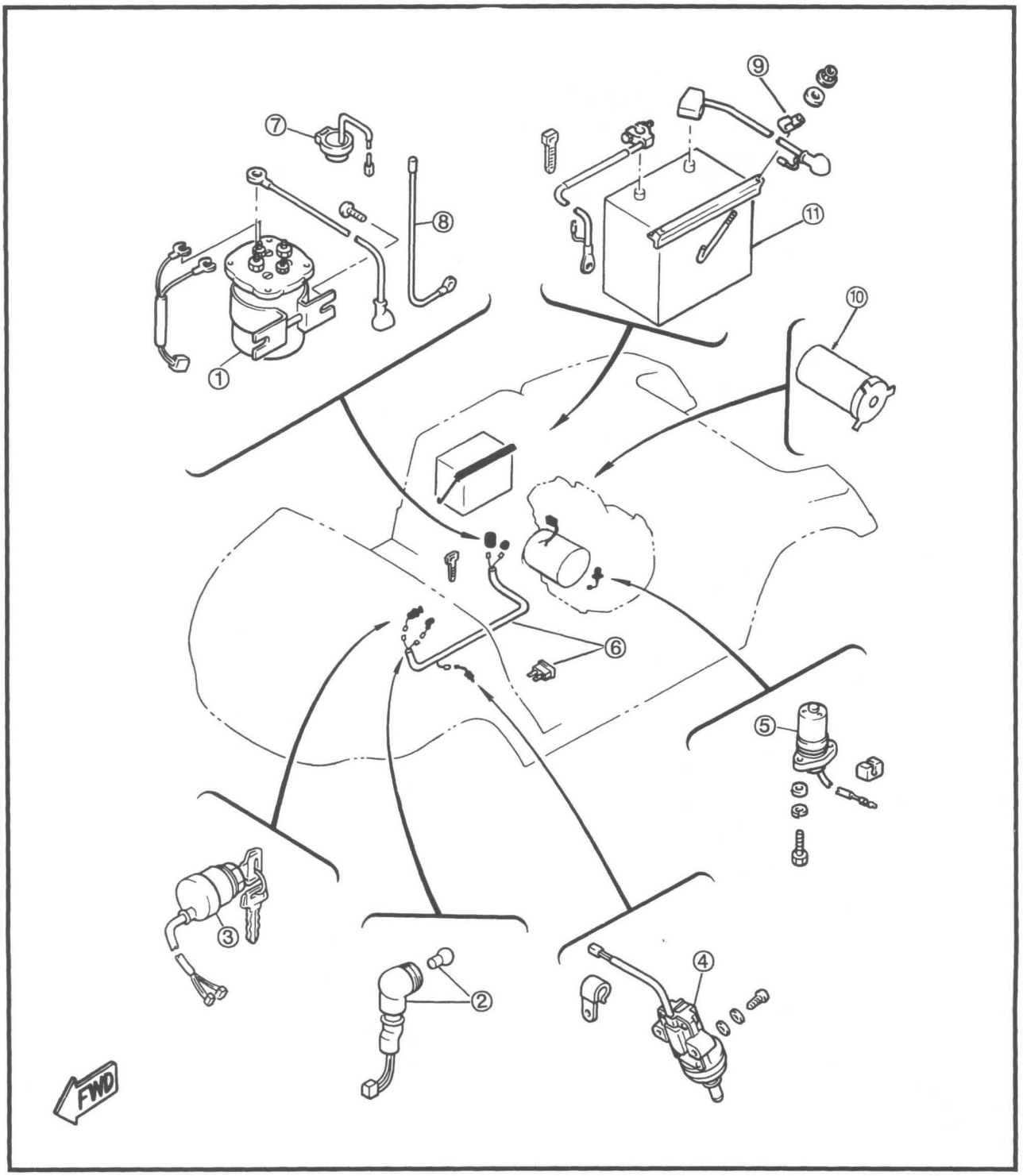

ELECTRICAL COMPONENTS

① Pickup coil
② Flywheel
③ Ignition coil
④ Ignitor unit
⑤ Voltage regulator
⑥ Starter/generator belt tensioner

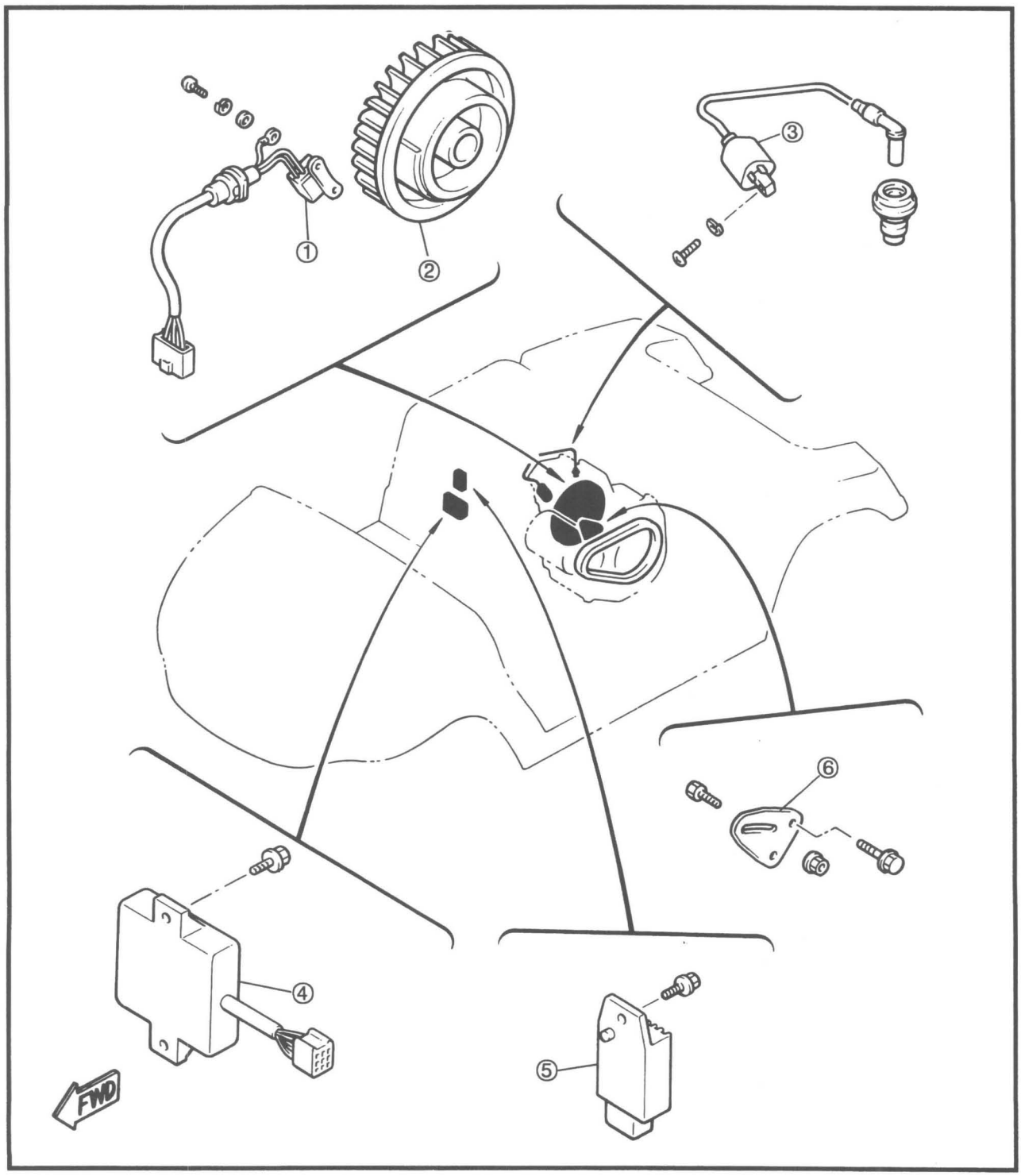

STARTING AND CHARGING SYSTEM

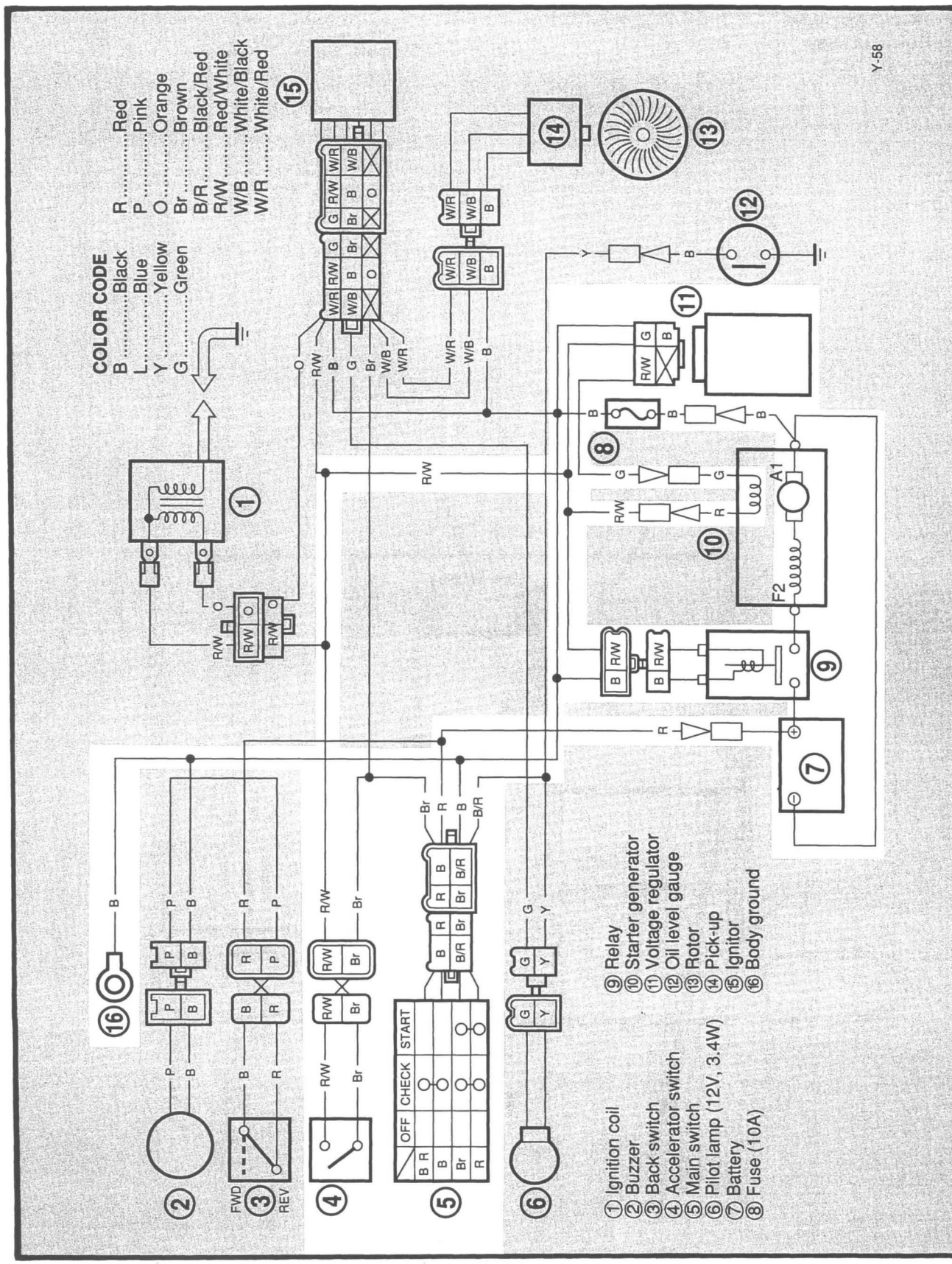

STARTING AND CHARGING SYSTEM COMPONENTS

① Main switch
② Accelerator stop switch
⑧ Voltage regulator
⑨ Starter-generator
⑩ Solenoid relay
⑪ Battery (12V)
⑫ Fuse

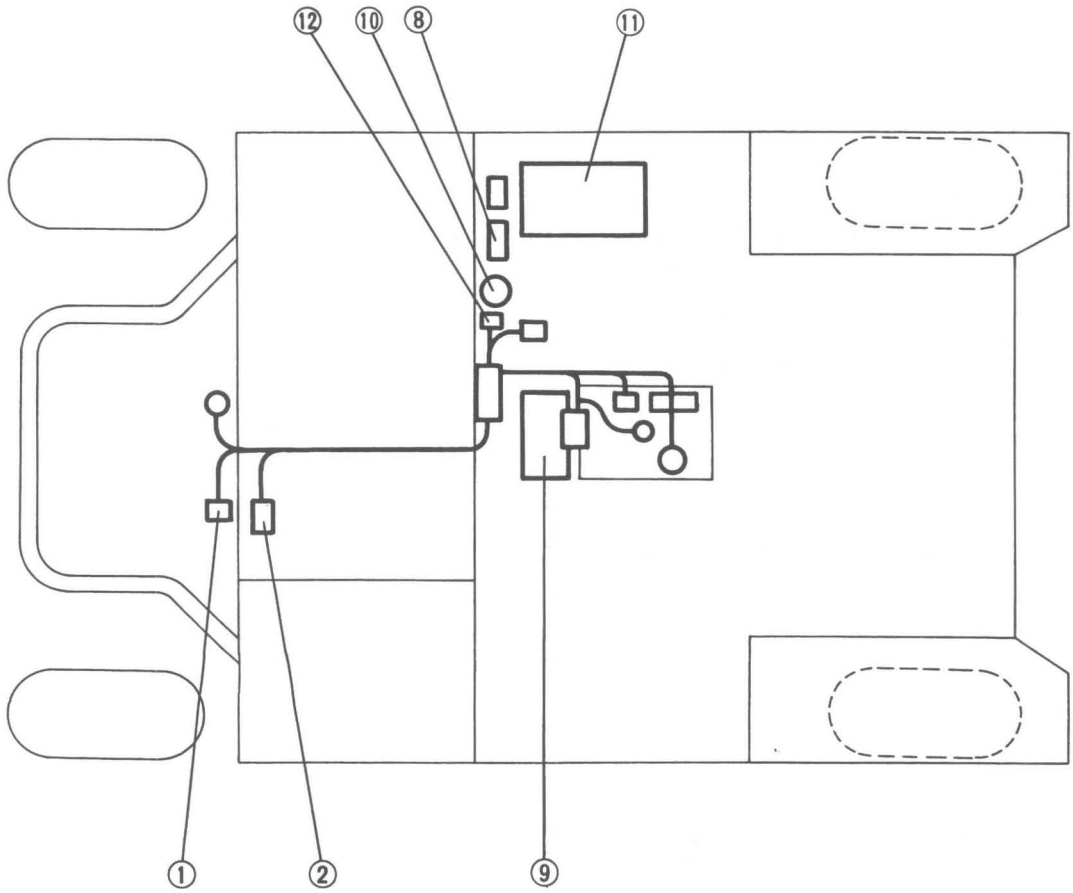

TROUBLESHOOTING

THE STARTER DOES NOT TURN

Procedure

Check:

1. Battery
2. Fuse
3. Main switch
4. Accelerator stop switch
5. Starter-generator
6. Solenoid relay
7. Wiring connection

NOTE:

- Remove the following parts before troubleshooting.
  1) Seat
  2) Service lid
  3) Drink holder insert.
- Use the following special tools in this troubleshooting.

Pocket Tester: **YU-3112-C, 90890-03112**	**Hydrometer:** **YU-03036, 90890-03036**

1. Battery

- Check the battery condition. Refer to CHAPTER 2 "BATTERY INSPECTION" section.

Specific Gravity:
1.260 at 20°C (68°F)
Voltage:
12V

INCORRECT →

- Refill battery fluid.
- Clean battery terminals.
- Recharge or replace battery.

↓ CORRECT

2. Fuse

- Remove the fuse.
- Connect the Pocket Tester (Ω x 1) to the fuse.
- Check the fuse for continuity.

NO CONTINUITY →

Replace fuse.

↓ CONTINUITY

*

*

3. Main switch

- Disconnect the main switch coupler from the wireharness.
- Connect the Pocket Tester (Ω x 1) to the main switch.

Tester (+) Lead → Red Lead ①
Tester (–) Lead → Brown Lead ②

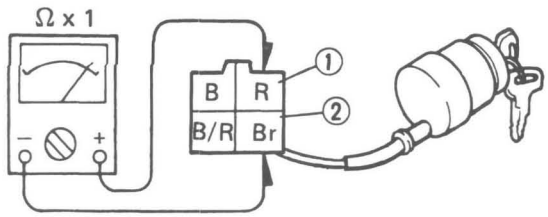

- Turn the main switch to "ON", "CHECK" and "OFF".
- Check the main switch for continuity.

Switch position	Good condition	Bad condition		
OFF	×	○	×	○
CHECK	×	○	×	○
ON	○	×	×	○

○: Continuity ×: No continuity

BAD CONDITION → Replace main switch.

GOOD CONDITION

4. Accelerator stop switch

- Disconnect the accelerator stop switch leads from the wireharness.
- Connect the Pocket Tester (Ω x 1) to the accelerator stop switch.

Tester (+) Lead → Brown Lead ①
Tester (–) Lead → Red/White Lead ②

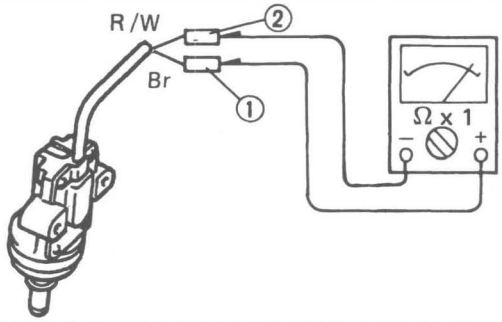

- Push the accelerator pedal.
- Check the accelerator stop switch for continuity.

Accelerator Pedal Position	Good Condition	Bad Condition		
Push	○	○	×	×
Free	×	○	○	×

○: Continuity x: No continuity

BAD CONDITION

Replace accelerator stop switch.

GOOD CONDITION

5. Starter-generator

- Connect the battery positive terminal ① and starter-generator terminal F2 ② using the jumper lead ③*.
- Connect the battery negative terminal ④ and starter-generator terminal A1 ⑤ using the jumper lead ③*.
- Check the starter-generator operation.

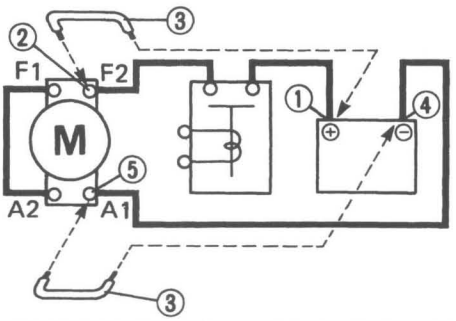

*

⚠WARNING

- **A wire for the jumper lead must have at least the equivalent capacity of the battery lead or the jumper lead may burn.**
- **This check is likely to produce sparks, so be sure that no flammable gas or fluids are in the vicinity.**

FAULTY

Repair and/or replace starter-generator.

OK

6. Solenoid relay

- Disconnect the solenoid relay leads (Red/White, Black).
- Connect the battery positive terminal ① and solenoid relay lead (Red/White) ② using the jumper lead ③.
- Connect the battery negative terminal ④ and solenoid relay lead (Black) ⑤ using the jumper lead ③.
- Check the starter-generator operation.

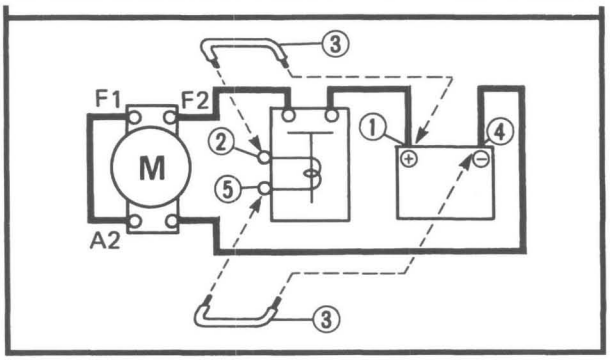

FAULTY

Replace solenoid relay.

OK

7. Wiring connection

- Check the entire starting system for connections.
  Refer to "STARTING AND CHARGING SYSTEM DIAGRAM" on page 7-5.

THE BATTERY IS NOT CHARGED

Procedure

Check:

1. Battery
2. Charging voltage
3. Charging coil resistance
4. Wiring connection

NOTE:

- Remove the following parts before troubleshooting.
  1) Seat

- Use the following special tools in this troubleshooting.

Pocket Tester: **YU-3112-C, 90890-03112**	**Hydrometer:** **YU-03036, 90890-03036**

1. Battery

- Check the battery condition.
  Refer to CHAPTER 2 "BATTERY INSPECTION" section.

Specific Gravity:
1.260 at 20°C (68°F)
Voltage:
12V

INCORRECT →

- Refill battery fluid.
- Clean battery terminals.
- Recharge or replace battery.

↓ GOOD CONDITION

2. Charging Voltage

- Connect the Pocket Tester (DC20V) to the battery.

Tester (+) Lead → Battery Positive Terminal
Tester (–) Lead → Battery Negative Terminal

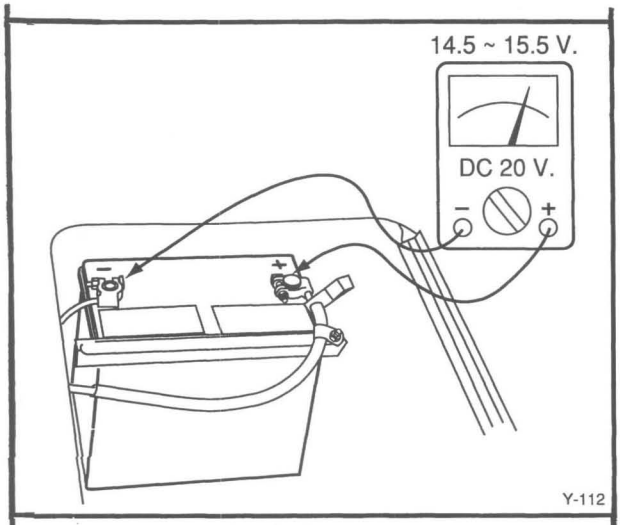

- Remove the drive belt.
- Start the engine and accelerate to about 2,500 r/min.*
- Measure the charging voltage.

Charging Voltage:
14.5 ~ 15.5V at 2,500 r/min

MEETS SPECIFICATION → Replace battery.

OUT OF SPECIFICATION ↓

*

⚠ WARNING

Be sure the drive belt is removed when starting the engine. The speed limiter will not function, so you must regulate engine speed with the throttle.

3. Charging coil resistance

- Disconnect the starter-generator thin leads (Red, Green).
- Connect the Pocket Tester (Ω x 1) to the starter-generator thin leads.

Tester (+) Lead → Red Lead
Tester (–) Lead → Green Lead

- Measure the charging coil resistance.

Charging Coil Resistance:
4.5 ~ 5.5Ω at 20° C (68°F)

OUT OF SPECIFICATION → Repair and/or replace starter-generator.

MEETS SPECIFICATION ↓

4. Wiring connection

- Check the entire starting system for connections.
  Refer to "STARTING AND CHARGING SYSTEM DIAGRAM on page 7-5.

POOR CONNECTION → Correct.

CORRECT ↓

Repair and/or replace voltage regulator.

STARTER-GENERATOR

① Brush cover
② Bearing
③ Brush holder
④ Brush-spring
⑤ Woodruff key
⑥ Armature assembly
⑦ Brush
⑧ Lead wire
⑨ Bracket (Brush side)
⑩ Terminal
⑪ Yoke
⑫ Bearing holder
⑬ Bracket (Puller side)

NOTE:

* The drain slot in the brush cover having a drain slit must face downward.

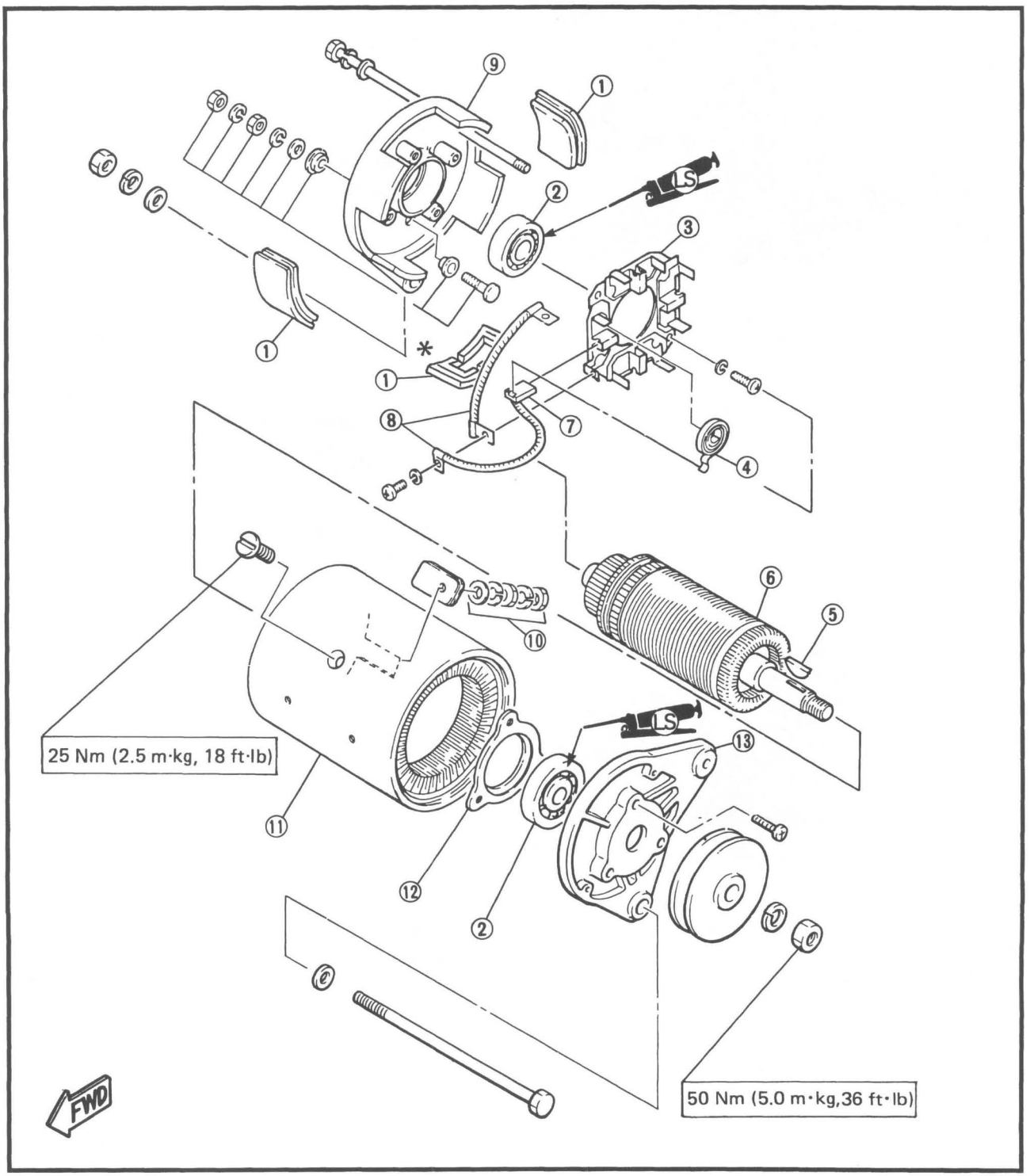

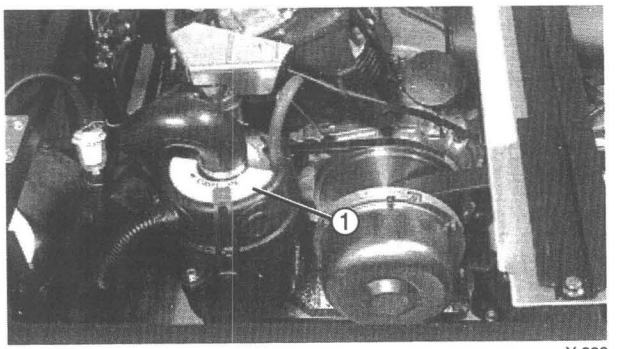

Y-392

Removal

1. Remove the seat.
2. Disconnect the battery negative lead.
3. Remove:
   - Air cleaner case ①
     Refer to CHAPTER 2 "ENGINE BRACKET ADJUSTMENT" section.

Y-329

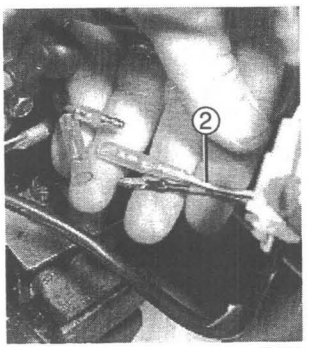

Y-330

4. Disconnect:
   - Starter-generator lead to relay (Red) ①
   - Starter-generator lead to neg battery post (Black)
   - Start-generator lead to fuse (Black)
   - Starter-generator charging coil leads (Red, Green) ②

5. Attach:
   - Primary Sheave Holder to primary sheave.

	**Primary Sheave Holder:** **YS-1880-A, 90890-01701**

6. Loosen:
   - Pulley nut (starter-generator) while holding primary sheave in place.

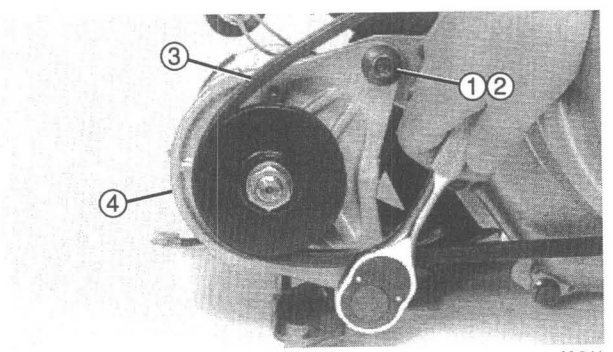

Y-341

7. Remove:
   - Bolts and nuts ①, ②
   - V-belt ③
   - Starter-generator ④

Disassembly

1. Remove:
   - Pulley nut
   - Washer
   - Belt pulley
   - Woodruff key

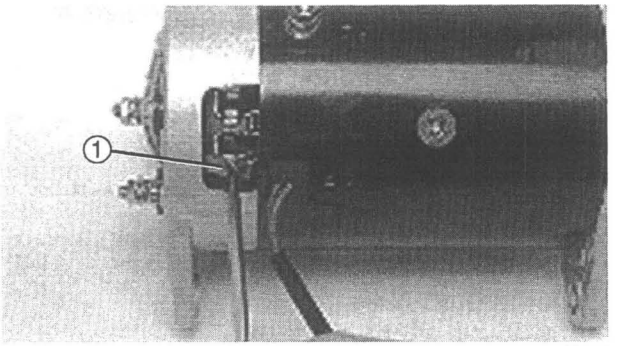

Y-393

2. Remove:
   - Brush covers
   - Lead connecting screws ①

CAUTION

Hold brush holder tabs in place with pliers when removing stubborn lead connecting screws to avoid twisting tabs.

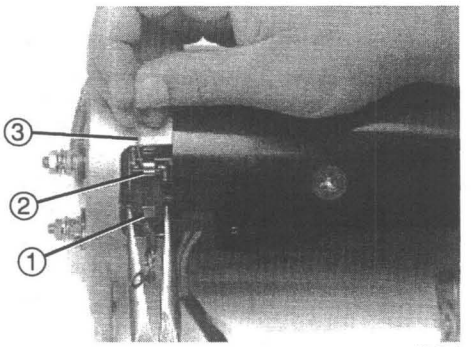

Y-394

3. Remove:
   - Brush ①
     Remove it while pulling up the brush spring ② with a spring puller (made from steel wire) ③ or a bent paper clip.

CAUTION

Do not pull wire lead of brush. Use care when removing brushes, they are easily damaged.

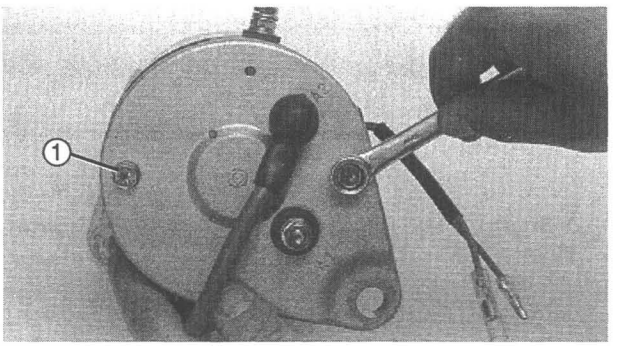

Y-395

4. Remove:
   - Bolts ①
5. Separate the yoke, armature and bracket (brush side).

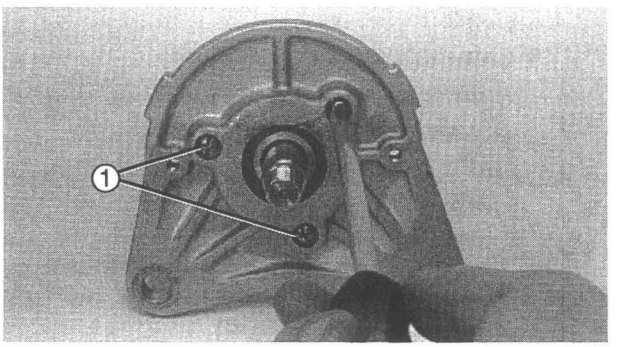

Y-396

6. Remove:
   - Screws ①
7. Separate the bracket (pulley side) and armature assembly.

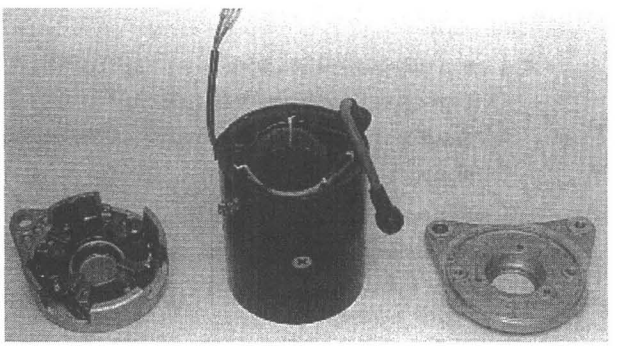

Y-397

Inspection

1. Clean the interior of the yoke and brackets with compressed air.
2. Inspect:
   - Outer surface (yoke and brackets)
     Cracks/Damage → Replace.

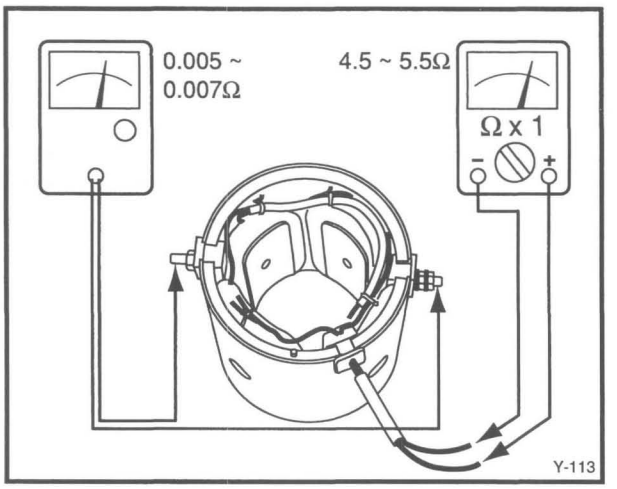

3. Inspect:
   - Yoke
     Defects → Replace.

Yoke inspection steps:
- Connect the Low Reading Ohmmeter to the yoke terminal F1, F2.
- Connect the Pocket Tester to the charging coil leads (Red, Green).
- Measure the field coil resistance (Series and Shunt).

Low Reading Ohmmeter:
YU-91026, 90890-03064
Pocket Tester:
YU-3112-C, 90890-03112

Field Coil Resistance:
Series (F1 – F2):
0.005 ~ 0.007Ω at 20°C (68°F)
Shunt (Red – Green):
4.5 ~ 5.5Ω at 20°C (68°F)

- If the resistance is incorrect, replace the yoke.

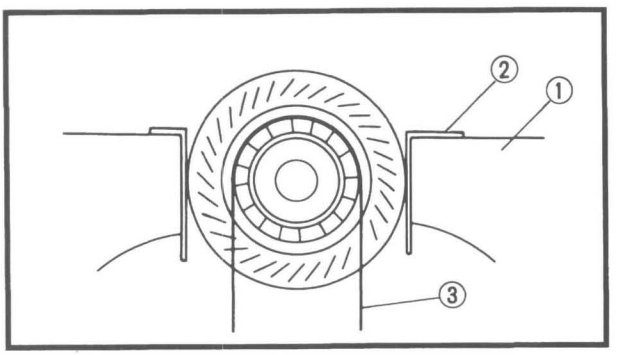

4. Inspect:
   - Commutator (Outer surface)
     Hold the armature in a vise ① between copper or aluminium plates ② .
     Dirty → Clean with #600 grit emery cloth ③ .

CAUTION

Hold armature lightly between padded vise jaws to avoid damaging armature.

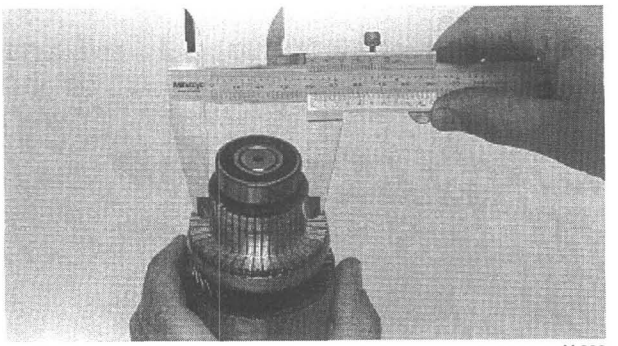
Y-398

5. Measure:
   - Commutator (Diameter)
     Out of specification → Replace.
     Measure the diameter of the commutator as shown.
     Out of specification → Replace.

Wear Limit (Mimimum Diameter):
39 mm (1.54 in)

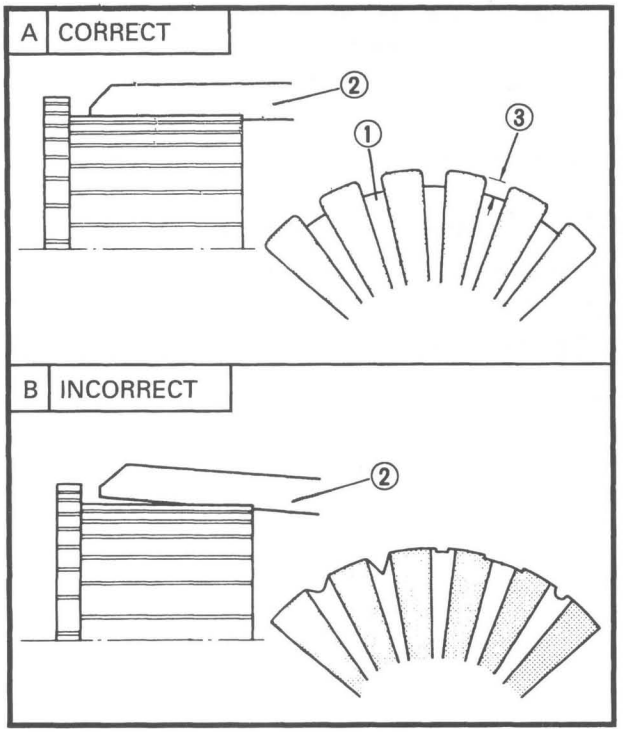

6. Measure:
   - Mica ① (Insulation depth)
     (between commutator segments)
     Out of specification → Scrape mica to proper limits.
     Use a hacksaw blade ② that is ground to fit.

Mica Undercut ③:
Limit: 0.3 mm (0.012 in)

NOTE:
- The mica insulation of the commutator must be undercut to ensure proper operation of the commutator.
- Carefully clean between the segments after the above steps.

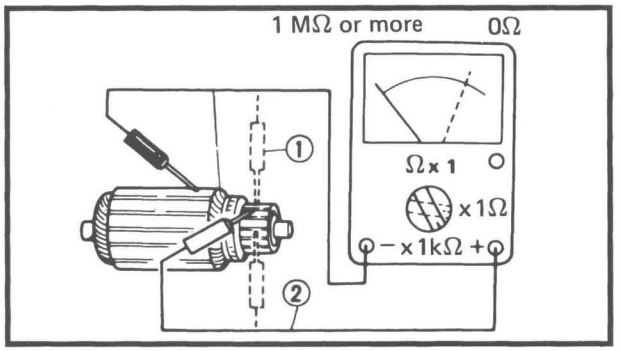

7. Inspect:
   - Armature coil (insulation/continuity)
     Defects → Replace armature.

Armature coil inspecting steps:
- Connect the Pocket Tester for continuity check ① and insulation check ② .
- Measure the armature coil resistances.

Pocket Tester:
YU-3112-6, 90890-03112

Armature Coil Resistances:
Continuity Check ①:
0Ω at 20°C (68°F)
Insulation Check ② :
More than 1MΩ at 20°C (68°F)

- If the resistance is incorrect, replace the armature.

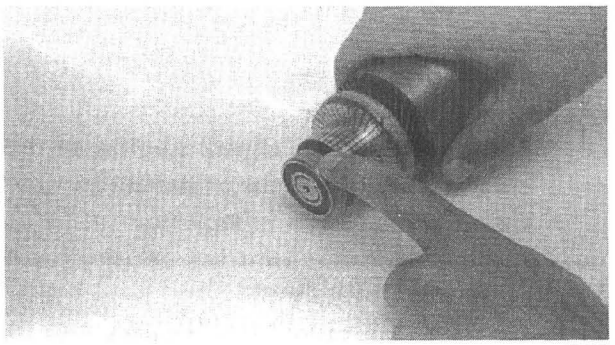
Y-399

8. Check:
   - Bearing movement
     Rotate with fingers.
     Roughness/Wear → Replace.

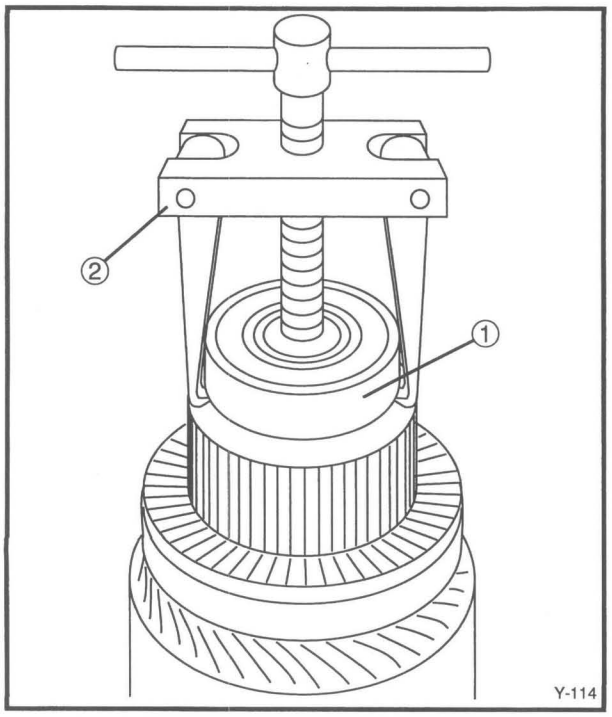

Bearing replacement steps:

- Remove the bearing ① with a bearing puller ②.
- Install the new bearing.

CAUTION

Do not strike the outer race ① or balls of the bearing. Contact should be made only with the center race ②.

C PRESS

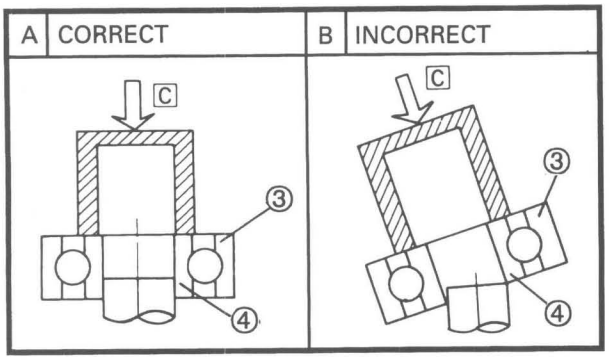

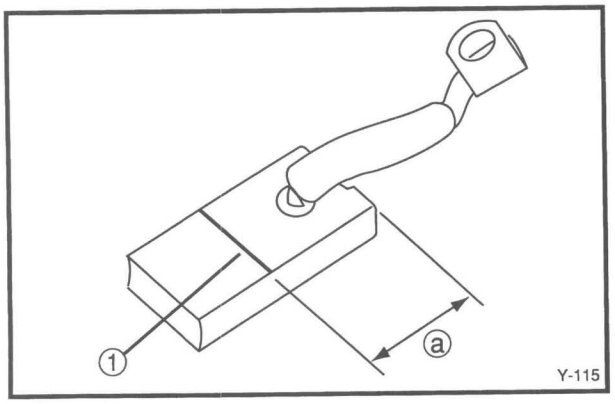

9. Measure:
   - Brush length
     Out of specification → Replace.

Minimum Brush Length ⓐ:
16 mm (0.63 in)

① Wear indicator

Assembly

Reverse the "Disassembly" procedure.
Note the following points:

1. Measure:
   - Brush spring force
     Use a spring scale ①.
     Pull the scale and check reading as the brush spring just comes off the brush.
     Out of specification → Replace.

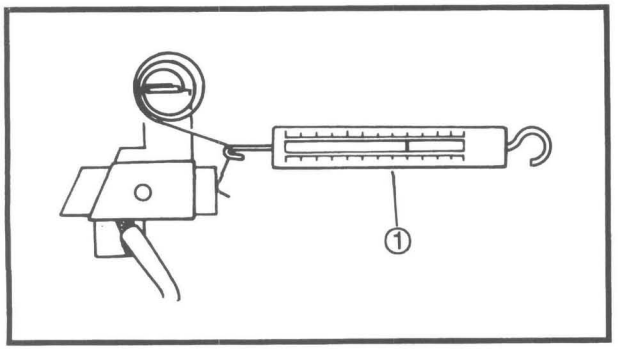

Brush Spring Force:
300 ~ 500 g (10.6 ~ 17.6 oz)

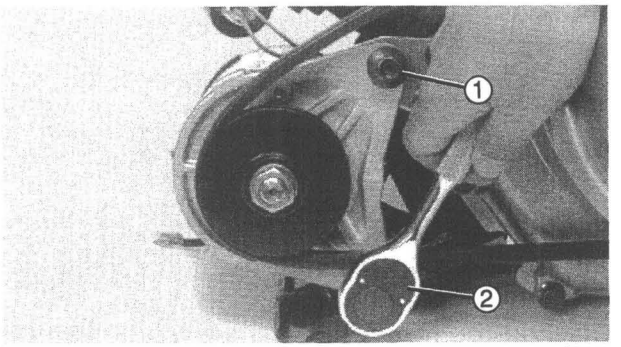

Y-400

Installation

Reverse the "Removal" procedure.

Note the following points:

1. Adjust:
   - Starter belt tension
     Refer to CHAPTER 2 "STARTER BELT INSPECTION" section.

Starter Belt Tension:
8 ~ 12 mm/10 kg
(0.31~ 0.47 in/22 lb)

2. Tighten:
   - Bolts and nuts ①, ②

Belt Tension Bolt-Nut ① :
14 Nm (1.4 m • kg, 10 ft • lb)
Starter Holding Bolt-Nut ② :
53 Nm (5.3m • kg, 38 ft • lb)

3. Tighten:
   - Pulley nut
     Tighten it while holding the primary sheave with Primary Sheave Holder.

Pulley Securing Nut:
50 Nm (5.0m • kg, 35 ft • lb)

Primary Sheave Holder:
YS-1880-A, 90890-01701

SOLENOID RELAY

Function

The solenoid coil, when activated by closing the engine stop switch, closes the solenoid contacts, thus providing the starter with current.
It also acts as a safety device, preventing the vehicle from abruptly starting when the main switch is operated.

Inspection

1. Remove:
   - Seat
   - Drive belt
2. Turn the main switch to "ON" ①.
3. Check:
   - Solenoid relay (Clicking)
     Press the accelerator pedal to close the engine stop switch.
     If clicking → Check for continuity between the two contact posts with Pocket Tester, while the solenoid is activated. If there is no continuity, replace the relay.
     Not clicking → Measure coil resistance in solenoid.
4. Disconnect:
   - Solenoid coil leads (Black, Red/White)
5. Measure:
   - Coil resistance
     Use the Pocket Tester ②.
     Out of specification → Replace.
     Within specification → Inspect starting circuit.
     Refer to "TROUBLESHOOTING" section.

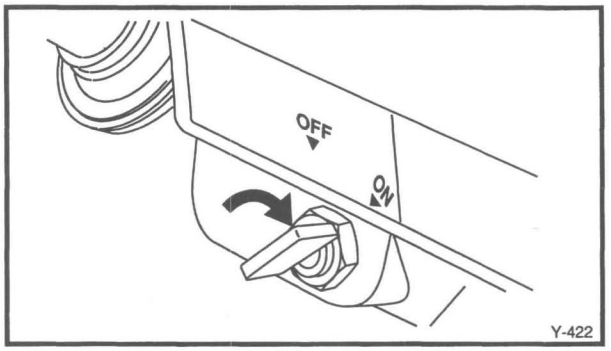

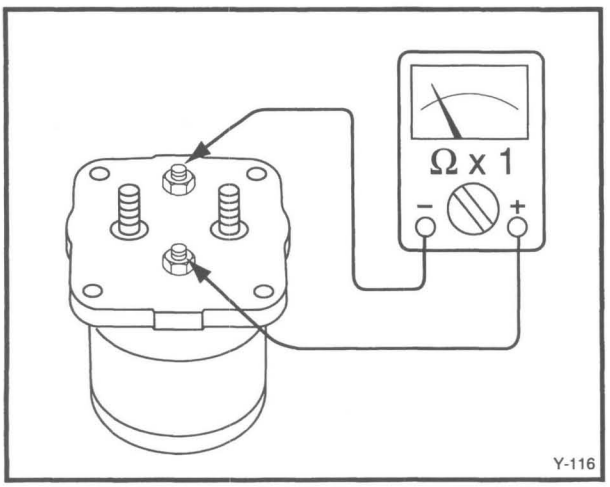

Pocket Tester:
YU-3112-C, 90890-03112

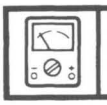

Solenoid Coil Resistance:
21Ω ± 10% at 20° C (68° F)

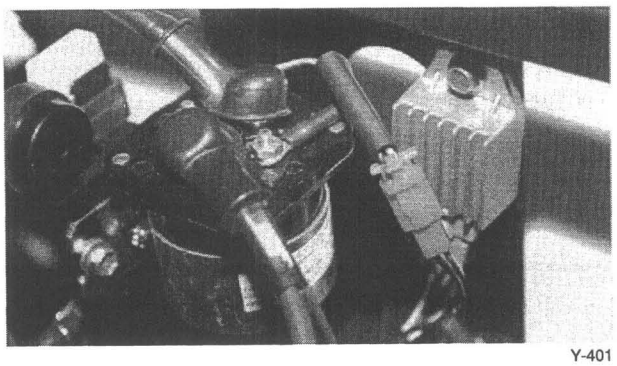
Y-401

6. Check:
   - Connection of leads to main solenoid terminals.
     Looseness → Tighten.

	Terminal Nut: **6 Nm (0.6 m • kg, 4.3 ft • lb)**

7. Replace:
   - Drive belt

Removal

1. Disconnect:
   - Battery positive lead
   - Leads to solenoid terminals
2. Remove:
   - Solenoid relay

Installation

Reverse the "Removal" procedure.
Note the following points.

1. Install:
   - Solenoid relay ①
2. Connect:
   - Lead from starter-generator (Red)
   - Leads to solenoid coil (Black, Red/White)
   - Battery negative lead (Black)

VOLTAGE REGULATOR

Generator Voltage Inspection

1. Remove:
   - Drive belt
     Refer to CHAPTER 2 "DRIVE BELT INSPECTION" section.
2. Connect the Pocket Tester (DC20V) to the battery.

	Pocket Tester: **YU-3112-C, 90890-03112**

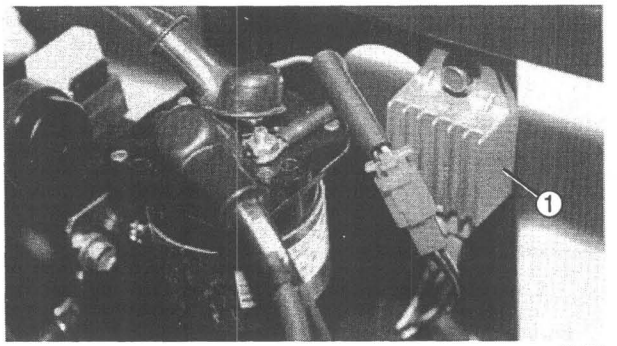

Y-402

3. Start the engine and accelerate to about 2,500 r/min.
4. Measure:
   - Generator voltage

     Out of specification → See page 7-11 for troubleshooting.

	Generator Voltage: **14 ~ 15V**

① Voltage regulator

NOTE:

The voltage regulator is solid state and non-adjustable. Refer to page 7-11 "THE BATTERY IS NOT CHARGED" for troubleshooting procedures.

IGNITION SYSTEM

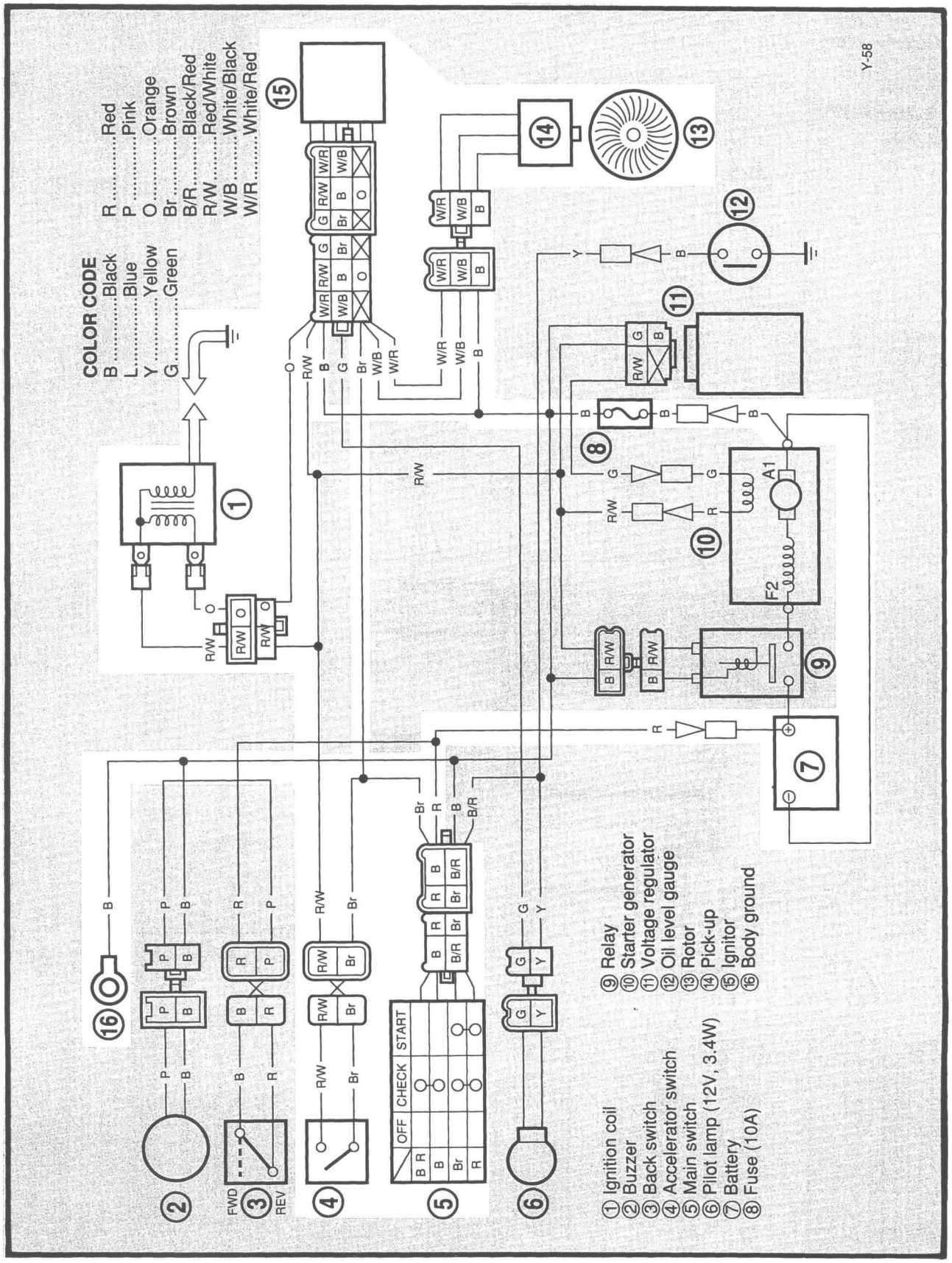

IGNITION SYSTEM COMPONENTS

① Main switch
② Accelerator stop switch
③ Ignition coil
④ Spark plug
⑤ Ignitor unit
⑥ Pickup coil
⑦ Rotor
⑪ Battery (12V)
⑫ Fuse

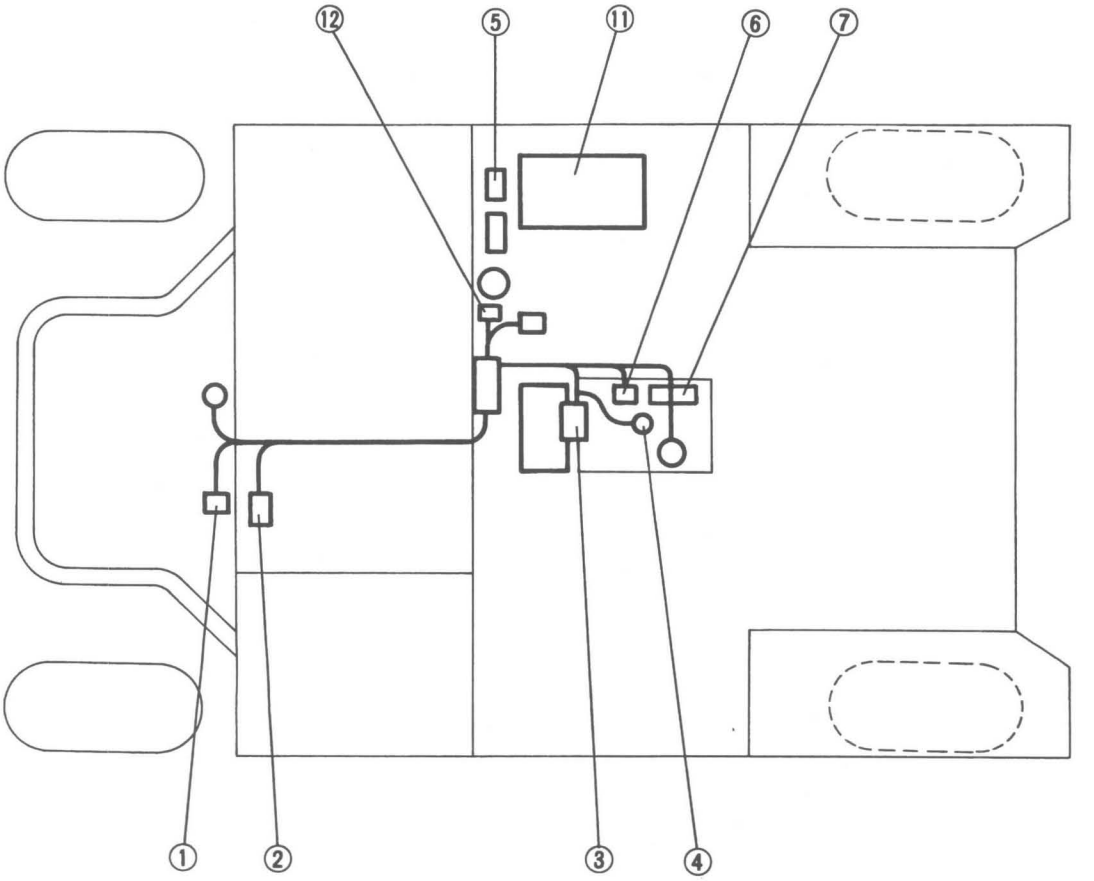

TROUBLESHOOTING

NO SPARK OR WEAK SPARK.

Procedure

Check:

1. Spark plug
2. Ignition spark gap
3. Spark plug cap resistance
4. Ignition coil resistance
5. Pickup coil resistance
6. Wiring connection

NOTE:

- Remove the following parts before troubleshooting.
  1) Seat
- Use the following special tool in this troubleshooting.

Pocket Tester:
YU-3112-C, 90890-03112

Dynamic Spark Tester:
YM-34487, 90890-03144

1. Spark plug

- Check the spark plug condition.
- Check the spark type.
- Check the spark plug gap.
  Refer to CHAPTER 2 "SPARK PLUG INSPECTION" section.

Standard Spark Plug:
BPR2ES or BPR4ES

Spark Plug Gap:
0.7 ~ 0.8 mm (0.028 ~ 0.032 in)

INCORRECT → Repair or replace spark plug.

CORRECT ↓

2. Ignition spark gap

- Disconnect the spark plug cap from spark plug.
- Connect the Dynamic Spark Tester ① as shown.

②Spark plug cap
③Spark plug

- Turn the main switch to "ON".

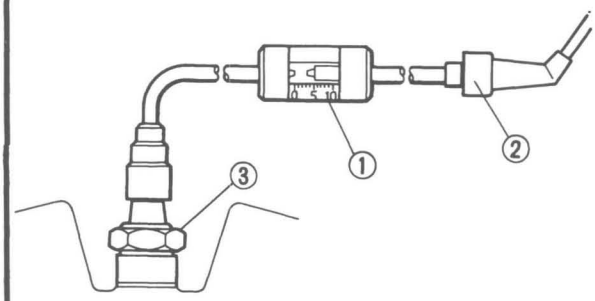

- Check the ignition spark gap.
- Start engine, and increase spark gap until misfire occurs.

Minimum Spark Gap:
6.0 mm (0.24 in)

MEETS SPECIFICATION → Ignition system is good.

OUT OF SPECIFICATION OR NO SPARK ↓

3. Spark plug cap resistance

- Remove the spark plug cap.
- Connect the Pocket Tester (Ω x 1k) to the spark plug cap.

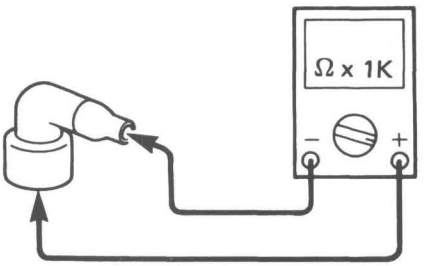

- Check the spark plug cap for specified resistance.

Spark Plug Cap Resistance:
3.75 ~ 6.25 kΩ at 20° C (68° F)

OUT OF SPECIFICATION → Replace spark plug cap.

MEETS SPECIFICATION ↓

4. Ignition coil resistance

- Disconnect the ignition coil coupler from the wireharness.
- Connect the Pocket Tester to the ignition coil.

Primary Coil A :
Tester (+) Lead → Red/White Lead
Tester (–) Lead → Orange Lead

Secondary Coil B :
Tester (+) Lead → Red/White Lead
Tester (–) Lead → Spark Plug Lead

A

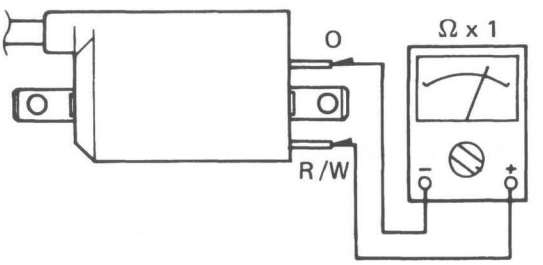

B

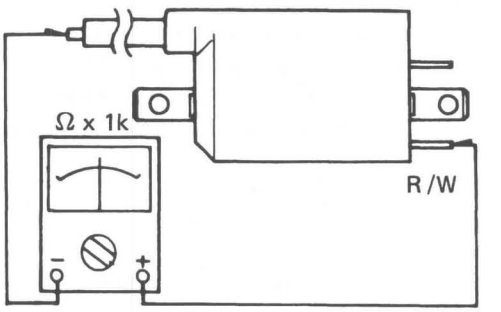

- Measure the primary and secondary coil resistances.

Primary Coil Resistance:
2.6Ω ± 20% at 20° C (68° F)
Secondary Coil Resistance:
11.9kΩ ± 20% at 20° C (68° F)

OUT OF SPECIFICATION → Replace ignition coil.

BOTH MEET SPECIFICATIONS ↓

5. Pickup coil resistance

- Disconnect the pickup coil coupler from the wireharness.
- Connect the Pocket Tester (Ω x 100) to the pickup coil terminal.

Tester (+) Lead → White/Red Lead
Tester (–) Lead → White/Black Lead

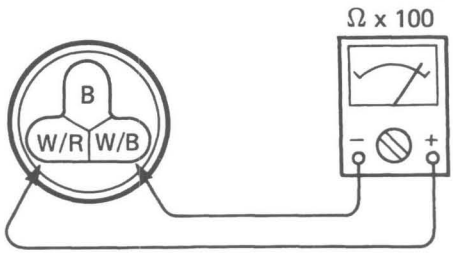

- Measure the pickup coil resistance.

Pickup Coil Resistance:
350Ω ± 20% at 20° C (68° F)
(White/Red – White/Black)

OUT OF SPECIFICATION → Replace pickup coil.

MEETS SPECIFICATION ↓

6. Wiring connection

Check the entire ignition system for connections.
Refer to "IGNITION SYSTEM DIAGRAM" on page 7-25.

POOR CONNECTION → Correct.

CORRECT ↓

Replace ignitor unit.

SIGNAL SYSTEM

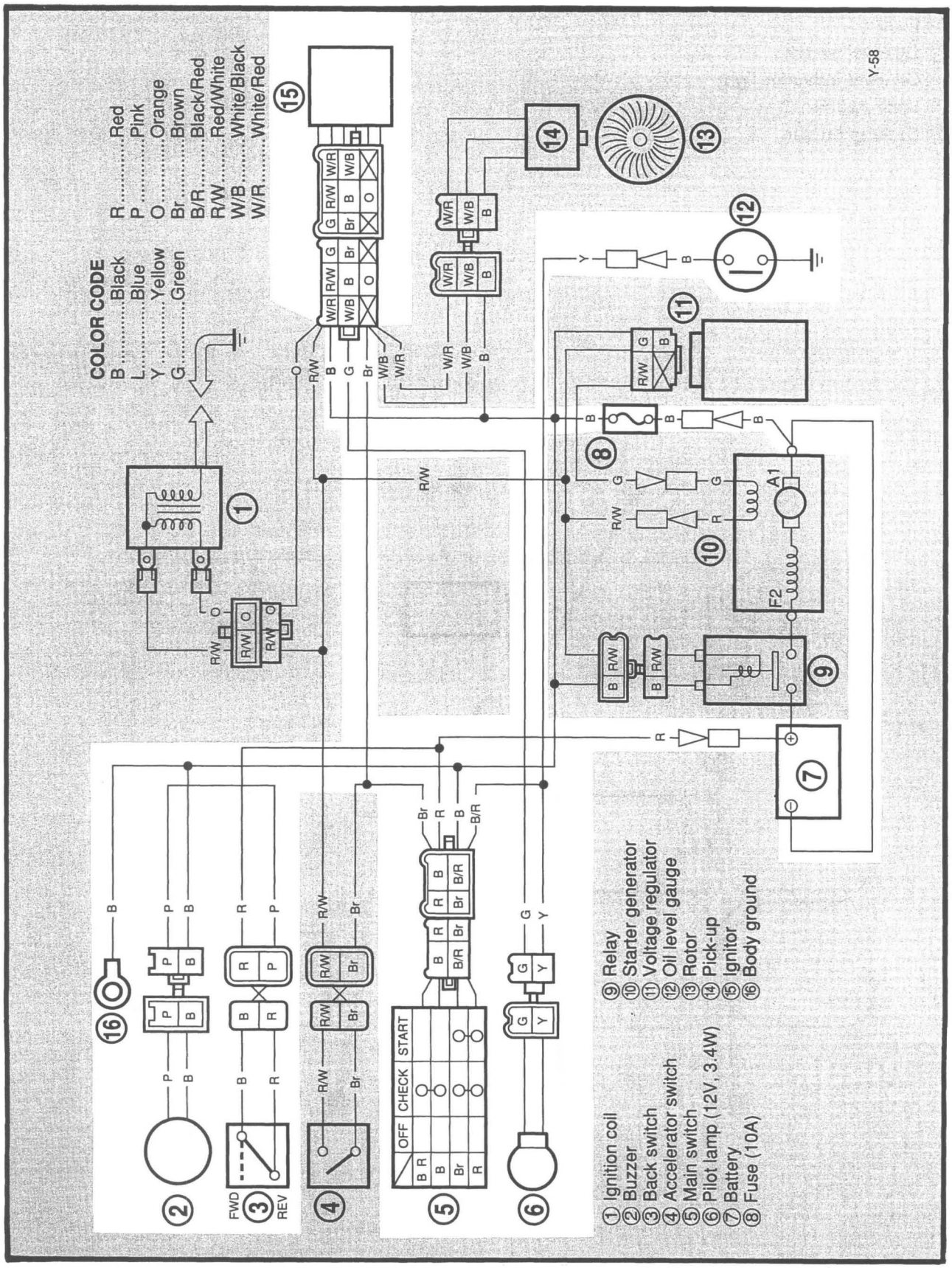

SIGNAL SYSTEM COMPONENTS

① Main switch
⑤ Ignitor unit
⑪ Battery (12V)
⑫ Fuse
⑬ Oil level switch
⑭ Oil level indicator light
⑮ Back switch
⑯ Back-up buzzer

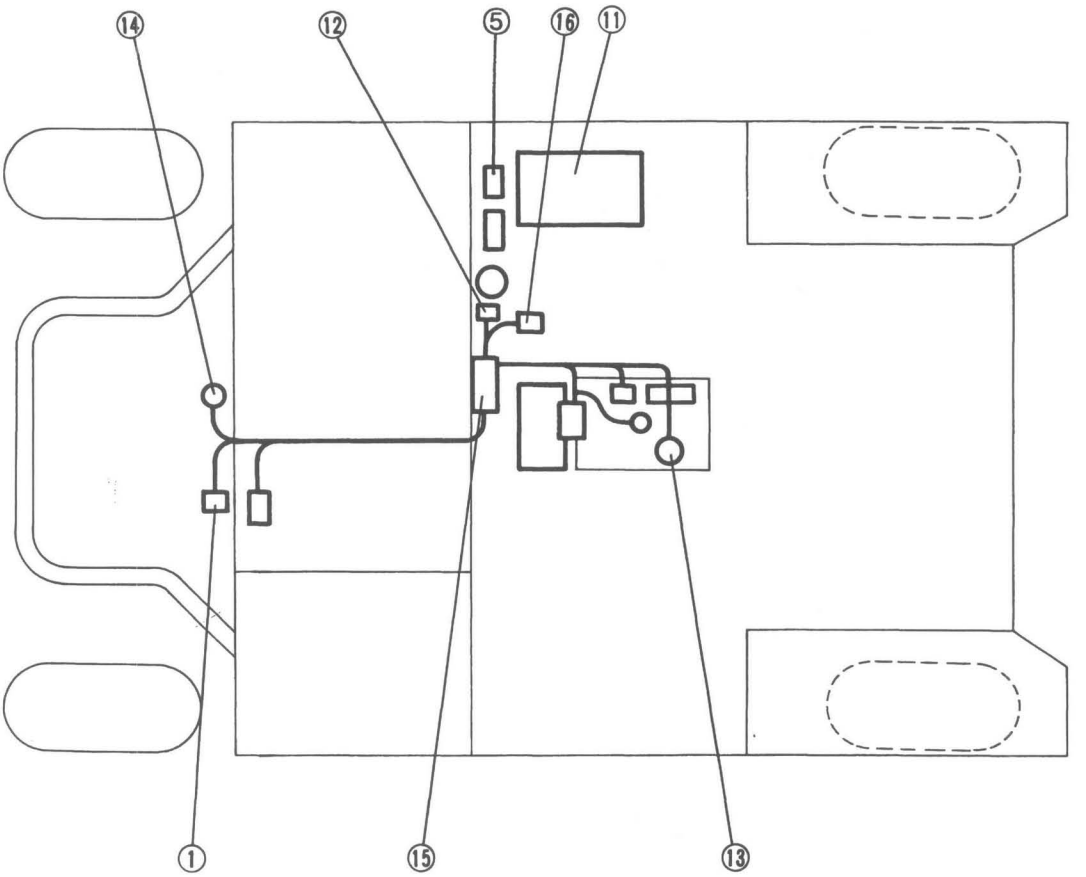

TROUBLESHOOTING

THE OIL LEVEL INDICATOR LIGHT DOES NOT COME ON

Procedure

Check:

1. Bulb
2. Bulb socket
3. Oil level switch
4. Voltage to lamp
5. Wiring connection
6. Lamp check

NOTE:

- Remove the following parts before troubleshooting.
  1) Seat
  2) Drink holder insert
- Use the following special tools in this troubleshooting.

Pocket Tester: **YU-3112-C, 98090-03112**	**Hydrometer:** **YU-03036, 90890-03036**

1. Bulb

- Remove the bulb.
- Connect the Pocket Tester (Ω x 1) to the bulb.

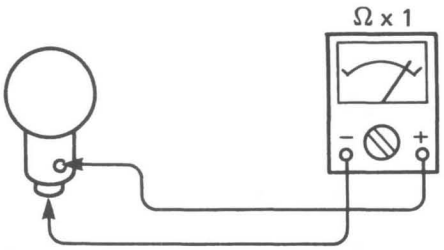

- Check the bulb for continuity.

NO CONTINUITY → Replace bulb.

CONTINUITY ↓

2. Bulb socket

- Disconnect the indicator light leads (Green, Yellow).
- Connect the Pocket Tester (Ω x 1) to the leads.

Tester (+) Lead → Green Lead
Tester (–) Lead → Yellow Lead

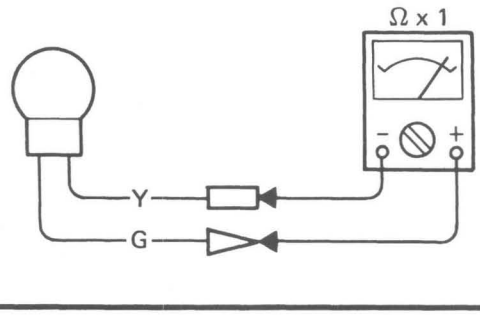

- Check the bulb socket for continuity.

NO CONTINUITY → Replace bulb socket.

CONTINUITY ⇩

3. Oil level switch

- Disconnect the oil level switch lead.
- Connect the Pocket Tester (Ω x 1) to the oil level switch lead (Black).

Tester (+) Lead → Black Lead
Tester (–) Lead → Ground (Engine body)

- Turn the main switch to the "Check" position (halfway between "off" and "on").
- Check the oil level switch for continuity.
- Drain the engine oil.
  Refer to CHAPTER 2 "ENGINE OIL REPLACMENT" section.
- Check the oil level switch for continuity.

Oil level	Good condition	Bad condition		
Full	×	×	○	○
Empty	○	×	×	○

○: Continuity ×: No continuity

BAD CONDITION → Replace oil level switch.

GOOD CONDITION ⇩

4. Voltage to lamp

- Disconnect the indicator light leads (Green, Yellow).
- With main switch in "CHECK" position, check Green lead for voltage.

NO VOLTAGE → Replace ignitor unit.

GOOD CONDITION ⇩

*

*

5. Wiring connection

- Check the connections of the entire signal system.
  Refer to signal "SIGNAL SYSTEM WIRING DIAGRAM" on page 7-33.

POOR CONNECTION → Correct the connection.

CORRECT

6. Lamp check

- Turn the main switch to "CHECK" to verify repairs are satisfactory.

BULB DOESN'T LIGHT → Recheck wiring connections.

THE BACK-UP BUZZER DOES NOT OPERATE

Procedure

Check:

1. Battery
2. Fuse
3. Buzzer switch
5. Back-up buzzer
6. Wiring connection

NOTE:

- Remove the following parts before troubleshooting.
  1) Seat
- Use the following special tools in this troubleshooting.

Pocket Tester: **YU-3112-C, 90890-03112**	**Hydrometer:** **YU-03036, 90890-03036**

1. Battery

- Check the battery condition.
  Refer to CHAPTER 2 "BATTERY INSPECTION" section.

Specific Gravity:
1.260 at 20° C (68° F)
Voltage:
12V

INCORRECT →

- Refill battery fluid.
- Clean battery terminals.
- Recharge or replace battery.

↓ CORRECT

2. Fuse

- Remove the fuse.
- Connect the Pocket Tester (Ω x 1) to the fuse.
- Check the fuse for continuity.

NO CONTINUITY →

Replace fuse.

↓ CONTINUITY

*

*

3. Buzzer switch

- Disconnect the buzzer switch coupler.
- Connect the Pocket Tester (Ω x 1) to the buzzer switch coupler.

Tester (+) Lead → Red Lead
Tester (–) Lead → Pink Lead

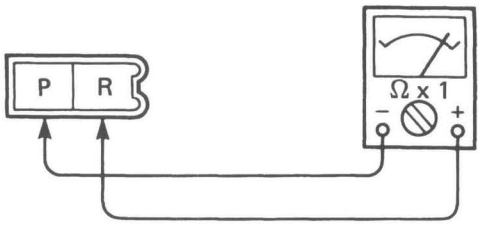

- Turn the shift lever "FORWARD" and "REVERSE " position.
- Check the buzzer switch for continuity.

Lever position	Good condition	Bad condition		
FORWARD	×	×	○	○
REVERSE	○	×	×	○

○: Continuity ×: No continuity

BAD CONDITION → Replace buzzer switch.

GOOD CONDITION

4. Back-up buzzer

- Disconnect the back-up buzzer leads.
- Connect jumper leads to the back-up buzzer leads (Black, Pink) and battery.

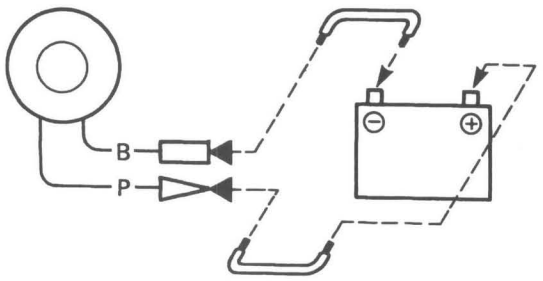

- Confirm the back-up buzzer sounds.

FAULTY → Replace back-up buzzer.

OK

*

*

5. Wiring connection
• Check the entire signal system for connection. Refer to "WIRING DIAGRAM" section.

ELECTRICAL FOR G14-E

G14-E WIRING DIAGRAM

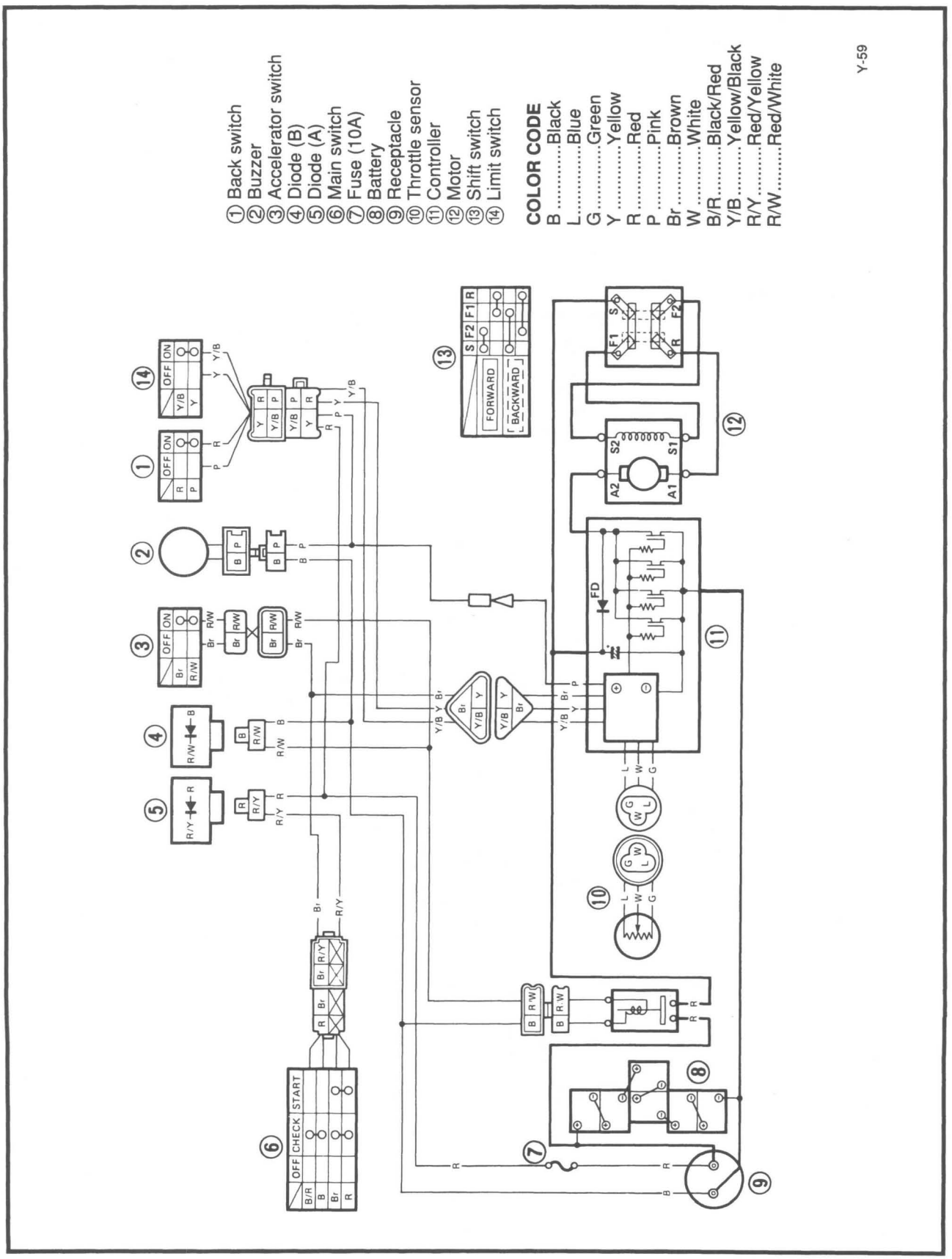

ELECTRICAL COMPONENT LOCATIONS

① Main switch
② Accelerator switch
③ Buzzer switch
④ Back-up buzzer
⑤ Forward-reverse switch
⑥ Traction motor
⑦ Cut-off switch
⑧ Speed controller
⑨ Throttle sensor
⑩ Charging receptacle
⑪ Fuse
⑫ Diodes
⑬ Solenoid relay
⑭ Batteries (6V x 6)

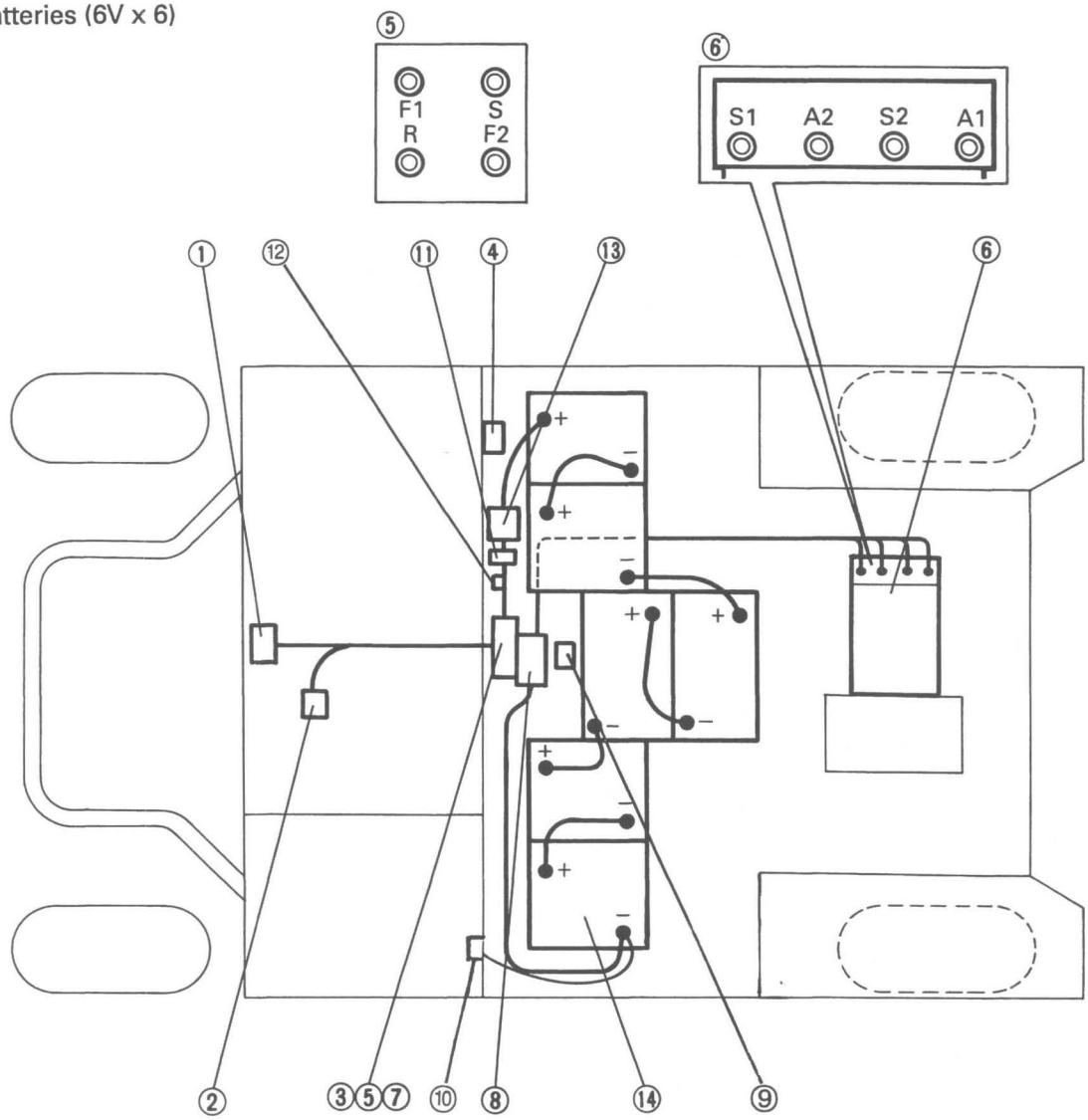

ELECTRICAL COMPONENTS

① Receptacle
② Relay assy
③ Rectifier
④ Buzzer
⑤ Wire harness
⑥ Wire harness
⑦ Battery charger
⑧ Wire harness
⑨ Clamp
⑩ Battery fitting plate
⑪ Fitting screw
⑫ Wire lead
⑬ Accelerator stop switch
⑭ Main switch
⑮ Fuse (10A)

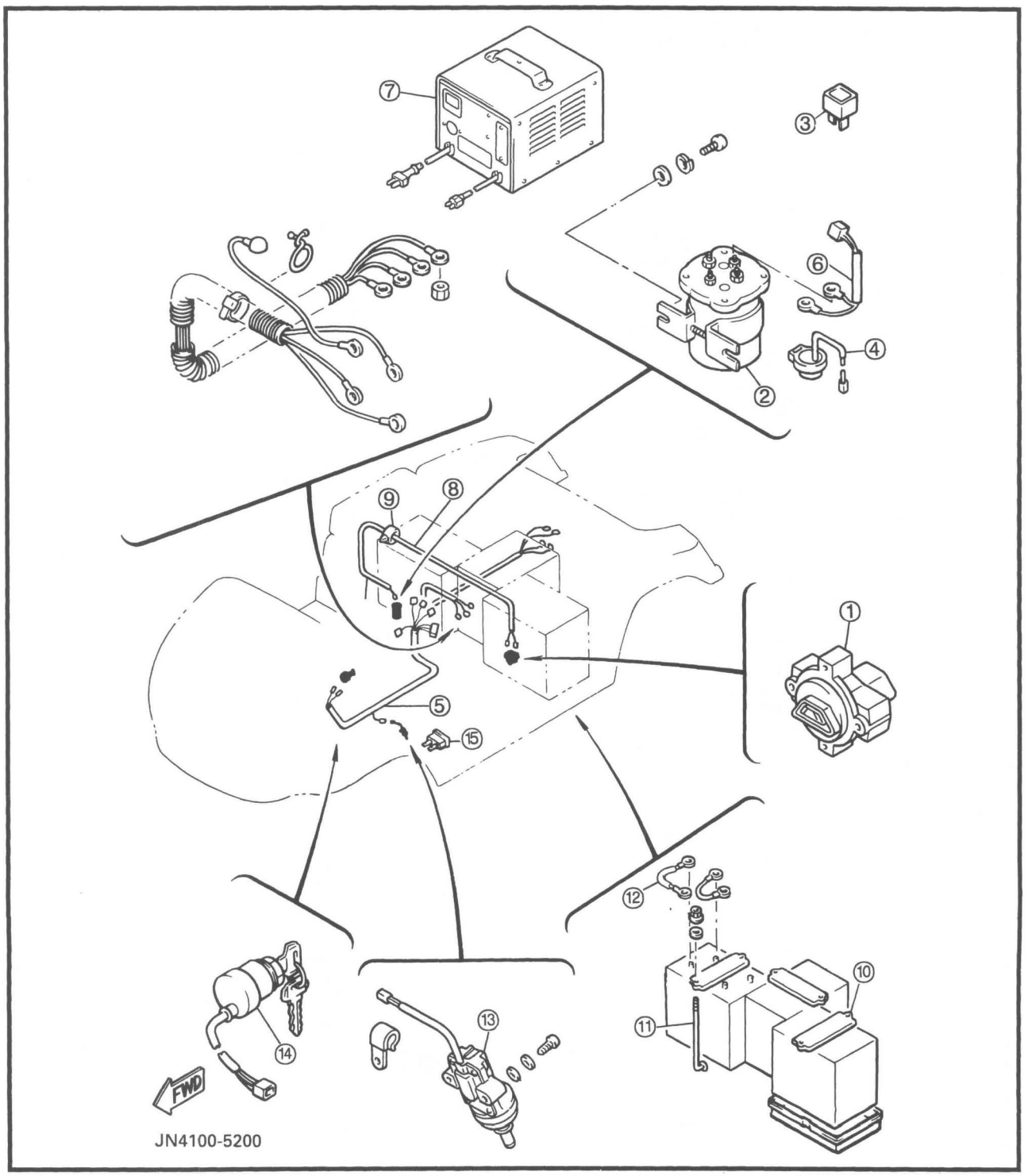

STARTING AND RECHARGING SYSTEM

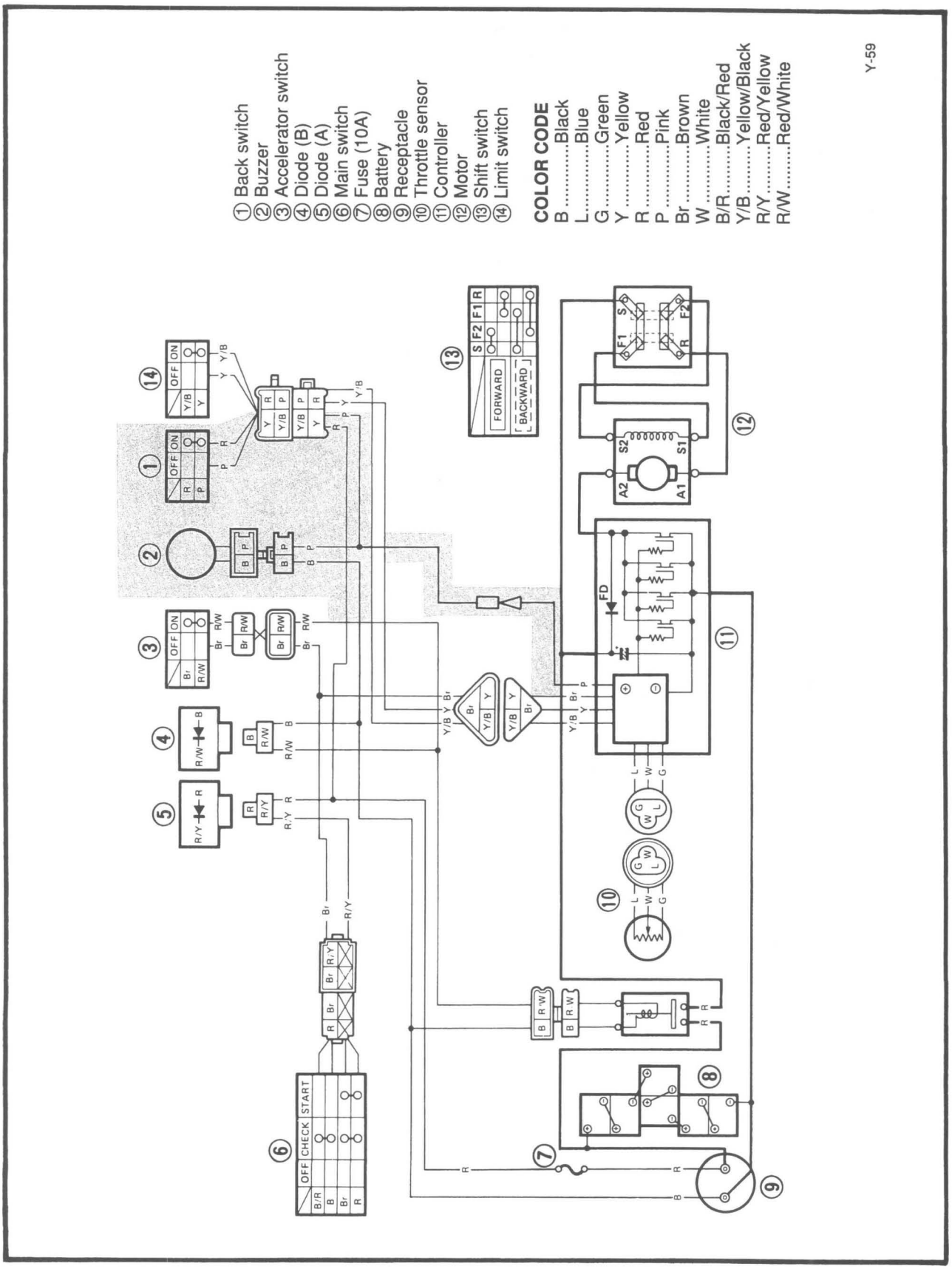

STARTING AND RECHARGING SYSTEM COMPONENTS

① Main switch
② Accelerator stop switch
⑤ Forward-reverse switch
⑥ Traction motor
⑦ Cut-off switch
⑧ Speed controller
⑨ Throttle sensor
⑩ Charging receptacle
⑪ Fuse
⑫ Diodes
⑬ Solenoid relay
⑭ Batteries (6V x 6)

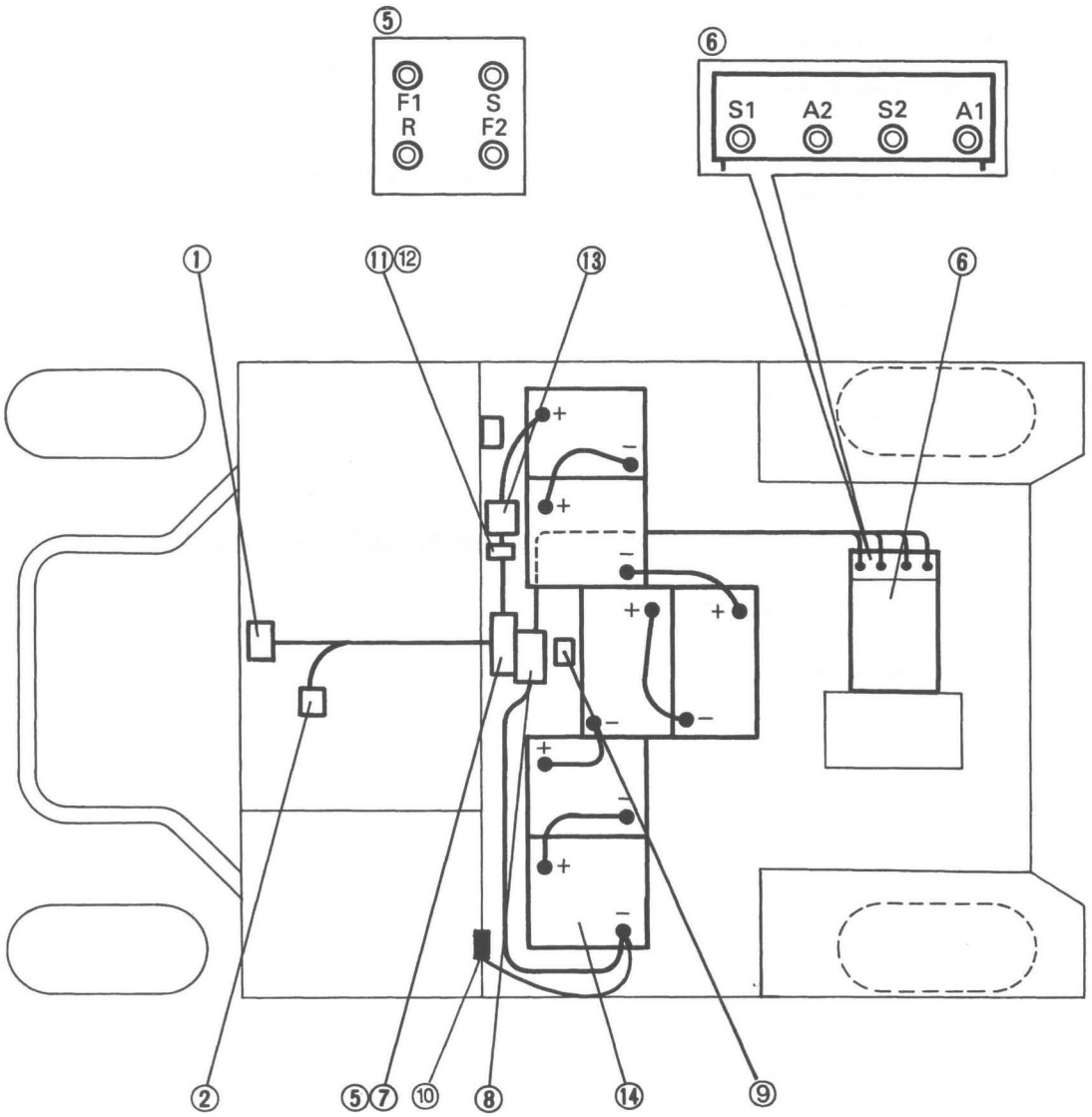

TROUBLESHOOTING

- The motor does not turn
- Bad acceleration
- Low speed
- Poor low speed
- Poor power
- Jerky running
- Abrupt starting

NOTE:

- Remove the following parts before troubleshooting.
  1) Seat
  2) Service lid
  3) Access panel
  4) Drink holder insert
- Use the following special tools in this troubleshooting.

Pocket Tester:
YU-3112-C, 90890-03112

Hydrometer:
YU-03036, 90890-03036

1. Battery

- Check the battery condition.

Specific Gravity:
1.260 at 20°C (68°F)

Voltage:
6V (x 6)

INCORRECT →

- Refill battery fluid.
- Clean battery terminals.
- Recharge or replace battery.

↓ CORRECT

2. Fuse

- Remove the fuse.
- Connect the Pocket Tester (Ω x 1) to the fuse.
- Check the fuse for continuity.

NO CONTINUITY →

Replace fuse.

↓ CONTINUITY

*

*

3. Diode check

- Remove the diode A (Red/Yellow, Red) and the diode B (Red/White, Black).
- Connect the Pocket Tester(Ω x 1) to two posts.
- Check each diode.

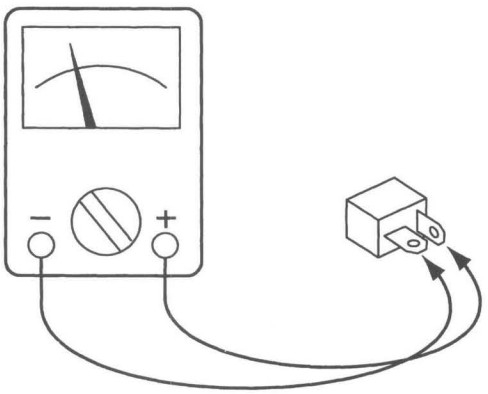

Y-117

Pocket tester connecting point		Good condition
(+) Red	(–) Black	
①	②	○
②	①	X

○: Continuity X: No continuity

BAD CONDITION

Replace diode.

GOOD CONDITION

4. Main switch

- Disconnect the main switch coupler from the wireharness.
- Connect the Pocket Tester (Ω x 1) to the main switch coupler (Red, Brown).

Tester (+) Lead → Red terminal ①
Tester (–) Lead → Brown terminal ②

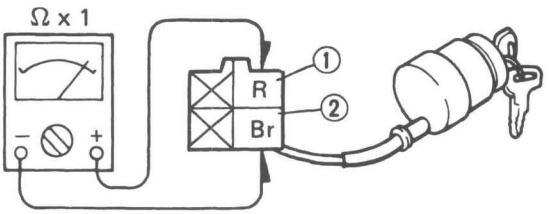

- Turn the main switch to "ON" then to "OFF".
- Check the main switch for continuity.

Switch position	Good condition	Bad condition		
ON	○	X	X	○
OFF	X	X	○	○

○: Continuity X: No continuity

BAD CONDITION → Replace main switch.

GOOD CONDITION ⇩

5. Accelerator stop switch

- Disconnect the accelerator switch leads.
- Connect the Pocket Tester (Ω x 1) to the accelerator switch leads (Brown, Red/White).

Tester (+) Lead → Brown Lead
Tester (–) Lead → Red/White Lead

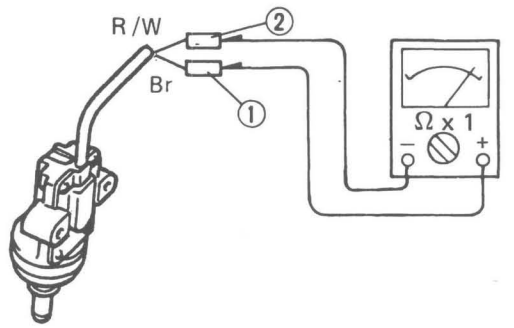

- Push the accelerator pedal.
- Check the accelerator switch for continuity.

Accelerator Pedal position	Good condition	Bad condition		
Push	○	X	X	○
Free	X	X	○	○

○: Continuity X: No continuity

BAD CONDITION → Replace accelerator stop switch.

GOOD CONDITION ⇩

*

*

6. Solenoid relay

- Connect the Pocket Tester (Ω x 1) to the solenoid relay terminals.
- Disconnect the solenoid relay coupler.
- Connect the battery positive terminal ① and solenoid relay terminal (Red/White) ② using the jumper lead ③ *.
- Connect the battery negative terminal ④ and solenoid relay terminal (Black) ⑤ using the jumper lead ③ *.

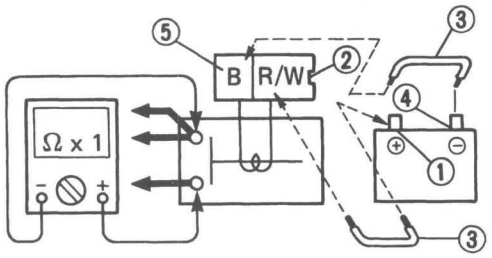

- Check the solenoid relay for continuity.

	Good condition	Bad condition		
Connect the battery	○	X	X	○
Disconnect the battery	X	X	○	○

○: Continuity X: No continuity

BAD CONDITION → Replace solenoid relay.

GOOD CONDITION

7. Shift switch

- Disconnect the cut-off switch lead.
- Connect the Pocket Tester (Ω x 1) to the cut-off switch leads (Yellow, Yellow).

Tester (+) Lead → Yellow/Black Lead
Tester (-) Lead → Yellow Lead

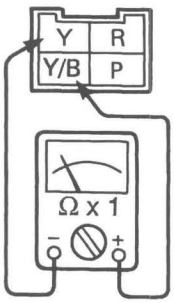

Y-403

- Turn the shift lever "FORWARD", neutral, and "REVERSE" position.
- Check the shift switch for continuity.

Lever position	Good Condition	Bad condition		
FORWARD OR REVERSE	○	X	X	○
Neutral	X	X	○	○

○: Continuity X: No continuity

BAD CONDITION → Replace shift switch.

GOOD CONDITION ↓

8. Throttle sensor

- Turn the main switch to "OFF".
- Remove the throttle sensor coupler.
- Connect the Pocket Tester (Ω x 1k) to the throttle sensor coupler.

Tester (+) Lead → Blue and White terminal
Tester (–) Lead → Green terminal

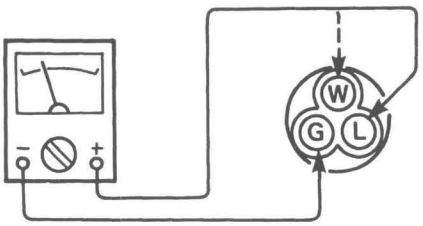

Throttle sensor resistance
Blue-Green: 1kΩ ± 20%
White-Green: 0Ω

- Slowly depress the accelerator pedal*.

Throttle sensor resistance
White-Green: 0 → 1kΩ ± 30%

INCORRECT → If the accelerator rod length is good, replace throttle sensor.

MEETS SPECIFICATION ↓ *

*

NOTE:
The ohmmeter needle should move smoothly from about 0Ω to about 1kΩ when accelerator pedal is depressed. Jumpy needle movement indicates a faulty TPS and will cause erratic running conditions.

*

9. Traction motor check

- Jack up the rear wheels and block the front wheels.
- Connect the battery positive terminal ① and traction motor terminal A1 ② using the jumper lead③*.
- Connect the battery negative terminal ④ and traction motor terminal A2 ⑤ using the jumper lead③*.
- Check the traction motor operation.

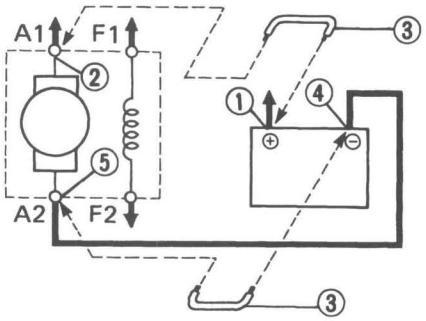

*

⚠WARNING

- **A wire to the jumper lead must have at least the equivalent capacity of the battery lead or the jumper lead may burn.**
- **This check is likely to produce sparks, so be sure that no flammable gas or fluids are in the vicinity.**
- **This test will make the motor run at full speed.**

FAULTY

Repair and/or replace traction motor.

OK

10. Controller check

- Before checking the controller, turn the main switch "OFF".
- Discharge the controller condenser for 30 seconds*.

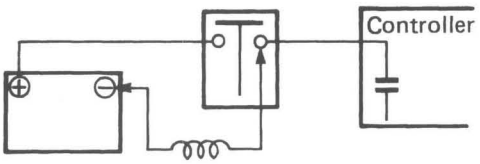

- Turn the main switch "ON".
- Turn the shift lever to "F"
- Check the solenoid relay for output voltage.

Tester (+) Lead → Solenoid relay output terminal
Tester (–) Lead → Ground

- Slightly push the accelerator pedal.

*

NOTE:
Use a jumper lead with 1kΩ resistance.

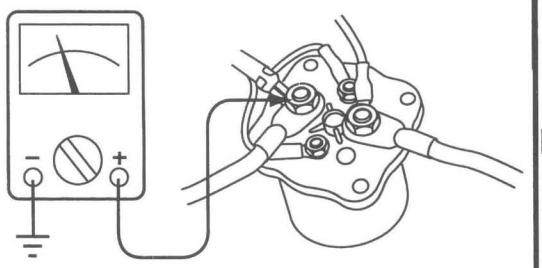

Solenoid relay output:
36V

- Check the traction motor for output voltage.

Tester (+) Lead → A2 terminal
Tester (–) Lead → Ground

- *Slightly* push the accelerator pedal.

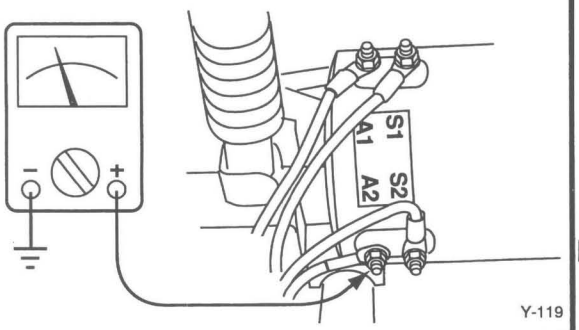

Traction motor output voltage:
36V

- Remove the controller coupler.
- Check the controller power source voltage.

Tester (+) Lead → Brown terminal
Tester (–) Lead → Ground

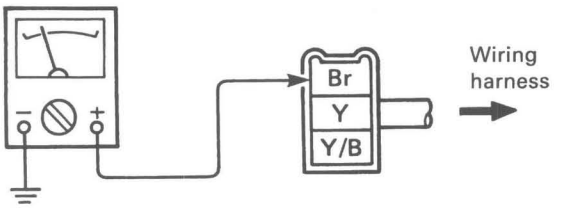

Controller input voltage:
36V

- Check the cut-off switch for resistance.

INCORRECT → Check solenoid relay again and wiring harness.

OUT OF SPECIFICATION → Check shift switch, traction motor and wiring harness again.

OUT OF SPECIFICATION → Check wiring harness.

Tester (+) Lead → Yellow terminal
Tester (–) Lead → Yellow/Black terminal

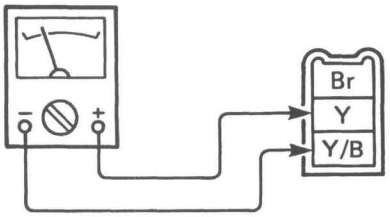

OUT OF SPECIFICATION

Replace cut-off switch.

Cut-off switch resistance:
Shift lever F•R position: 0Ω
Shift lever neutral position: ∞Ω

NOTE:
Before checking the controller output voltage, connect the controller coupler.

- Check the controller for output voltage.
- Remove the throttle sensor coupler from controller.

Tester (+) Lead → Blue terminal
Tester (–) Lead → Green terminal

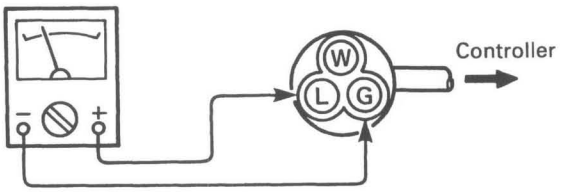

Output voltage:
Blue-Green : 5V

- Connect the throttle sensor coupler.
- Depress the accelerator pedal.

If traction motor moves, OK.

OUT OF SPECIFICATION

Replace controller.

OK

11. Wiring connection

- Check the wiring harness for damage.
  Refer to "STARTING AND RECHARGING SYSTEM WIRING DIAGRAM" on page 7-45.

BAD CONDITION

Replace wiring harness.

TRACTION MOTOR

① Front bracket
② Armature assembly
③ Stator assembly
④ Brush set
⑤ Brush holder
⑥ Brush holder screw
⑦ Bracket
⑧ Grommet

SPECIFICATIONS	
Model	58C58JB56184
Voltage	36V DC
Rated output KW/HP	1.9 KW 2.5 HP (30 min.)
Performance Current Voltage Torque Revolution	 62A 36V 8.7 Nm (0.87 m • kg, 6.3 ft • lb) 3,300 r/min
Weight	16.5 kg (36.4 lb)

A	BRUSH LENGTH: Limit: 14.5mm (0.57 in) Standard: 34.3 mm (1.35 in)
B	BRUSH SPRING FORCE: New brush: 720 ~ 1,080 g (24.3 ~ 39.2 oz) Worn brush: 450 g (15.2 oz)
C	COMMUTATOR DIAMETER: Wear limit: 66.55 mm (2.62 in)

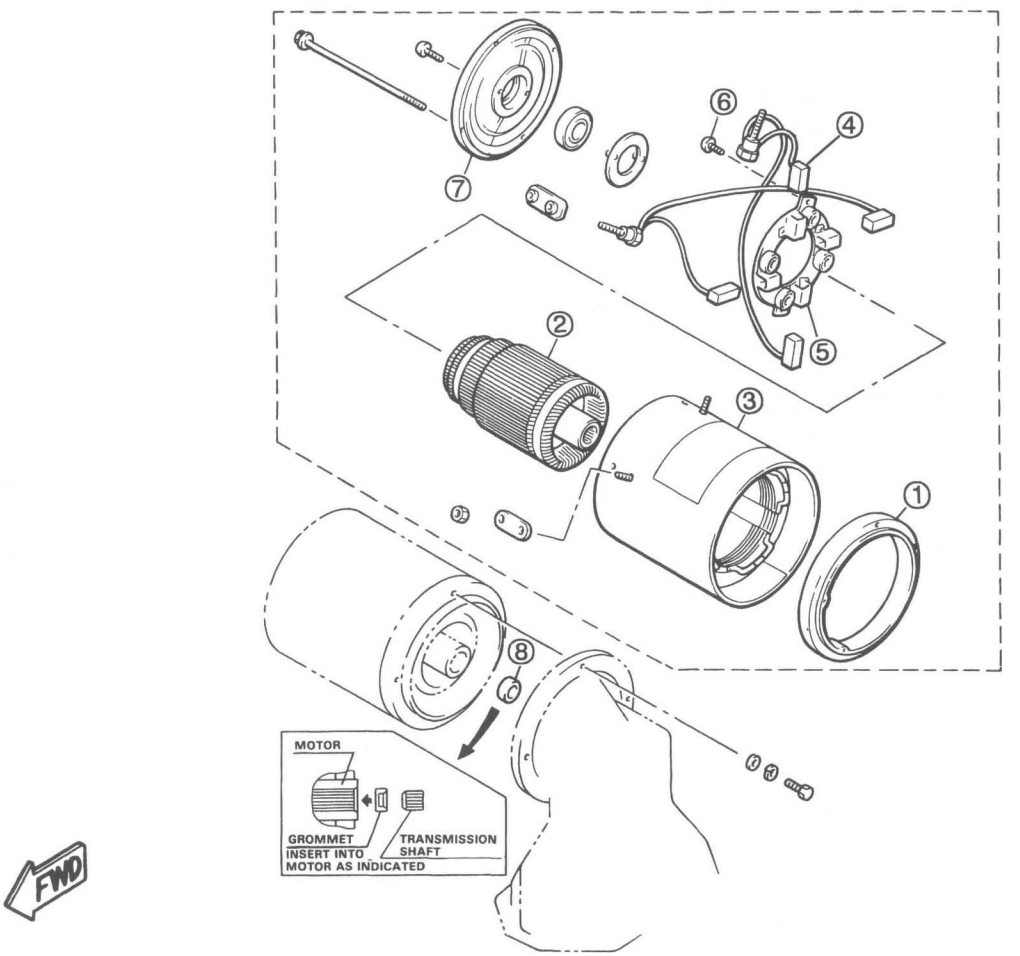

Removal

1. Remove:
   - Access panel
   - Seat
2. Disconnect
   - Negative cable to motor controller.
   - Negative lead to battery pack.

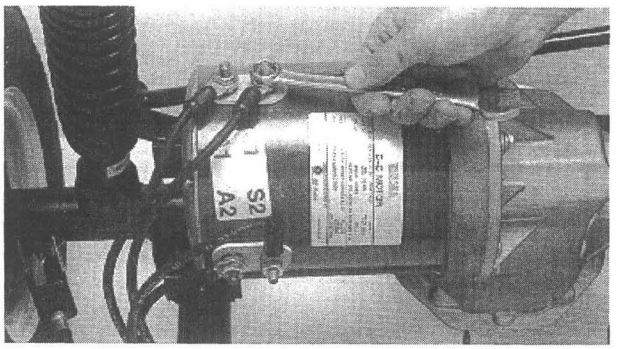

Y-404

3. Disconnect:
   - All four leads from the motor terminals.

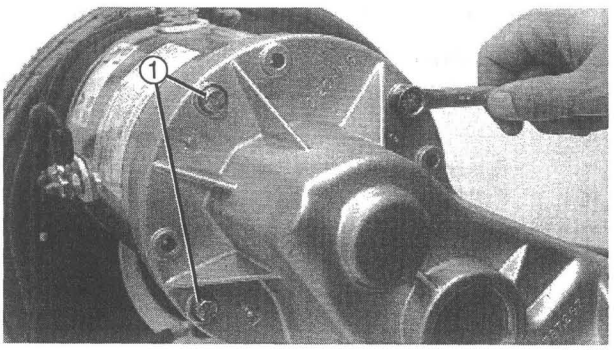

Y-405

4. Remove:
   - Motor securing bolts ①

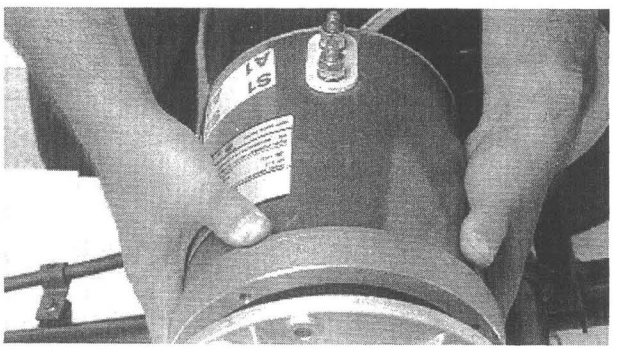

Y-406

5. Remove:
   - Traction motor

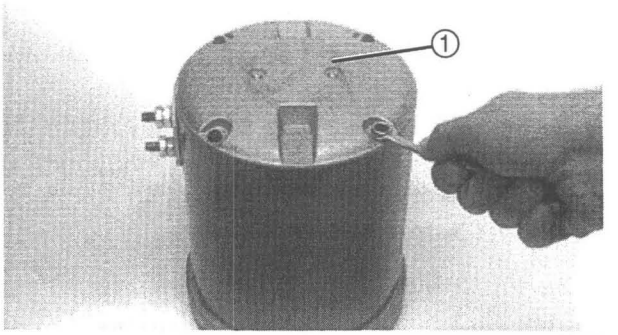

Y-407

6. Remove:
   - Bolts
   - Bracket ①

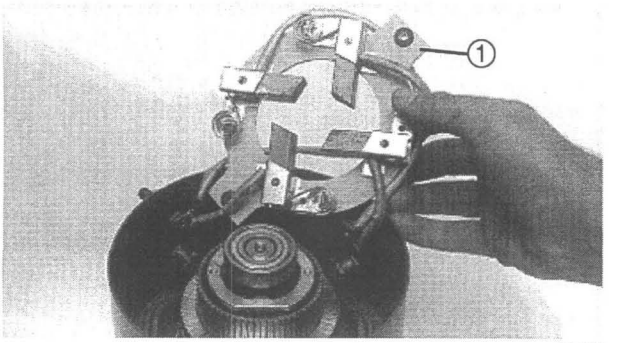

Y-408

7. Remove:
   - Bolts
   - Brush holder ①

NOTE:
Leave brush leads attached to yoke while checking brush length.

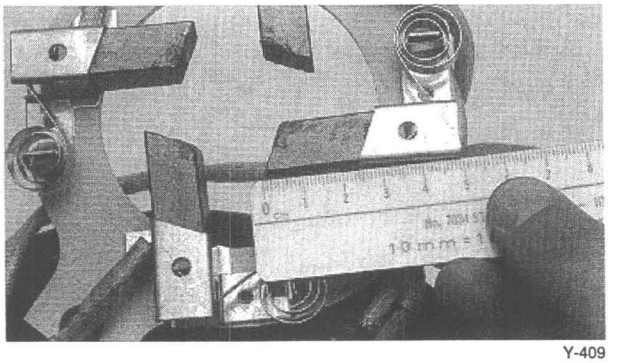

Y-409

8. Check:
   - Brush length
     Out of specification → Replace.

	Minimum Brush Length: **14.5 mm (0.57 in)**

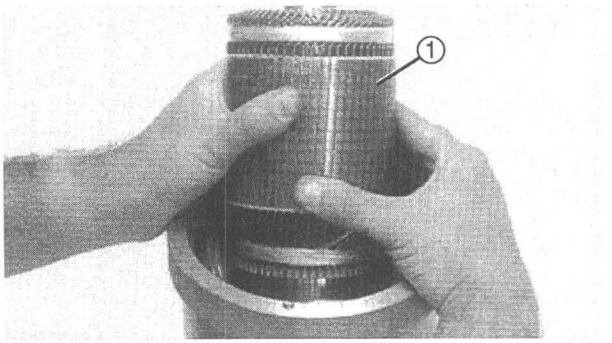

Y-410

9. Remove:
   - Armature ①

Inspection

1. Clean the interior of the yoke and bracket with compressed air.
2. Inspect:
   - Outer surface
     Cracks/Damage → Replace.

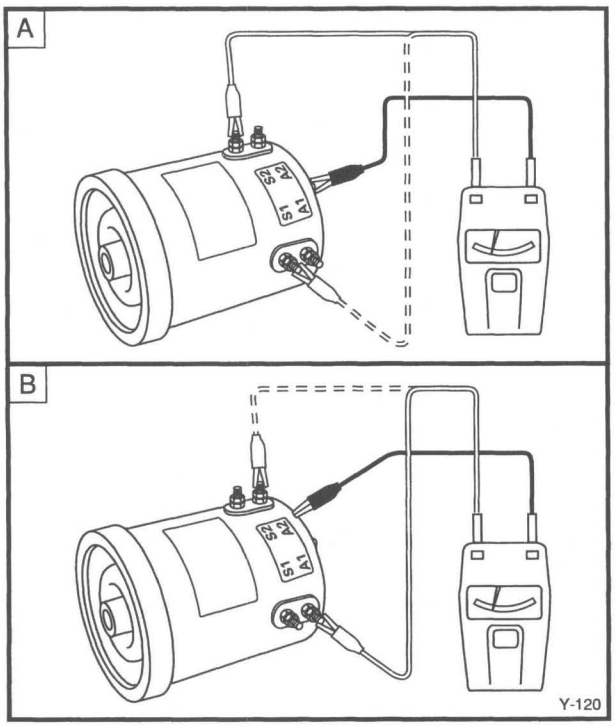

3. Measure:
   - Insulation resistance (Yoke [A] and bracket [B])
     Use a 500 volt insulating resistance tester.
     Defective → Replace.

	Insulation Resistance: **More than 1MΩ at 20° C (68° F)**

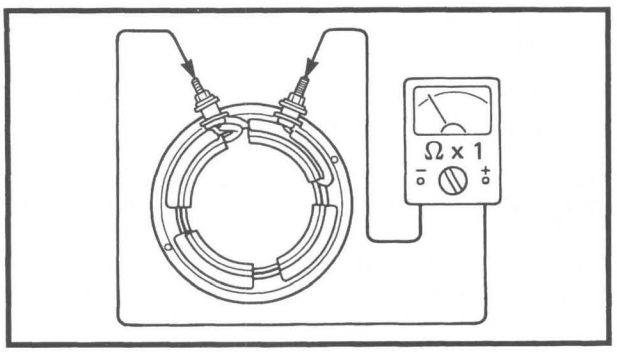

4. Measure:
   - Field coil resistance
     Use the Low Reading Ohmmeter.
     Out of specification → Replace.

	Field Coil Resistance: **0.005 ~ 0.0064 Ω at 20° C (68° F)**

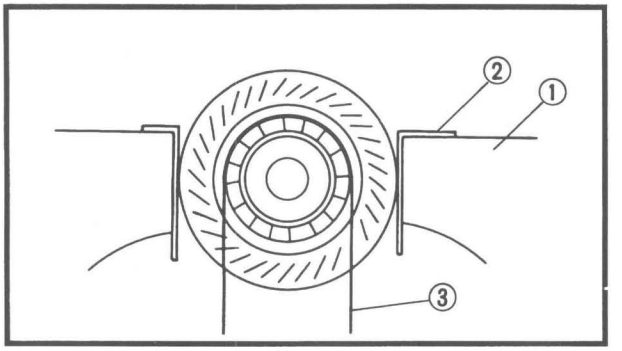

5. Inspect:
   - Commutator (Outer surface)
     Hold the armature in a vise ① and copper or aluminium plate ② .
     Dirty → Clean with #600 grit emery cloth ③ .

CAUTION

Hold armature lightly between padded vise jaws to avoid damaging armature.

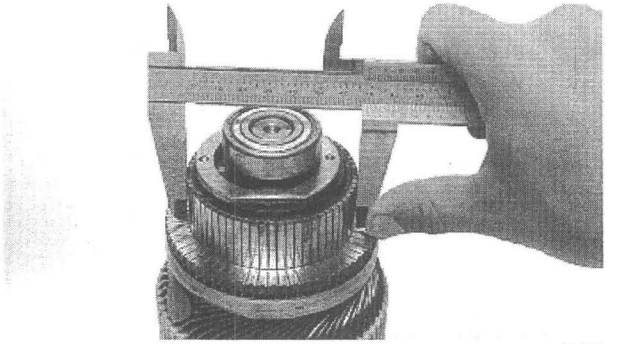

6. Measure:
   - Commutator (Diameter)
     Out of specification → Replace.
     Measure the diameter of the commutator as shown.
     Out of specification → Replace.

Wear Limit (Mimimum Diameter):
66.55 mm (2.62 in)

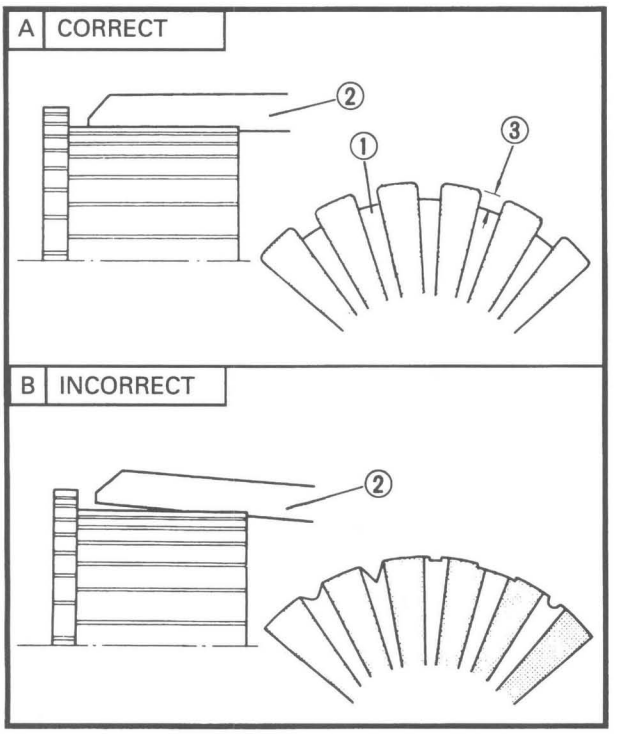

7. Measure:
   - Mica ① (Insulation depth)
     (between commutator segments)
     Out of specification → Scrape mica to proper limits.
     Use a hacksaw blade ② that is ground to fit.

Mica Undercut ③ :
Limit: 0.25 mm (0.0098 in)

NOTE:
- The mica insulation of the commutator must be undercut to ensure proper operation of the commutator.
- Carefully clean between the segments after the above steps.

8. Measure:
   - Armature coil resistance
     Use the Low Reading Ohmmeter.
     Out of specification → Replace.

Armature Coil Resistance:
0.0228 ~ 0.0232 Ω at 20° C (68° F)

Low Reading Ohmmeter:
YU-91026, 90890-03064

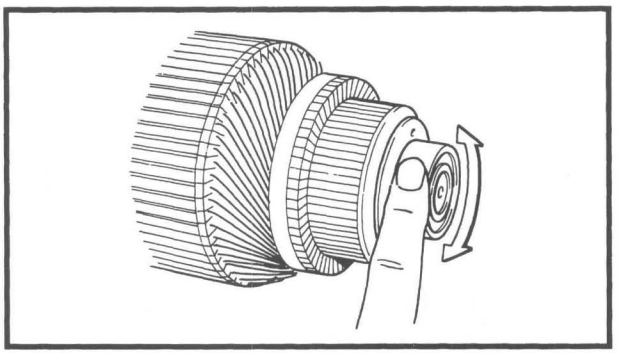

9. Check:
   - Bearing movement
     Rotate with fingers.
     Roughness/Wear → Replace.

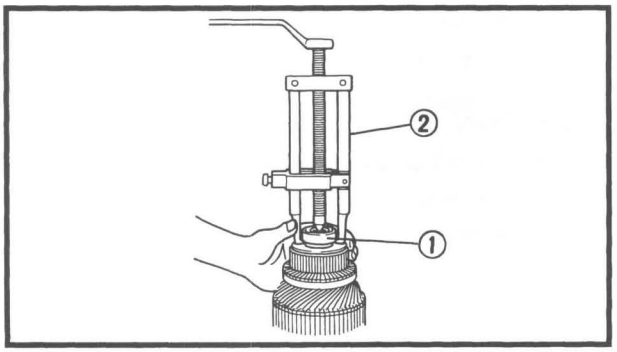

Bearing replacement steps:
- Remove the bearing ① with a bearing puller ②.
- Install the new bearing.

CAUTION

Do not strike the outer race ③ or balls of the bearing. Contact should be made only with the center race ④ .

[C] PRESS

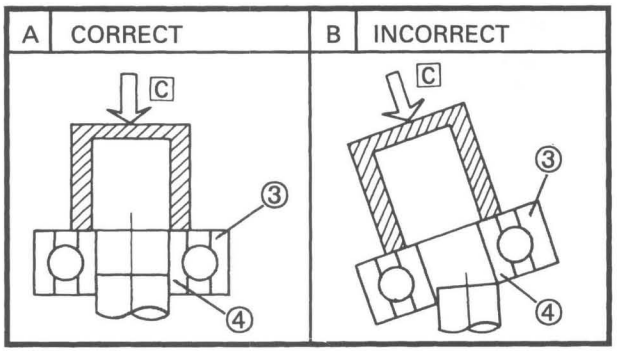

10. Install:
    - Armature coil
      into the brush holder.
11. Measure:
    - Brush spring force
      Use a spring scale ①.
      Pull the scale and check reading as the brush spring just comes off the brush.
      Out of specification → Replace

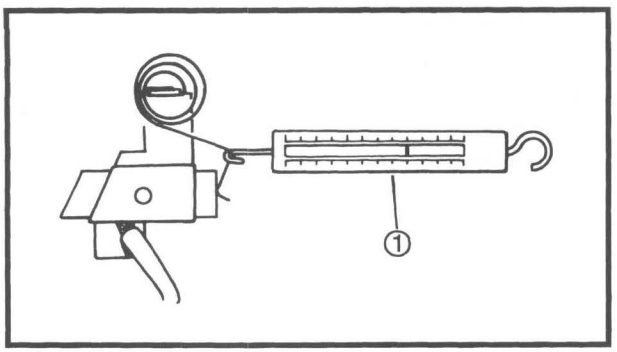

Brush Spring Force:

New brush:	**720 ~ 1,080 g (24.3 ~ 36.5 oz)**
Limit:	**450 g (15.2 oz)**

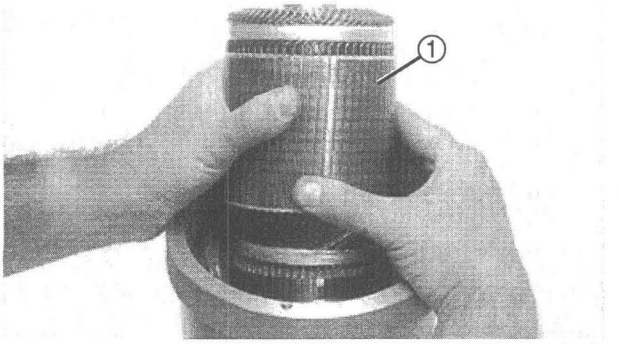

Y-410

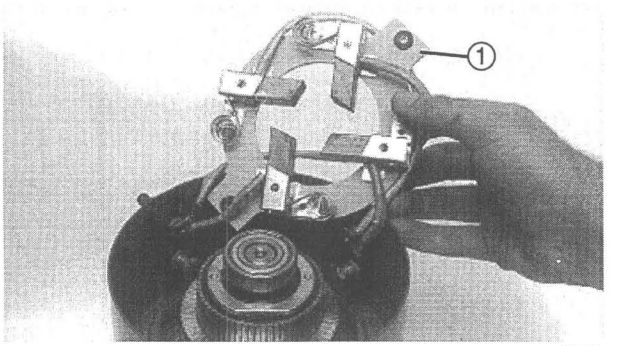

Y-408

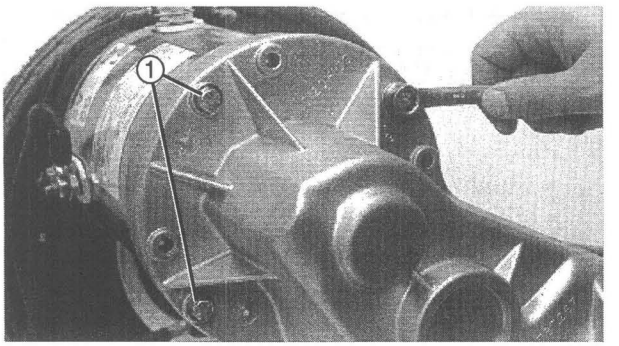

Y-405

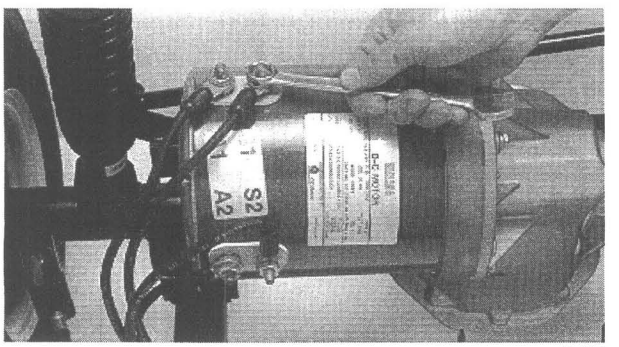

Y-404

Assembly

Reverse the "Disassembly" procedure.
Note the following points.

1. Install armature ① into yoke while spreading apart brushes.

CAUTION

When installing armature into yoke, use care not to damage brushes.

2. Install:
   - Bracket ①
   - Bolts

Installation

Reverse the "Removal" procedure.
Note the following points.

	Motor Securing Bolt ① : (Upper) **6 Nm (0.6 m • kg, 4.3 ft • lb)**

1. Connect:
   - Motor terminal leads
2. Connect:
   - Negative cable to motor controller
   - Negative lead to battery pack
3. Install:
   - Seat
   - Access panel

MOTOR CONTROLLER

① Motor control unit
② Throttle sensor
③ Throttle bracket
④ Return spring
⑤ Circlip
⑥ Pedal crank pin
⑦ Cover
⑧ Joint rod

[A] To Battery (Negative)
[B] To Traction motor A2
[C] To Buzzer
[D] To Solenoid relay
[E] To Wireharness
[F] To Throttle sensor

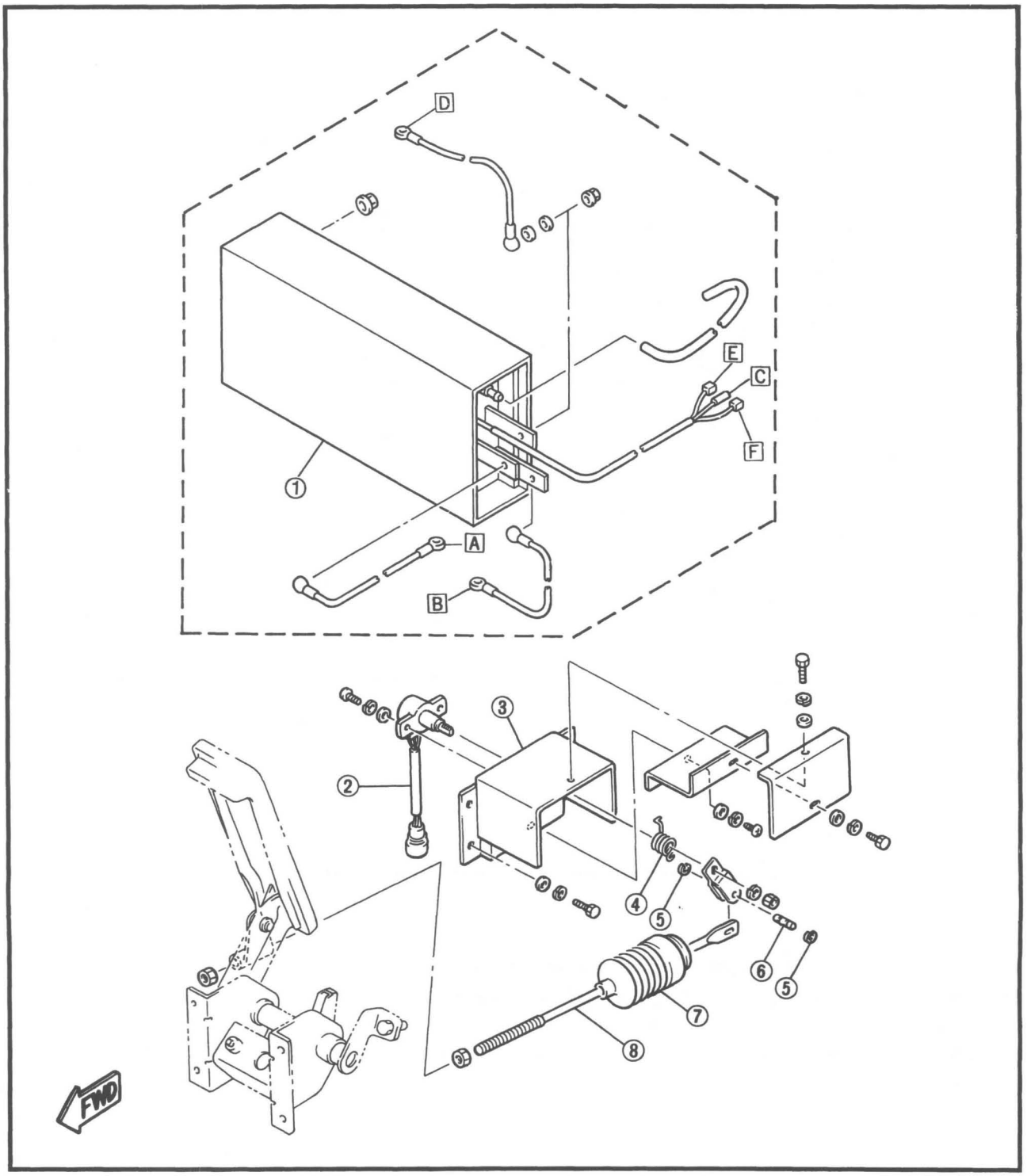

CONTROLLER SYSTEM

① PWM (Pulse Width Modulation) control circuit
② Throttle sensor
③ Slow-start circuit
④ Electric current control circuit (Current limiter)
⑤ Safeguard circuit
⑥ FET driving circuit
⑦ Traction motor
⑧ FET (Field Effect Transistor)
⑨ Solenoid relay
⑩ Battery
⑪ Controller unit.

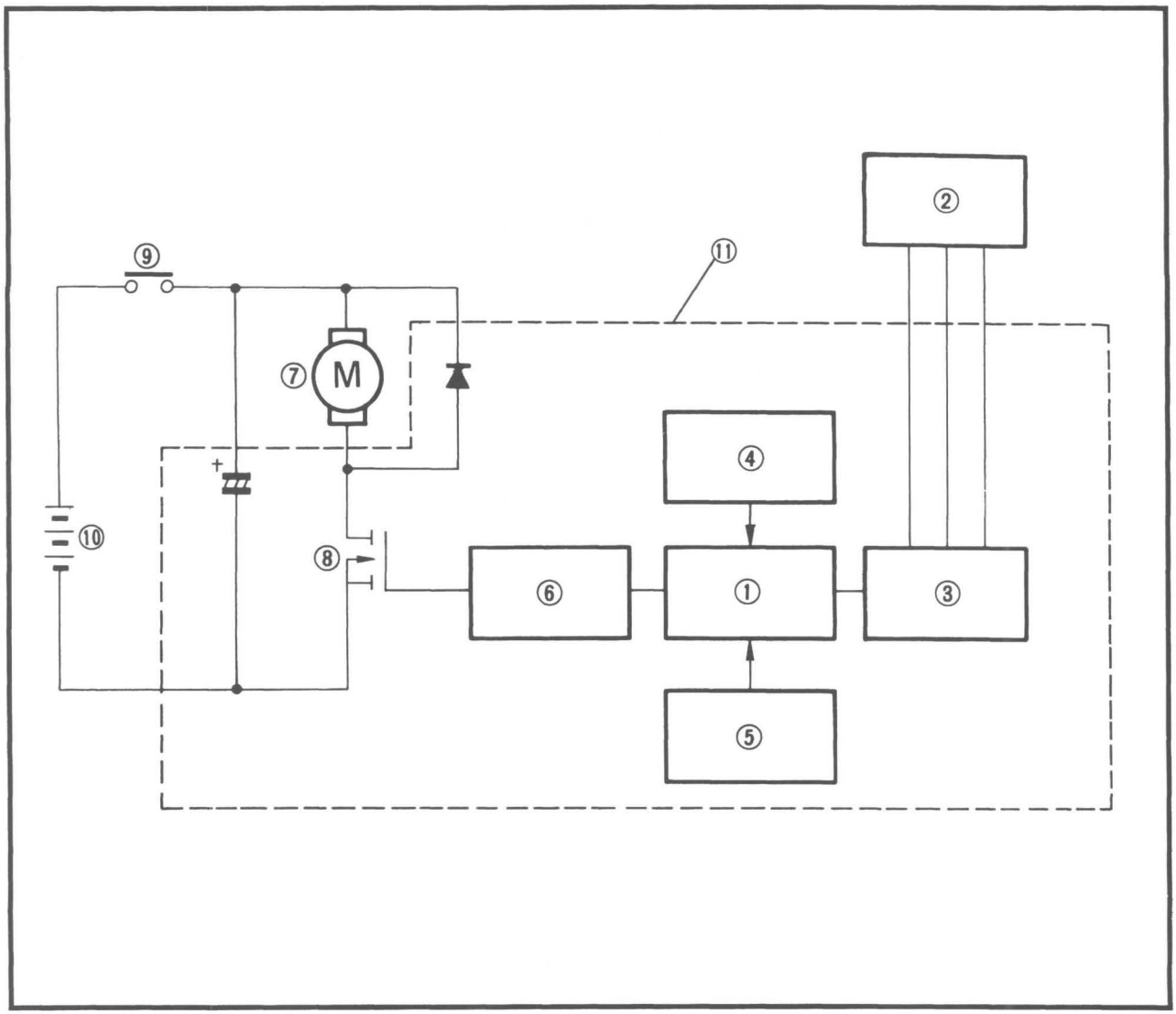

FEATURES

- Maintenance free due to solid state, sealed construction
- Soft starting and smooth operating (infinitely variable speeds)
- Current limiter to prevent motor burning
- Solenoid relay protection circuit to prevent relay chattering damage when climbing by an excessive discharge of the battery.

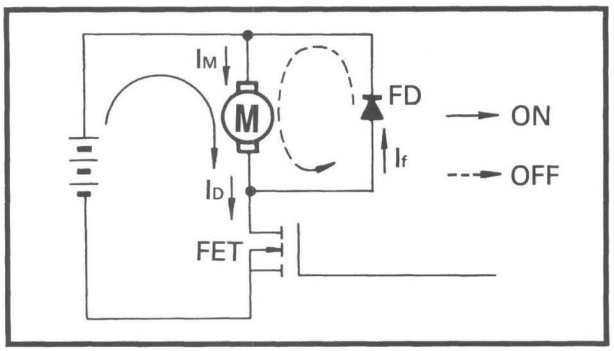

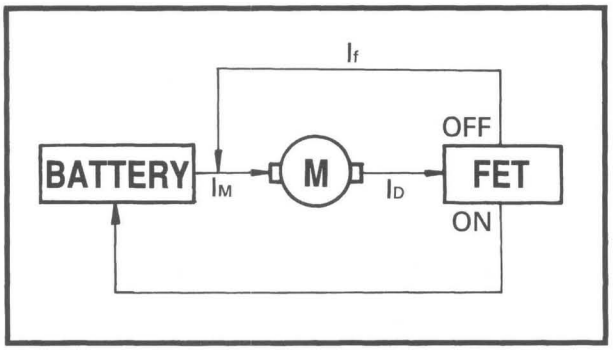

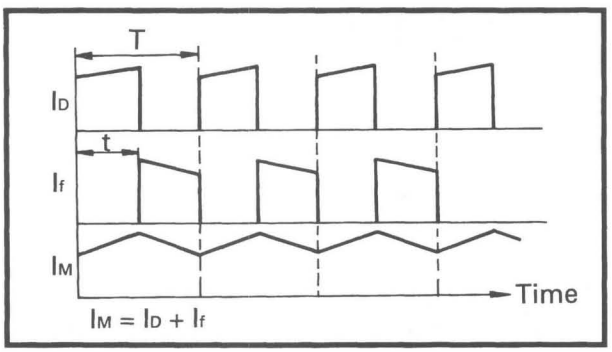

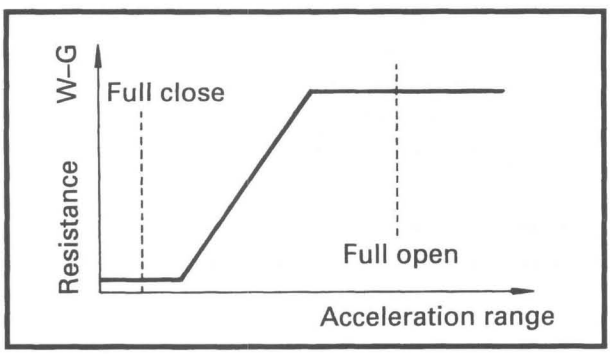

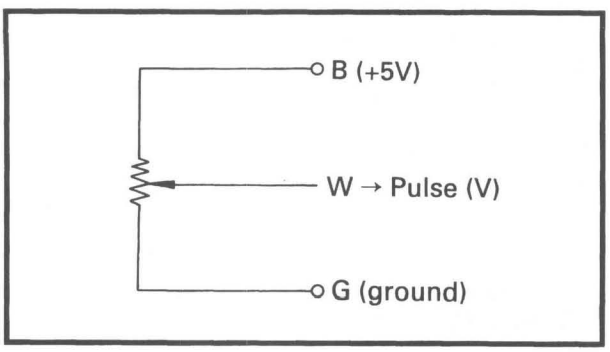

FUNCTION

1. PWM control circuit

In the partial open range, the FET controls the motor speed with fast repeating "ON" and "OFF" switching.

In this case, while the FET is "ON" (time t), the current ID is on to traction motor; while FET is in "OFF" (time T-t), the current IF is on to traction motor through FD (Field Diode).

Consequently, in the partial open range, the battery current ID will be reduced, because the motor current IM is compounded with ID and If.

2. Throttle sensor

The throttle sensor transfers a pulse (determined by the movement of the accelerator pedal) to the controller.

G ..... Green
W ..... White
B ..... Blue

3. Principle of PWM driving circuit

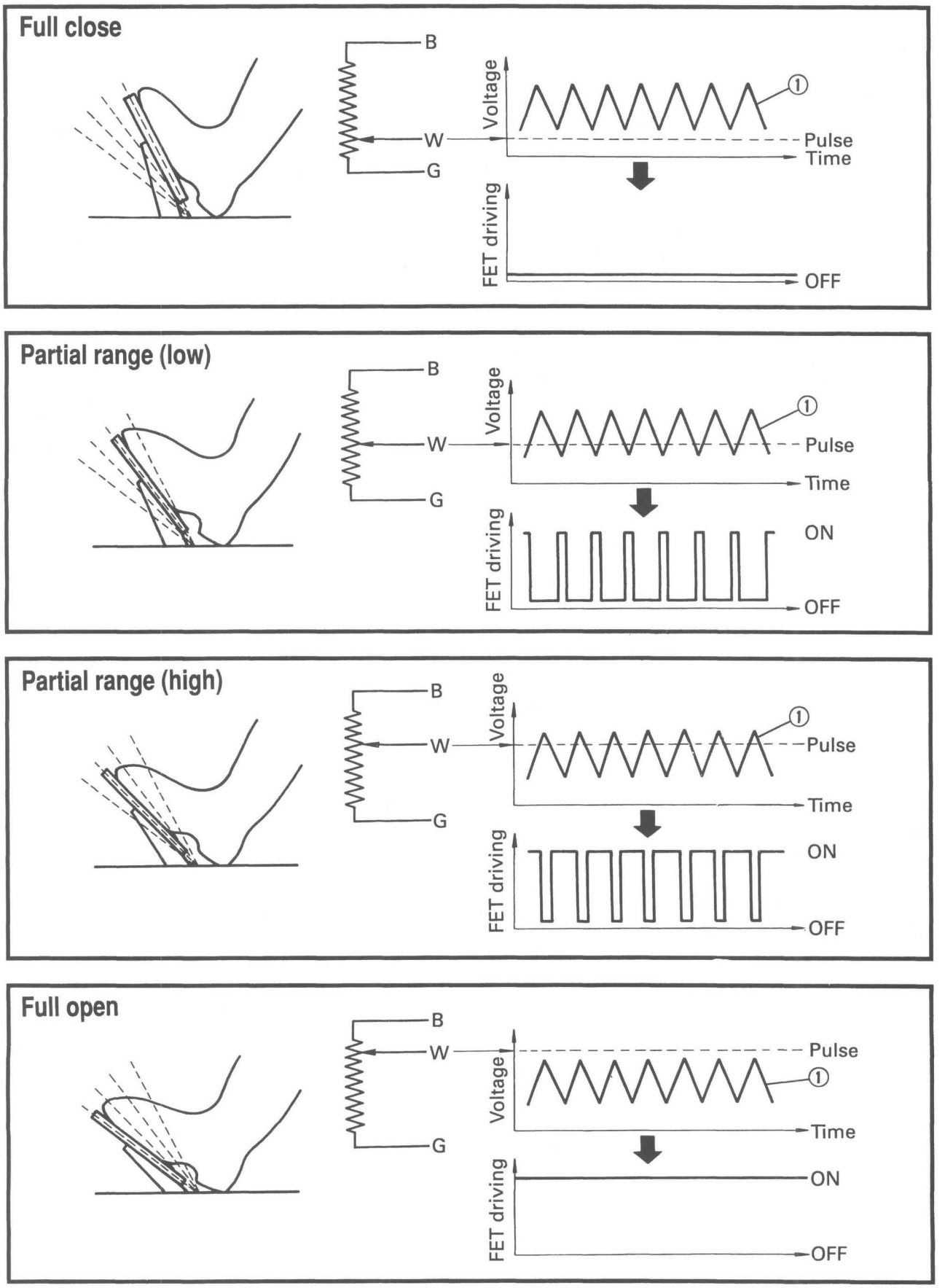

① PWM IC Chopping Wave

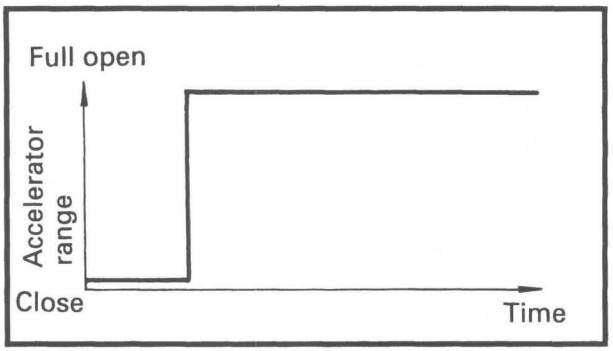

4. Slow-start circuit

When the accelerator pedal is depressed briskly, the slow-start circuit prevents the car from starting too quickly.

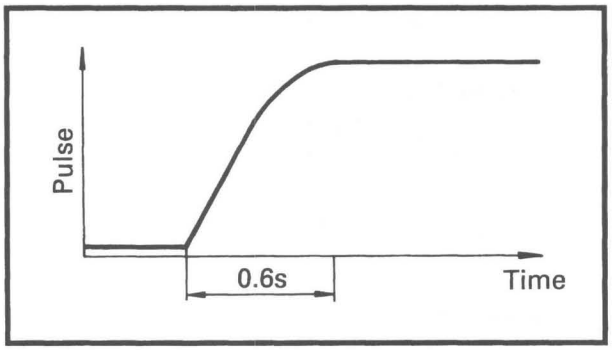

In this case, the slow-start circuit delays the accelerator pulse by 0.6s.

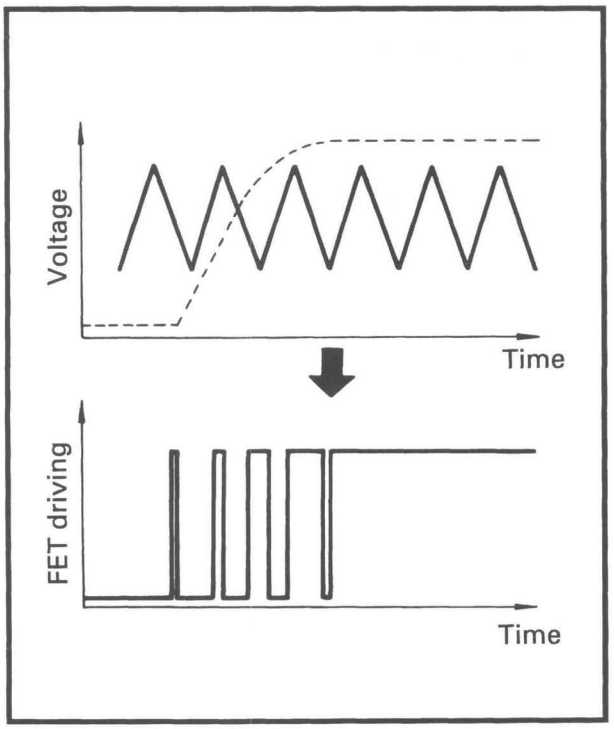

5. Electric current control circuit (Current limiter)

The current limiter keeps the traction motor and controller from burning out due to a too large current when the traction motor locks.

6. Safegaurd circuit

1) Spark Contact Protection (Cut-off switch)
   - The current is on after the solenoid relay is on.
   - FET is forced off when the shift lever is moved from forward or reverse position.

2) Low-Voltage protection
   - FET is turned off by force if the battery voltage becomes 10V to prevent relay chattering damage by an excessive discharge of the battery.

3) Thermal protector
   - The FET is forced OFF, when the FET temperature reaches 100°C.
   - When the thermal protector cuts in, stop and let it cool for a while, then start again.

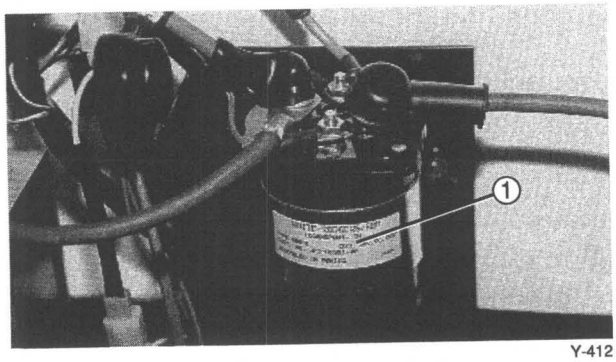

Y-412

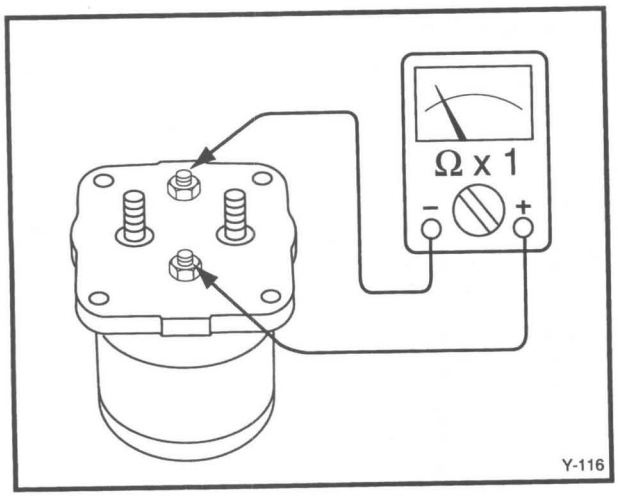

Y-116

SOLENOID RELAY

1. Remove:
   - Seat
2. Turn the main switch to "ON".
3. Check:
   - Solenoid relay (clicking sound)
     Press accelerator pedal to close the accelerator stop switch.
     If clicking → Check for continuity between the two contact posts with Pocket Tester while the solenoid is activated. If there is no continuity, replace the relay.
     If not clicking → Measure coil resistance in solenoid.
4. Check:
   - Solenoid relay (no clicking sound)
     Disconnect solenoid leads.
     Measure coil resistance use the Pocket Tester.
     Out of specification → Replace.

Pocket Tester:
YU-3112-C, 90890-03112

Solenoid Coil Resistance:
56.2 ~ 68.6Ω at 20° C (68° F)

Installation

1. Install:
   - Solenoid relay
2. Connect:
   - Leads

Nut (Terminal):
6 Nm (0.6 m • kg, 4.3 ft • lb)

SIGNAL SYSTEM

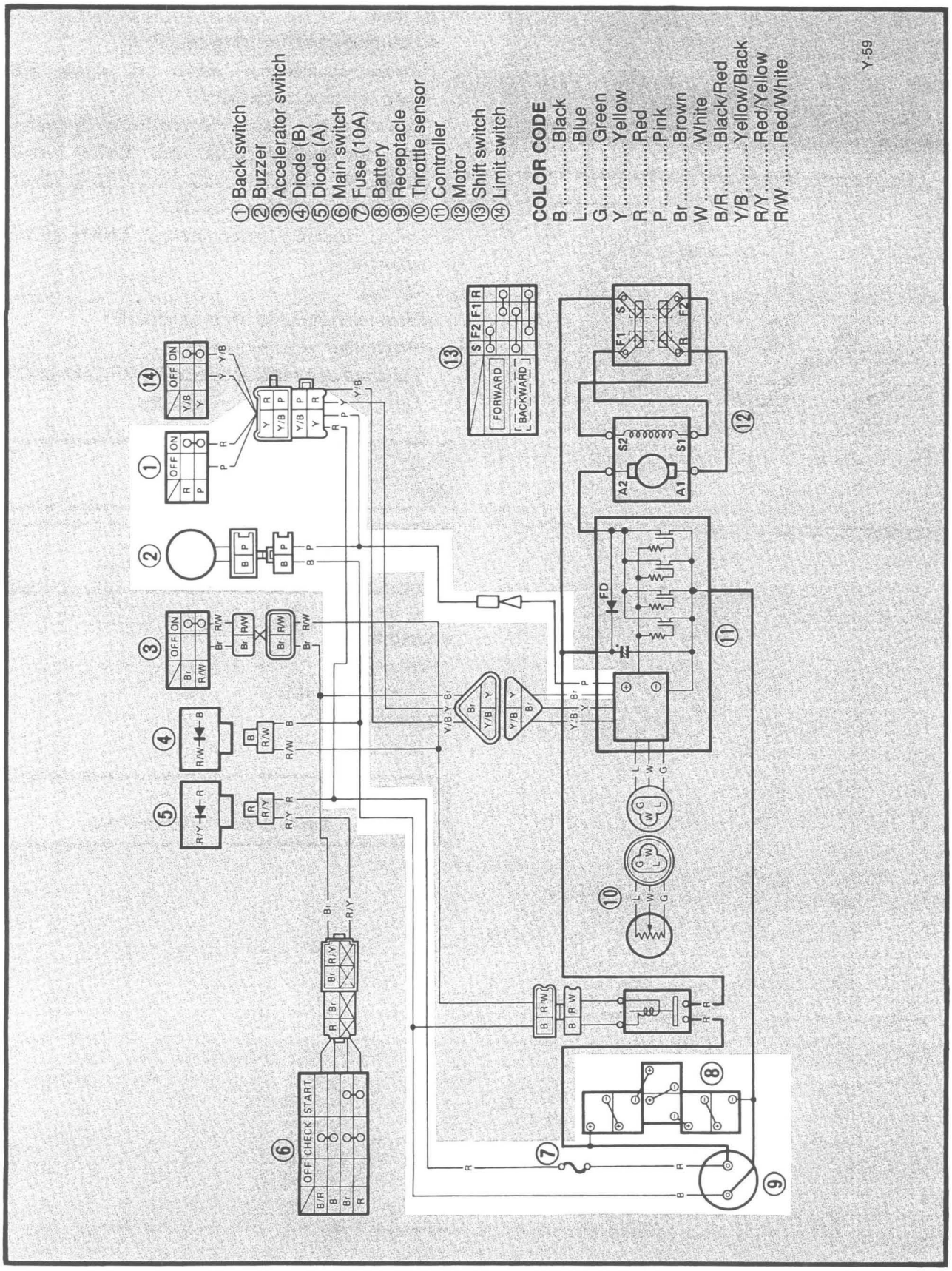

SIGNAL SYSTEM COMPONENTS

① Main switch
③ Buzzer switch
④ Back-up buzzer
⑪ Fuse
⑭ Batteries (6V x 6)

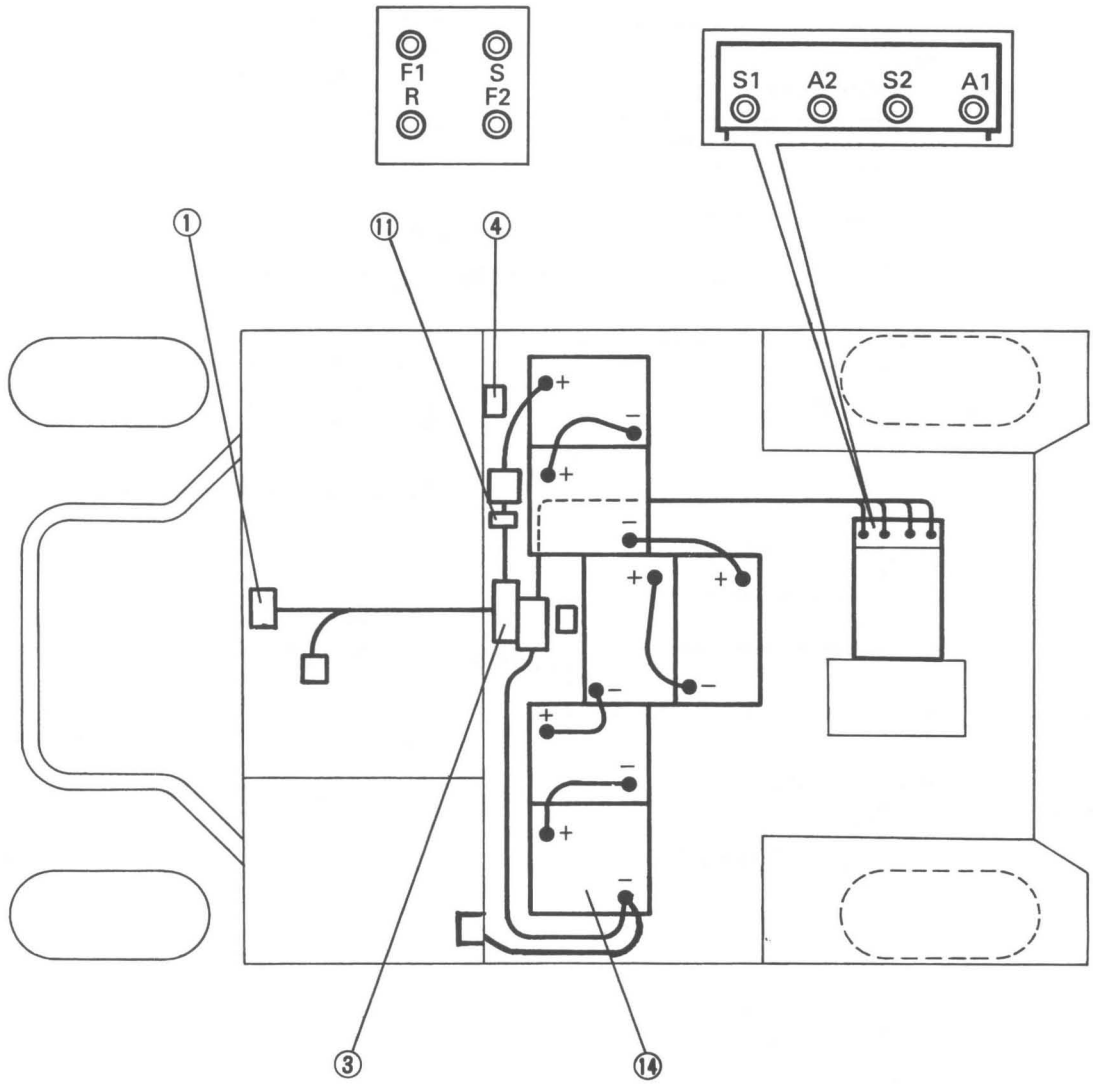

TROUBLESHOOTING

THE BACK-UP BUZZER DOES NOT OPERATE

Procedure

Check:

1. Battery
2. Fuse
3. Buzzer switch
4. Back-up buzzer
5. Wiring connection

NOTE:

- Remove the following parts before troubleshooting.
  1) Seat
- Use the following special tools in this troubleshooting.

Pocket Tester: **YU-3112-C, 90890-03112**	**Hydrometer:** **YU-03036, 90890-03036**

1. Battery

- Check the battery condition.
  Refer to CHAPTER 2 "BATTERY INSPECTION" section.

Specific Gravity:
1.260 at 20°C (68°F)
Voltage:
6V (x 6)

INCORRECT →

- Refill battery fluid.
- Clean battery terminals.
- Recharge or replace battery.

↓ CORRECT

2. Fuse

- Remove the fuse.
- Connect the Pocket Tester (Ω x 1) to the fuse.
- Check the fuse for continuity.

NO CONTINUITY →

Replace fuse.

↓ CONTINUITY

*

*

3. Buzzer switch

- Disconnect the buzzer switch leads.
- Connect the Pocket Tester (Ω x 1) to the buzzer switch leads (Red, Pink).

Tester (+) Lead → Red Lead
Tester (–) Lead → Pink Lead

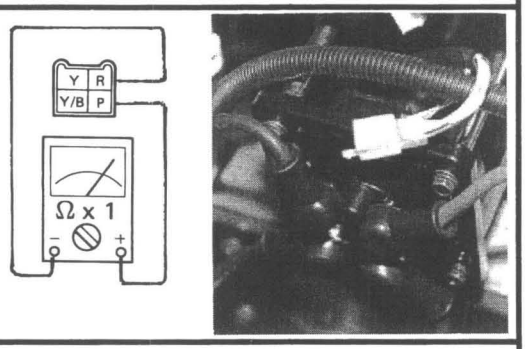

Y-403

- Turn the shift lever "FORWARD" and "REVERSE" position.
- Check the buzzer switch for continuity.

Lever Position	Good condition	Bad condition		
FORWARD	×	×	○	○
REVERSE	○	×	×	○

○: Continuity ×: No continuity

BAD CONDITION → Replace buzzer switch.

GOOD CONDITION

4. Back-up buzzer

- Disconnect the back-up buzzer leads.
- Connect jumper leads to the back-up buzzer leads (Black, Pink) and battery (36V).

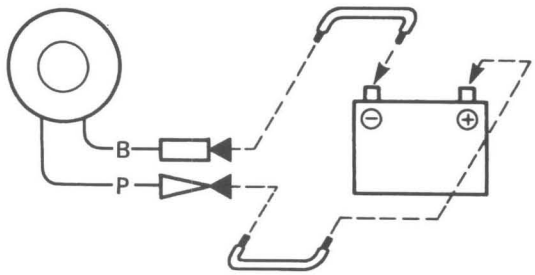

- Confirm the back-up buzzer sounds.

FAULTY → Replace back-up buzzer.

OK

*

*

5. Wiring connection
• Check the entire signal system for connection. Refer to "SIGNAL SYSTEM WIRING DIAGRAM" on page 7-69.

CHAPTER 8
TROUBLESHOOTING

TROUBLESHOOTING

TROUBLESHOOTING FOR G14-A/G14-E

SUSPENSION AND STEERING

Condition	Possible Cause	Correction
HARD OR ERRATIC STEERING	1. Incorrect tire pressure.	Inflate tires to recommended pressures.
	2. Insufficient or incorrect lubrication.	Lubricate as required.
	3. Suspension, steering or linkage parts damaged or misaligned.	Repair or replace parts as necessary.
	4. Incorrect front wheel alignment.	Adjust wheel alignment angles.
	5. Incorrect steering gear adjustment.	Adjust steering gear.
	6. Sagging springs.	Replace shock absorber
PLAY OR LOOSENESS IN STEERING	1. Steering wheel loose.	Inspect splines and repair as necessary. Tighten steering wheel nut.
	2. Steering linkage or attaching parts loose or worn.	Tighten, adjust, or replace faulty components.
	3. Pitman arm loose.	Inspect shaft splines and repair as necessary. Torque attaching nut and lock in place with lock washer plate.
	4. Steering gear attaching bolts loose.	Tighten bolts.
	5. Loose or worn wheel bearings.	Adjust or replace bearings.
	6. Steering gear adjustment incorrect or parts badly worn.	Adjust gear or replace defective parts.
WHEEL SHIMMY OR VIBRATION	1. Incorrect tire pressure.	Inflate tires to recommended pressures.
	2. Wheels, tires, or brake drums out-of-round.	Inspect parts and replace unacceptable out-of-round parts.
	3. Inoperative, worn, or loose shock absorbers or mounting parts.	Repair or replace shock absorbers or mountings.
	4. Loose or worn steering or suspension parts.	Tighten or replace as necessary.
	5. Loose or worn wheel bearings.	Adjust or replace bearings.
	6. Incorrect steering gear adjustments.	Adjust steering gear.
	7. Incorrect front wheel alignment.	Correct front wheel alignment.
TIRE WEAR	1. Incorrect tire pressure.	Inflate tires to recommended pressures.
	2. Failure to rotate tires.	Rotate tires.
	3. Brakes grabbing.	Adjust or repair brakes.
	4. Incorrect front wheel alignment.	Align front wheels.
	5. Broken or damaged steering and suspension parts.	Repair or replace defective parts.
	6. Wheel runout.	Replace faulty wheel.
	7. Excessive speed on turns.	Make driver aware of condition.
CAR PULLS TO ONE SIDE	1. Incorrect tire pressure.	Inflate tires to recommended pressures.
	2. Front tires with uneven tread depth, wear pattern, or different design.	Install tires of same construction and reasonably even tread depth and wear pattern.
	3. Incorret front wheel alignment.	Align front wheels.
	4. Brakes dragging.	Adjust or repair brakes.
	5. Pulling due to uneven tire construction.	Replace faulty tire.

TROUBLESHOOTING FOR G14-A

TROUBLESHOOTING CHART

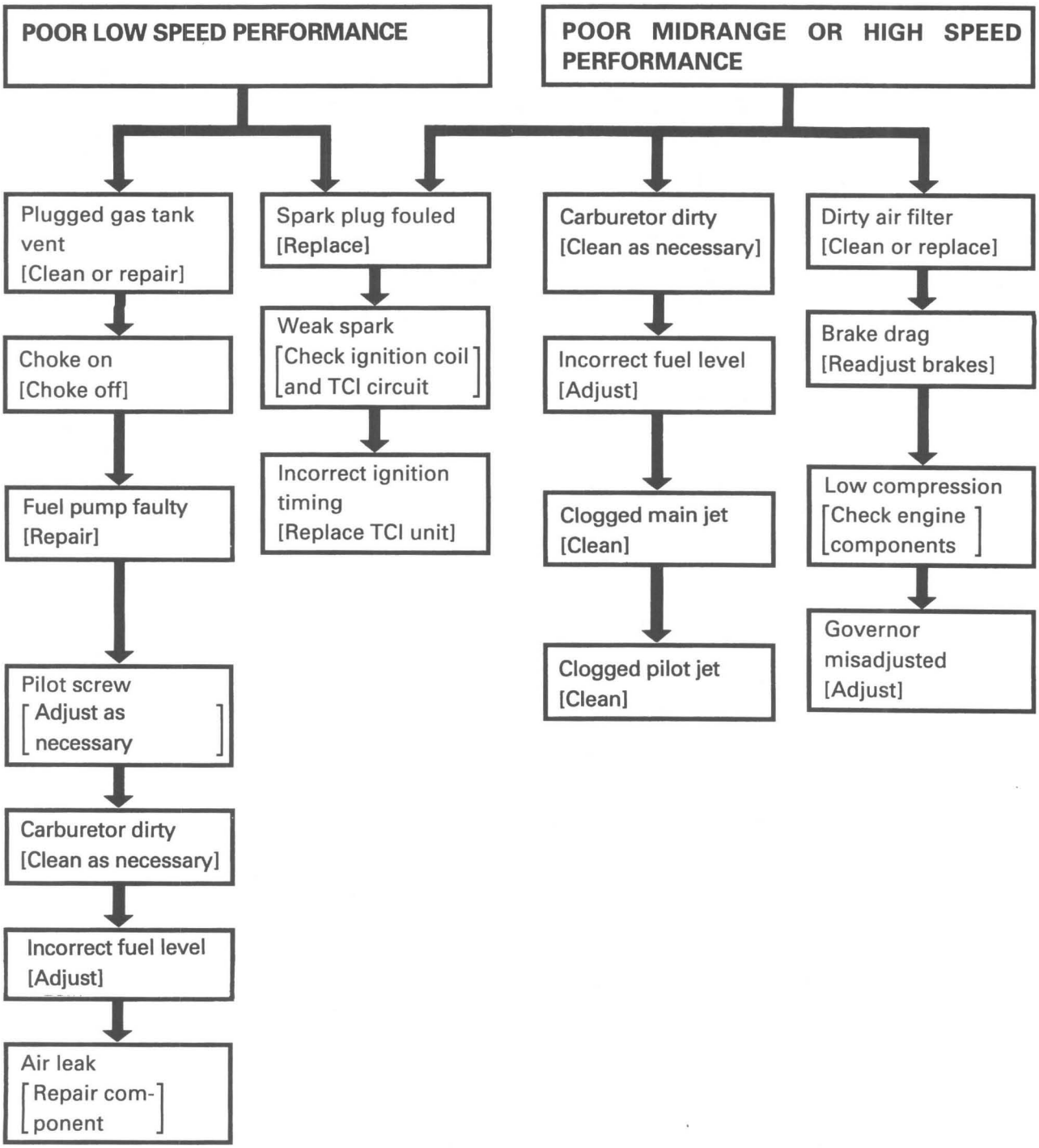

ENGINE

Condition	Possible Cause	Correction
ENGINE WILL NOT START	1. Weak battery.	Test battery specific gravity. Recharge or replace as necessary.
	2. Corroded or loose battery connections.	Clean and tighten battery connection. Apply a coat of grease to terminals.
	3. Faulty starter.	Repair starter-generator.
	4. Moisture on ignition leads and spark plug cap.	Wipe leads and cap clean and dry.
	5. Faulty ignition circuit leads.	Replace any cracked or shorted leads.
	6. Open or shorted primary ignition circuit.	Trace primary ignition circuit and repair as necessary.
	7. Faulty coil.	Test and replace if necessary.
	8. Incorrect spark plug gap.	Set gap correctly.
	9. Incorrect ignition timing.	Replace TCI unit.
	10. Dirt or water in fuel line or carburetor.	Clean lines and carburetor. Replace filter.
	11. Carburetor flooded.	Check fuel passages for contamination.
	12. Incorrect carburetor float setting.	Adjust float level – check seats.
	13. Faulty fuel pump.	Install new fuel pump.
	14. Carburetor percolating. No fuel in the carburetor.	Measure float level. Check bowl vent.
ENGINE STALLS	1. Incorrect choke adjustment	Adjust choke.
	2. Pilot screw mixture too lean or too rich.	Adjust carburetor.
	3. Incorrect carburetor float setting.	Adjust float setting.
	4. Leak in intake manifold	Inspect intake manifold gasket and replace if necessary.
	5. Incorrect ignition wiring.	Install correct wiring.
	6. Faulty coil.	Test and replace if necessary.
ENGINE LOSS OF POWER	1. Incorrect ignition timing.	Replace TCI unit.
	2. Dirty or incorrectly gapped spark plug.	Replace plug and set gap.
	3. Dirt or water in fuel line, carburetor or filter	Clean lines, carburetor and replace filter.

ELECTRICAL

Condition	Possible Cause	Correction
STARTER DOES NOT TURN	1. Weak battery.	Test battery specific gravity. Recharge or replace as necessary.
	2. Corroded or loose battery connection.	Clean and tighten battery connections. Apply a coat of grease to terminals.
	3. Open or shorted solenoid coil circuit.	Trace solenoid coil circuit and repair as necessary.
	4. Faulty solenoid relay.	Test and replace if necessary.
	5. Faulty main, or accelerator stop switches.	Replace switches if necessary.
GENERATOR DOES NOT CHARGE	1. Corroded or loose battery connections.	Clean and tighten battery connections. Apply a coat of grease to terminals.
	2. Faulty starter-generator.	Repair starter-generator.

STARTER-GENERATOR

Condition	Possible Cause	Correction
STARTER DOES NOT TURN	1. Brushes are off commutator.	Adjust properly or replace.
	2. Starter-generator terminals are loose or corroded.	Tighten or clean.
	3. Leads are broken.	Check for breaks at bend or joint. Replace or repair leads.
	4. Field coil is open.	Repair or replace at a service shop.
	5. Armature coil is open.	Repair or replace at a service shop.
STARTER TURNS SLOWLY	1. Terminals are loose or corroded.	Retighten or clean.
	2. Leads are nearly broken or connections are faulty.	Check for any defect of leads at bend or joint. Replace leads or repair connections.
	3. Mechanical problem inside motor.	Check.
STARTER IS NOISY	1. Bolts are loose.	Retighten.
	2. Starter-generator has foreign matter inside.	Clean motor interior.
	3. Bearings are faulty.	Replace.
	4. Bearings contain foreign matter.	Replace.
	5. Bearings need grease.	Replace.
BEARING HEAT EXCESSIVE	1. Bearings are faulty or lack grease.	Replace.
	2. Improperly installed.	Adjust, replace if necessary.
POOR MOTOR PERFORMANCE	1. Load exceeds specification.	Adjust load to spec.
	2. Armature is out of round.	Repair or replace at service shop.
	3. Brushes are worn beyond limits.	Replace.
	4. Commutator is excessively rough.	Smooth with sandpaper (#500 ~ 600).
	5. High mica segment.	Recondition at service shop.
	6. Commutator is dirty with oil or dust.	Clean with a cleaner, and dry cloth.
	7. Armature coil is shorted or broken.	Repair or replace at service shop.
VIBRATION	1. Starter-generator installed loosely.	Retighten.
	2. Starter-generator turns irregularly.	Repair or replace at service shop.

TROUBLESHOOTING FOR G14-E

TROUBLESHOOTING CHECKING PROCEDURE

- Motor does not run
- Jerky running
- Poor power
- Low speed
- Poor low speed
- Bad acceleration
- Hasty starting
- Abrupt starting

↓

BATTERY CONDITION CHECK → Refer to page 7-42

OK ↓

FUSE CHECK → Refer to page 7-42

OK ↓

DIODE CHECK → Refer to page 7-43

OK ↓

MAIN SWITCH CHECK → Refer to page 7-43

OK ↓

ACCELERATOR STOP SWITCH → Refer to page 7-44

OK ↓

SOLENOID RELAY CHECK → Refer to page 7-45

OK ↓

SHIFT SWITCH CHECK → Refer to page 7-45

OK ↓

THROTTLE SENSOR CHECK → Refer to page 7-46

OK ↓

TRACTION MOTOR CHECK → Refer to page 7-47

OK ↓

CONTROLLER CHECK → Refer to page 7-47

OK ↓

WIRING CONNECTION CHECK → Refer to page 7-49

ELECTRICAL

Should any one of the troubles (1 to 8) below occur, it is advisable to check for the possible cause in the order specified.

1. If batteries tend to discharge much faster than specified after being charged properly.
2. When the car does not move.
3. When the car moves forward but not backward, or it moves backward but not forward.
4. When the acceleration becomes rough, uneven or jerky.
5. The car abruptly starts off the moment the main switch is set to "ON" position.
6. The car abruptly stops.
7. The car's top speed slows.
8. The motor does not stop when the accelerator pedal is released.

CHECK ITEMS
1. If batteries tend to discharge much faster then normal after being charged properly.
A. Batteries, charger and charging circuit 1) Check battery terminals for tightness or corrosion. 2) Check the battery electrolyte level. 3) Check the specific gravity of battery electrolyte. 4) Check battery cells for damage. 5) Check the charging circuit for loose connections, broken wires, or separated connections. 6) Check whether the battery charger output is adjusted correctly, and that proper A.C. voltage (115 Volts, 15 Amp) exists at the battery charger A.C. connection. 7) Check that the charging receptacle is tightly connected to the charger plug. 8) Check the charge cord for damage. 9) Check battery capacity with a discharge tester. B. Solenoid control circuit and traction motor circuit 10) Check the solenoid control circuit and traction motor circuit for loose connectors. (Check for loose connectors on the speed controller, solenoid relay and traction motor.) 11) Check the solenoid relay for dirty, burned or worn-contact points. 12) Check he traction motor for worn brushes, misaligned brushes, or dirty commutator. C. Parts other than circuits 13) Check the brake for proper play. (Check if the brakes are dragging.) 14) Check whether the throttle position sensor is properly adjusted. 15) Check whether the tire pressure is low. [Tire pressure: 137 kPa (1.4 kgf/cm^2, 20 psi) G14-E] 108 kPa (1.1 kgf/cm^2, 16 psi) G14-A] 16) Check for excessive wheel bearing friction. 17) Check the differential for oil leakage or malfunction. 18) Check whether the operation of controls is correct. Except when low speed operation is necessary, the car should be run with the accelerator pedal fully depressed as much as possible to minimize power consumption.
2. When the car does not move.
1) Check whether the batteries are discharged. 2) Check the battery posts and battery terminals for loose or separated connections, or corrosion. 3) Place the main switch in the "ON" position and step on the accelerator pedal to check whether a click is heard. If no click, check the solenoid relay, main switch, accelerator stop switch, cut-off switch and charging receptacle. 4) Check traction motor, for loose or separated connections. 5) Check the traction motor for worn or separated brushes, or dirty commutator. Also check the armature circuits for broken wires or shortcircuit.

CHECK ITEMS
3. When the car moves forward but not backward, or it moves backward but not forward.
• Check the forward-reverse switch 1) Check the operation of the forward-reverse switch. Check the motor circuit for loose or separated connections. 2) Check the contact of the forward-reverse switch.
4. When the acceleration becomes rough, uneven or jerky.
1) Check for loose or separated connections between the speed controller and solenoid relay. 2) Check for loose terminal. 3) Check the throttle sensor.
5. The car abruptly starts off the moment the main switch is set to the "ON" position.
1) Check the engine stop switch and solenoid relay for stuck contact points. 2) Check for stuck accelerator pedal. 3) Check the throttle sensor.
6. The car abruptly stops. Refer to Item 2 or 3 above.
7. The car's top speed slows.
1) Check the batteries for sulfation and discharge capacity. Check the battery electrolyte level and charged condition. 2) Check the batteries, speed controller and traction motor for loose connections. 3) Check the throttle sensor. 4) Check for wires shorted or separated at connections. 5) Check the traction motor for worn or separated brushes, or dirty commutator.
8. The motor does not stop even when the accelerator pedal is released.
• The motor stops if the main switch is placed in the OFF position: 1) Check the engine stop switch. • The motor does not stop even if the main switch is placed in the OFF position: 2) Check the solenoid relay for stuck contact points. 3) Check the engine stop switch for stuck contacts. 4) Check the main switch.

TRACTION MOTOR

Condition	Possible Cause	Correction
MOTOR DOES NOT TURN	1. Brushes are off commutator.	Adjust properly or replace.
	2. Motor terminals are loose or corroded.	Tighten or clean.
	3. Leads are broken.	Check for breaks at bend or joint. Replace or repair leads.
	4. Field coil is open.	Repair or replace at a service shop.
	5. Armature coil is open.	Repair or replace at a service shop.
MOTOR TURNS SLOWLY	1. Terminals are loose or corroded.	Retighten or clean.
	2. Leads are nearly broken or connections are faulty.	Check for any defect of leads at bend or joint. Replace leads or repair connections.
	3. Mechanical problem inside motor.	Check.
MOTOR IS NOISY	1. Bolts are loose.	Retighten.
	2. Motor has foreign matter inside.	Clean motor interior.
	3. Bearings are faulty.	Replace.
	4. Bearings contain foreign matter.	Replace.
	5. Bearings need grease.	Replace.
BEARING HEAT EXCESSIVE	1. Bearings are faulty or lack grease.	Replace.
	2. Improperly installed	Adjust, replace if necessary.
POOR MOTOR PERFORMANCE	1. Load exceeds specification.	Adjust load to spec.
	2. Armature is out of round.	Repair or replace at service shop.
	3. Brushes are worn beyond limits.	Replace.
	4. Commutator is excessively rough.	Smooth with sandpaper (#500 ~ 600).
	5. High mica segment.	Recondition at service shop.
	6. Commutator is dirty with oil or dust.	Clean with a cleaner, and dry cloth.
	7. Armature coil is shorted or broken.	Repair or replace at service shop.
VIBRATION	1. Motor installed loosely.	Retighten.
	2. Motor turns irregularly.	Repair or replace at service shop.

CHAPTER 9
SPECIFICATIONS

SPECIFICATIONS

GENERAL SPECIFICATIONS

Item \ Model	G14-A	G14-E
Model Code Frame Serial Number	JN3 JN3-100101 ~	JN4 JN4-100101 ~
Dimensions:		
Overall Length	2385 mm (9.39 in)	←
Overall Width	1200 mm (47.2 in)	←
Overall Height (Steering height)	1190 mm (46.8 in)	←
Height of Floor	300 mm (11.8 in)	←
Wheelbase	1629 mm (64.1 in)	←
Tread:		
Front	870 mm (34.3 in)	←
Rear	980 mm (38.6 in)	←
Min. Ground Clearance	97 mm (3.8 in)	←
Weight:		
Dry Weight (without battery)	300 kg (661 lb)	254 kg (560 lb)
Performance:		
Maximum Loading Limit	250 kg (550 lb)	←
Maximum Speed	19-24 km/h (12-15 mph)	←
Starter Generator Red Zone	4,000 r/min	—
Cranking Speed	Appx. 800 r/min	—
Motor Red Zone	5500 r/min	
Minimum Turning Radius	3.0 m (118 in)	←
Seating Capacity	2 persons	←
Hill Climbing Ability	30° on pavement	15° on pavement

MAINTENANCE SPECIFICATIONS FOR G14-A

ENGINE

Item	G14-A
Description:	
Engine Type	Forced air cooled 4-stroke OHV gasoline
Number of Cylinder	Single
Displacement	300 cm^3
Bore x Stroke	75 x 68 mm (2.95 x 2.68 in)
Compression Ratio	8.1 : 1
Compression Pressure (at sea level)	Standard : 1,250 kPa (12.5 kg/cm^2, 178 psi) Minimum : 1,000 kPa (10.0 kg/cm^2, 142 psi) Maximum 1,400 kPa (14.0 kg/cm^2, 199 psi)
Starting System	Starter
Ignition System	T.C.I.
Lubrication System	Wet sump
Cylinder Head:	
Combustion Chamber Volume (With spark plug)	41.0 ~ 41.8
Head Gasket Thickness 	* 0.2 mm (0.008 in)
Cylinder:	
Material	Cast iron sleeved aluminum (crankcase)
Bore Size	75 mm (2.95 in)
Taper/Limit	0.02 mm (0.0008 in)/0.15 mm (0.006 in)
Out of Round/Limit	0.02 mm (0.0008 in)/0.15 mm (0.006 in)
Piston :	
Piston-to-Cylinder Clearance	0.03 ~ 0.05 mm (0.0012 ~ 0.0020 in)
< Limit >	< 0.1 mm (0.004 in) >
Oversize: 1	0.25 mm (0.01 in)
2	0.50 mm (0.02 in)
Piston Pin Outside Diameter	17.995 ~ 18.000 mm (0.7085 ~ 0.7087 in)
Piston Pin-to-Piston Clearance	0.004 ~ 0.020 mm (0.0002 ~ 0.0008 in)
< Limit >	< 0.07 mm (0.003 in) >
Piston Ring:	
Top Ring: 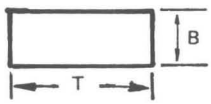	
Type	Plain
Dimensions (B x T)	2.0 x 3.2 mm (0.079 x 0.126 in)
End Gap (Installed)	0.2 ~ 0.4 mm (0.008 ~ 0.016 in)
< Limit >	< 1.0 mm (0.04 in) >
Side Clearance (Installed)	0.03 ~ 0.05 mm (0.0012 ~ 0.0020 in)
< Limit >	< 0.07 mm (0.0028 in) >
Engine Oil :	
Recommended Oil	YAMALUBE 4 cycle oil or SAE10 W30 type SE, SF, or SG
Oil Change Quantity	1.0 U.S. qt (0.9 L, 0.19 Imp gal)
Oil Capacity	1.16 U.S. qt (1.1 L, 0.24 Imp gal)

Item	G14-A
2nd Ring:	
Type	Plain (Taper face)
Dimensions (B x T)	2.0 x 3.2 mm (0.079 x 0.126 in)
End Gap (Installed)	0.2 ~ 0.4 mm (0.008 ~ 0.016 in)
< Limit >	< 1.0 mm (0.04 in) >
Side Clearance	0.03 ~ 0.07 mm (0.0012 ~ 0.0028 in)
< Limit > (Installed)	< 0.09 mm (0.0035 in) >
Oil Ring:	
Dimensions (B x T)	2.80 x 2.80 mm (0.110 x 0.116 in)
End Gap (Installed)	0.2 ~ 0.7 mm (0.008 ~ 0.028 in)
Small End Bearing:	
Type	None
Big End Bearing:	
Type	Plain bearing
Crankshaft:	
Crankshaft Assembly Width "A"	109.65 ~ 110.05 mm (4.317 ~ 4.333 in)
Crankshaft Deflection "B"	0.05 mm (0.0020 in)
Connecting Rod Big End Side Clearance "C"	0.2 ~ 0.5 mm (0.008 ~ 0.020 in)
Crank Pin Outside Diameter	31.95 ~ 31.97 mm (1.258 ~ 1.259 in)
Crank Pin Type	Solid crankshaft
Crank Bearing Type (Left) x Q'ty	#6307 c3 x 1 pc
Crank Bearing Type (Right) x Q'ty	#6306 c3 x 1 pc
Crank Oil Seal Type (Left) x Q'ty	SD 35 50 8 x 1 pc
Crank Oil Seal Type (Right) x Q'ty	SD 30 45 8 x 1 pc
Camshaft:	
Drive Method	Gear drive
Cam Cap Inside Diameter	16.00 ~ 16.05 mm (0.630 ~ 0.632 in)
Camshaft Outside Diameter	15.90 ~ 15.99 mm (0.626 ~ 0.630 in)
Shaft-to-Cap Clearance	0.01 ~ 0.05 mm (0.0004 ~ 0.0020 in)/
<Limit>	<0.15 mm (0.0059 in)>

Item	G14-A
Cam Dimensions:	
Intake "A"	29.16 ~ 29.28 mm (1.148 ~ 1.153 in)
"B"	24.11 ~ 24.22 mm (0.949 ~ 0.954 in)
"C"	5.16 ~ 5.28 mm (0.203 ~ 0.208 in)
Exhaust "A"	29.20 ~ 29.32 mm (1.150 ~ 1.154 in)
"B"	24.15 ~ 24.25 mm (0.951 ~ 0.955 in)
"C"	5.20 ~ 5.32 mm (0.205 ~ 0.209 in)
Rocker Arm/Rocker Arm Shaft:	
Arm Inside Diameter	12.00 ~ 12.04 mm (0.472 ~ 0.474 in)
Shaft Outside Diameter	11.90 ~ 11.99 mm (0.469 ~ 0.472 in)
Arm-to-Shaft Clearance	0.01 ~ 0.07 mm (0.0004 ~ 0.0028 in)
Valve, Valve Seat, Valve Guide:	
Valve Clearance (Cold) IN.	0.1 mm (0.004 in)
EX.	0.1 mm (0.004 in)
Valve Dimensions:	
"A" Head Diameter IN.	30 mm (1.18 in)
EX.	26 mm (1.02 in)
"B" Face Width IN.	2.26 mm (0.089 in)
EX.	2.26 mm (0.089 in)
"C" Seat Limit Width IN.	1.4 mm (0.055 in)
EX.	1.4 mm (0.055 in)
"D" Margin Thickness Limit IN.	0.8 mm (0.032 in)
EX.	0.6 mm (0.024 in)
Valve Spring Free Length	36.2 mm
<Limit>	<35.0 mm>
Spring Tilt	2.5° or 1.6 mm
Spring Force (Installed Length)	8.0 kg (29.0 mm)
Throttle Cable Freeplay:	
Cable 1	0.2 ~ 0.5 mm (0.008 ~ 0.020 in)
Cable 2	0.5 mm (0.020 in)
Choke Cable Freeplay	1.0 mm (0.040 in)
Engine Tensioner Bracket Freeplay	2.0 mm (0.08 in)

Item		G14-A
Carburetor:		
Model/Maker		BV26-18/MIKUNI
I.D. Mark		JN3-00
Venturi Diameter	(Ven. T.)	ø18
Main Jet	(M.J.)	#102.5
Main Air Jet	(M.A.J.)	ø2.5
Pilot Jet	(P.J.)	#60
Pilot Air Jet	(P.A.J.)	ø1.2
Throttle Valve	(Th.V.)	#120
Valve Seat	(V.S.)	ø1.2
By-pass (1)	(B.P. 1)	ø0.6
By-pass (2)	(B.P. 2)	ø0.7
By-pass (3)	(B.P. 3)	ø0.9
By-pass (4)	(B.P. 4)	ø0.6
Pilot Outlet	(P.O.)	ø1.0
Pilot Screw	(P.S.)	1 turn out
Float Height	(F.H.)	14.5 mm (0.57 in)
Engine Idling Speed *		1200 r/min
*Firing beginning point		
Fuel Pump:		
Manufacturer/Type		MIKUNI/DF-52-150 (Diaphragm)
Fuel Tank:		
Recommended Fuel		Unleaded regular gasoline
Fuel Rating P.O.N (#1)		MIN. 87 octane
Fuel Tank Capacity		23.0 L (20.2 Imp qt, 6.1 US gal)
Fuel Tank Material/Color		Polyethylene/Natural

TRANSMISSION

Item	G14-A
Transmission:	
Type	V-belt automatic centrifugal engagement
Primary Reduction Ratio	3.1 : 1 ~ 0.8 : 1
Shift r/min	3,400 r/min
Primary Spring:	None
Secondary Spring:	
Outside Diameter x Wire Diameter	54.5 x 4.0 mm (2.15 x 0.16 in)
No. of Turns/Free Length	8.25/100 mm (3.94 in)
Color Code	Black
Twist Angle (Preload setting)	30° (B-3)
Torque Cam Angle	44 deg
Sheave Center to Center Distance	270.5 mm
Sheave Off-Set	24.3 mm
V-belt Width and Outer Line Length	31 x 1,010 mm (1.22 x 39.76 in)
V-belt Wear Limit	27 mm (1.06 in)

Item	G14-A
Differential/Reduction Gear:	
Secondary Reduction System	Helical gear
Secondary Reduction Ratio:	
Forward	11.34 : 1
Reverse	15.25 : 1
Differential Type	Bevel gear
Lubricant/Capacity	SAE 90 gear oil/800 cc (0.70 Imp qt, 0.85 US qt)
Governor:	
Type	Oil bath flyweight
Adjustment	Screw with lock nut
Factory Speed Setting	19 km/h (12 mph)

CHASSIS

Item	G14-A
Frame:	
Type	Ladder type pipe structure
Material/Color	Tubular steel (STKM)/Yamaha Black
Front & Rear Cowling:	
Type	Injection Molding
Material	Thermoplastic Olefin
Color	Std: Ivory Delta Opt: Kingstone Grey Sunfast Red Teal Green
Front Panel:	
Type	Injection Molding
Material	Thermoplastic Olefin
Color	Black
Seat:	
Seat cover:	
Material	Vinyle chloride leather
Color	Ivory white
Seat Cushion:	
Material	Urethane foam
Bumper:	
Front	Polypropylene (Blow molding)
Rear	Polypropylene (Blow molding)

Item	G14-A
Steering System:	
Type	Worm and pin
Steering Angle (L.H.)	1.5 turn
(R.H.)	1.5 turn
Turning Radius	3.0 m (118 in)
Lubricant/Capacity	Grease/90 cc (3.17 Imp oz, 3.04 US oz)
Front Axle:	
Type	Eliot kingpin type
Toe-in/Fully Loaded	1 ~ 11 mm (0.04 ~ 0.43 in)/Zero mm (Zero in)
Camber (Loaded)	Zero deg
Caster	7 deg
Kingpin Inclination	3 deg
Rear Axle:	
Rear Wheel Axle Type	Semi-floating type
Toe-in	Zero mm (Zero in)
Camber	Zero deg
Front Suspension:	
Type	Single swingarm (independent suspension) Coil spring with hydraulic shock absorbers (double action type)
Spring Rate	6.63 kgf/mm ± 10%
Shock Absorber Free Length	263.5 mm (10.37 in)
Damper Type	Oil damper (double action/both compression and tension)
Rear Suspension:	
Type	Axle type trailing arm (unit swing) Coil springs with hydraulic shock absorbers (double action type)
Spring Rate	1.83 ~ 6.30 kgf/mm ± 10%
Shock Absorber Free Length	315.3 mm (12.41 in)
Damper Type	Oil damper (double action/Both comp. & tens.)
Brakes:	
Brake System	Mechanical brake linkage to individual drum brakes on each rear wheel with self-adjusting brake shoe.
Type of Brake	Dual internal expanding shoe. Leading/Trailing shoes (self-adjusting)
Lining Thickness Std/Min.	4 mm (0.16 in)/0.75 mm (0.029 in)
Brake Drum Inside Dia.	161 mm (6.34 in)
Linkage Adjustment (Brake Cable Free Play)	25 ~ 30 mm (0.98 ~ 1.18 in)

Item	G14-A
Parking Brake: Type Release Timing (Bolt head round parallel to arm)	 Foot type; Parking brake with automatic release 1 mm (0.04 in)
Wheel: Tire Type (Pattern): Front and Rear Tire Size: Front Rear Rim Size: Tire Pressure: Front/Rear	 Tubeless (Sawtooth tread pattern) 18 x 8.50 – 8.00/4 PR 18 x 8.50 – 8.00/4 PR 7.00 - I - 8.00 108 kPa (1.1 kg/cm^2, 16 psi)

ELECTRICAL

Item	G14-A
Voltage:	12V Negative ground
Ignition System: Type Model/Manufacturer Pickup Coil Resistance (Color code) Output (Min.) Dynamic Timing	 T.C.I. JN3-00/YAMAHA 350Ω ± 20% at 20°C (68°F) (White/Red – White/Black) PEAK 15V AC at approximate cranking speed 800 r/min 32° B.T.D.C. at 3,000 r/min
Ignition Advance Curve: 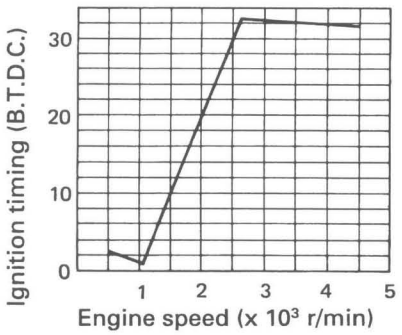	
Ignition: Model/Manufacturer Spark Gap Primary Winding Resistance Secondary Winding Resistance Diode (Yes or No)	 JF2-00/YAMAHA 11 mm (0.43 in)/3,000 r/min 2.6Ω ± 20% at 20°C (68°F) (Orange – Red/White) 11.9 kΩ ± 20% at 20°C (68°F) (High tension cord – Red/White) No

Item	G14-A
Spark Plug:	
Type/Manufacturer	BPR2ES or BPR4ES/NGK
Spark Plug Gap	0.7 ~ 0.8 mm (0.028 ~ 0.031 in)
Thread Size	M14 x P1.25
Spark Plug Cap:	
Type	Resistor type
Resistance	3.75 ~ 6.25 kΩ at 20°C (68°F)
T.C.I. Unit:	
Model/Manufacturer	JN3-00/YAMAHA
Charging · Starting/System:	
Type	Starter generator
Model/Manufacturer	HITACHI
Starting Output	0.6 kw
Charging Output	14V-15A/5,000 r/min
Armature Coil Resistance	0.010 ~ 0.016Ω at 20°C (68°F) (A1-A2)
Field Coil Resistance	
Shunt Coil (Battery Charging)	4.5 ~ 5.5Ω at 20°C (68°F) (Red – Green)
Series Coil (Starting)	0.005 ~ 0.007Ω at 20°C (68°F) (F1– F2)
Starter belt tension	8 ~ 12 mm (0.31 ~ 0.47 in)/10 kg (22 lbs)
Brush Length Std/Min.	26.5 mm (0.9 in)/16 mm (0.63 in)
Spring Pressure/Q'ty	300 ~ 500 g (10.6 ~ 17.6 oz)4 pcs.
Commutator Outside Dia.	40.9 ~ 41.1 mm (1.61 ~ 1.62 in)
Mica Undercut/No. of Slots	0.7 mm (0.028 in)/41 pcs
Voltage Regulator:	
Type	Transistor
Model/Manufacturer	JF2-00/SHINDENGEN
Regulated Voltage (No lead)	14.3 ~ 15.3V
Solenoid Relay:	
Model/Manufacturer	586-117111/ESSEX CONTROLS
Amperage Rating	100A
Solenoid Coil Resistance (Z)	Z: 189Ω ± 10%
Resistance (X)	X: OFF ∞ ON 0Ω
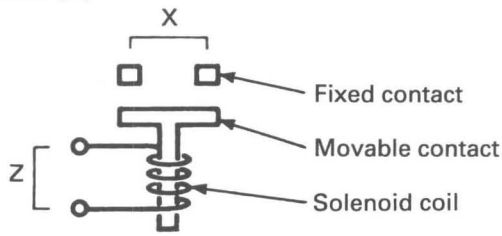	
Battery:	
Model	BCI Group 24 (12V-48AH)
Capacity	RC : minimum 60 min CCA : minimum 400A
Specific Gravity	1.260 at 20° C (68° F)
Dimension (L x W x H)	6-3/4 x 10-1/4 x 9 in

Item	G14-A
Back Buzzer:	
Type	Piegoelectric buzzer (Intermittent)
Model/Manufacturer	JN3-00/YAMAHA
Frequency	2.4 ~ 3.6 kHz
Current	Less than 25 mA
Fuse:	
Amperage x Q'ty	
Neg. Fuse	10A x 1

MAINTENANCE SPECIFICATIONS FOR G14-E

TRANSMISSION

Item	G14-E
Differential/Reduction Gear:	
Reduction Gear Ratio/Gear Type	11.96 (60/23 x 78/17) Helical
Differential Type	Bevel gear
Oil Type/Capacity	SAE 90 Gear oil/300 cc (0.26 Imp qt, 0.32 US qt)

CHASSIS

Item	G14-E
Frame:	
Type	Ladder type pipe structure
Material/Color	Tubular Steel (STKM)/Yamaha Black
Front & Rear Cowling:	
Type	Injection Molding
Material	Thermal Plastic Olefin
Color	Std: Ivory Delta Opt: Kingstone Grey Sunfast Red Teal Green
Front Panel:	
Type	Injection Molding
Material	Thermal Plastic Olefin
Color	Black
Seat:	
Seat cover:	
Material	Vinyl Chloride Leather
Color	Ivory White
Seat Cushion:	
Material	Urethane foam
Bumper:	
Front	Polypropylene (Blow molding)
Rear	Polypropylene (Blow molding)
Steering System:	
Type	Worm and Pin
Steering Angle (L.H.)	1.5 turn
(R.H.)	1.5 turn
Turning Radius	2.8 m (113 in)
Lubricant/Capacity	Grease/90 cc (3.17 Imp oz, 3.04 US oz)

Item	G14-E
Front Axle:	
Type	Eliot Kingpin Type
Toe-in/Fully Loaded	1 ~ 11 mm (0.04 ~ 0.43 in)/Zero mm (Zero in)
Camber (Loaded)	Zero deg
Caster	7 deg
Kingpin Inclination	3 deg
Rear Axle:	
Rear Wheel Axle Type	Semi-floating type
Toe-in	Zero mm (Zero in)
Camber	Zero deg
Front Suspension:	
Type	Single swingarm (independent suspension) Coil springs with hydraulic shock absorbers (double action type)
Spring Rate	7.34 kgf/mm ± 10%
Shock Absorber Free Length	264.2 ± 2 mm
Damper Type	Oil damper (double action/both compression and tension)
Rear Suspension:	
Type	Axle type trailing arm (unit swing) Coil springs with hydraulic shock absorbers (double action type)
Spring Rate	3.63 N/mm (3.63 kg/mm, 203/lb/in)
Shock Absorber Free Length	316 mm (12.44 in)
Damper Type	Oil damper (Double action/Both Comp. & Tens.)
Brakes:	
Brake System	Mechanical brake linkage to individual drum brakes on each rear wheel with self-adjusting brake shoe.
Type of Brake	Dual internal expanding shoe. Leading/Trailing shoes (self-adjusting)
Lining Thickness Std/Min.	4 mm (0.16 in) 0.75 mm (0.029 in)
Brake Drum Inside Dia.	160 mm (6.30 in)
Linkage Adjustment (Brake cable free play)	25 ~ 30 mm (0.098 ~ 1.18 in)
Parking Brake:	
Type	Foot type; Parking brake with automatic release
Release Timing (Bolt head round parallel to arm)	1 mm (0.04 in)

Item	G14-E
Wheel:	
Tire Type (Pattern):	
Front and Rear	Tubeless (Sawtooth tread pattern)
Tire Size:	
Front	18 x 8.50 – 8.00/4 PR
Rear	18 x 8.50 – 8.00/4 PR
Rim Size	7.00 - I - 8.00
Tire Pressure:	
Front/Rear	137 kPa (1.4 kg/cm^2, 20 psi)

ELECTRICAL

Item	G14-E
Voltage:	36V DC, 6V Battery x 6 pcs series (locally supplied)
Traction Motor:	
Model/Manufacturer	H/S 58C58JB56184/GE
Rated Voltage	36V DC
Power/Horsepower	1.9 kw/2.5 hp at 3300 r/min
Current	62A
Voltage	36V
Torque	8.7 Nm (0.87 kg.m, 6.3 ft.lb)
Revolutions	3,300 r/min
Allowable Maximum Revolutions	5,500 r/min
Direction of Rotation	Clockwise and counterclockwise
Brush Length-Std/Min.	34.3 mm (1.35 in)/14.5 mm (0.57 in)
Brush Spring Pressure-Max./Min.	720 ~ 1,080 g (24.3 ~ 36.5 oz)/450 g (15.2 oz)
Mica Undercut-Std/Min.	0.79 mm (0.031 in)/0.25 mm (0.010 in)
Armature Coil Resistance	0.0228 ~ 0.0232Ω at 20°C (68°F)
Field Coil Resistance	0.005 ~ 0.0064Ω at 20°C (68°F)
Insulation Resistance (All measurements)	1MΩ
Motor Controller:	FET (Field Effect Transistor) chopper
Model/Manufacturer	JN4-00/YAMAHA
Solenoid Relay:	
Model/Manufacturer	586-117111/ESSEX CONTROLS
Amperage Rating	100A
Solenoid Coil Resistance (Z)	Z: 189Ω ± 10%
Resistance (X)	X: OFF ∞ ON 0Ω

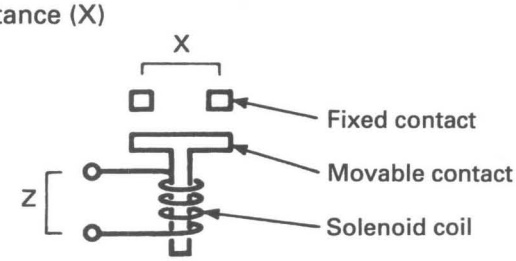

Item	G14-E
Shift Switch:	
Voltage/Maximum Current Capacity	36V DC/300A
Movable Contact	
Material	Copper
Thickness-Std	3 mm (0.12 in)
Stationary Contact	
Material	Copper
Thickness-Std	4 mm (0.16 in)
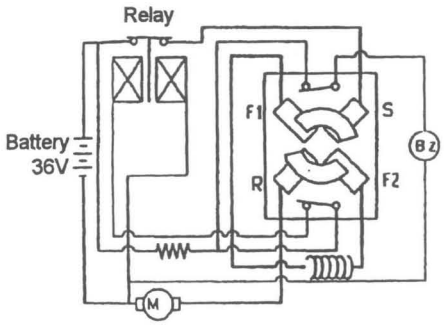	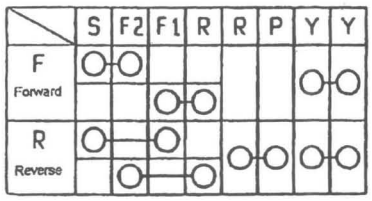
Battery:	Locally supplied
Type	6V Electric vehicle deep cycle
Quantity/Connection	6 pcs/Series
Minimum Recommended Output	107 minutes at 75A or 185 AH
Specific Gravity	As specified by manufacturer at 80°F
Maximum Difference (at 1.200 corrected min.)	0.050
[Battery Arrangement and Terminal Connections]	
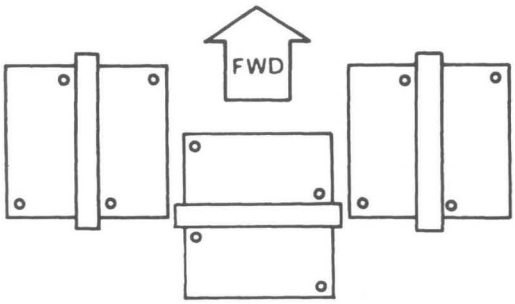	

Item	G14-E
Back Buzzer:	
Type	Piegoelectric buzzer (Intermittent)
Model/Manufacturer	JN4-00/YAHAMA
Frequency	2.4 ~ 3.6 kHz
Current	Less than 25 mA
Fuse:	
Amperage	
Plus Fuse	10A

TIGHTENING TORQUE

ENGINE (FOR G14-A)

Part to be tightened	Part name	Thread size	Tightening torque			Remarks
			Nm	m·kg	ft·lb	
Spark plug		M14 x P1.25	20	2.0	14	
Air shroud x Cylinder Head or Crankcase	Bolt	M6 x P1.0	8	0.8	5.8	
Air shroud Cylinder 1 x 2	Pan head	M6 x P1.0	4	0.4	2.9	
Cylinder Head:	Bolt	M8 x P1.25	28	2.8	20	
Cylinder Head Cover	Bolt	M6 x P1.0	10	1.0	7.2	
Cylinder Head x Cylinder Head Support	Bolt	M6 x P1.0	10	1.0	7.2	
Valve Adjuster Locknut	Nut	M6 x P0.75	14	1.4	10	
Connecting Rod Cap	Nut	M8 x P0.75	38	3.8	27	With oil splasher
Cylinder x Exhaust Pipe	Nut	M8 x P1.25	20	2.0	14	
Exhaust Pipe Cover	Pan head	M6 x P1.0	7	0.7	5.1	
Carburetor x Joint	Clamp & Pan head	M4 x P0.7				Tightening steady
Flywheel	Nut	M16 x P1.0	75	7.5	54	
Crankcase x Engine Bracket	Bolt	M10 x P1.25	35	3.5	25	
Crankcase Cover	Bolt	M8 x P1.25	24	2.4	17	
Crankcase Drain Plug	Bolt		30	3.0	22	

[Cylinder Head Tightening Sequence]

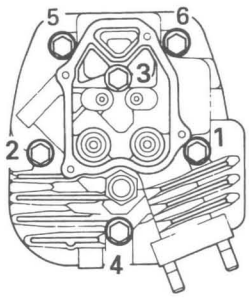

[Crankcase Cover Tightening Sequence]

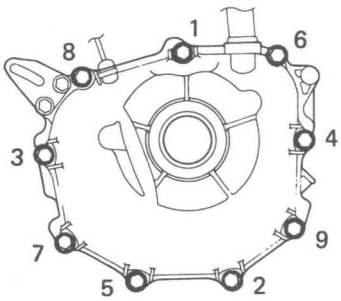

CHASSIS

Part to be tightened	Part name	Thread size	Tightening torque			Remarks
			Nm	m·kg	ft·lb	
Front Lower Arm x Frame	Bolt	M10 x P1.25	48	4.8	35	
Rear Arm Comp. x Frame	Bolt	M10 x P1.25	90	9.0	65	
Tie Rod x Universal Joint	Nut	M12 x P1.25	43	4.3	31	
Tie Rod x Idler Arm or Knuckle Arm	Nut	M12 x P1.25	35	3.5	25	
Steering Wheel x Steering Shaft Nut	Nut	M12 x P1.25	39	3.9	28	
Pitman Arm x Idler Arm	Nylon nut	M16 x P1.5	85	8.5	61	Use lock washer
Steering Gearbox x Frame	Bolt	M10 x P1.25	32	3.2	23	
Steering Gearbox x Gearbox Cover						
	Bolt	M5 x P1.0	7	0.7	5.1	
	Nut	M6 x P1.0	7	0.7	5.1	
Steering Shaft Adjusting Bolt x Locknut	Nut	M48 x P2.0	25	2.5	18	55 mm width
Pitman Shaft Adjusting Bolt x Locknut	Nut	M8 x P1.25	15	1.5	11	
Front Hub x Knuckle	Nylon nut	M14 x P1.5	92	9.2	65	
Front Wheel x Hub	Nut	M12 x P1.25	88	8.8	64	
Rear Wheel Hub	Nut	M12 x P1.25	90	9.0	65	
Brake Shoe Plate Ass'y x Rear Axle Housing	Bolt	M8 x P1.25	30	3.0	22	
Shock Absorber Pivot Bolt	Nylon nut	M12 x P1.25	32	3.2	23	
Fuel Pump Holding Bolt	Bolt	M6 x P1.0	7	0.7	5.1	

POWER TRAIN

Part to be tightened	Part name	Thread size	Tightening torque			Remarks
			Nm	m·kg	ft·lb	
For G14-A						
Primary Sheave x Engine	Bolt	1/2-UNF	75	7.5	54	
Secondary Sheave x Input Shaft	Castle nut	M12 x P1.25	60	6.0	43	
Transmission Case x Rear Arm	Bolt	M8 x P1.25	23	2.3	17	
	Bolt	M10 x P1.25	40	4.0	29	
Transmission Case 1 x Transmission Case 2	Bolt	M8 x P1.25	20	2.0	14	First
			25	2.5	18	Final
Differential Case x Ring Gear	Bolt	M8 x P1.25	38	3.8	27	
For G14-E						
Transmission Case x Frame	Bolt	M10 x P1.25	40	4.0	29	
Transmission Case x Rear Axle Housing	Bolt	M8 x P1.25	25	2.5	18	
Transmission Case 1 x Transmission Case 2	Bolt	M8 x P1.25	20	2.0	14	First
			25	2.5	18	Final
Differential Case x Ring Gear	Bolt	M8 x P1.25	34	3.4	24	

ELECTRICAL

Part to be tightened	Part name	Thread size	Tightening torque			Remarks
			Nm	m·kg	ft·lb	
For G14-A						
Battery Hold Down x Battery	Nylon Nut	M6 x P1.0	2	0.2	1.4	
Starter Motor Terminal x Wire	Nut	M6 x P1.0	6	0.6	4.3	
Relay Terminal x Wire	Nut	M8 x P1.25	6	0.6	4.3	
Battery Terminal x Wire	Nut	M8 x P1.25	6	0.6	4.3	
For G14-E						
Battery Hold Down x Battery	Nylon Nut	M6 x P1.0	2	0.2	1.4	
Traction Motor Terminal x Wire	Nut	M8 x P1.25	7	0.7	5.1	
Relay Terminal x Wire	Nut	M8 x P1.25	6	0.6	4.3	
Battery Terminal x Wire	Nut	M8 x P1.25	6	0.6	4.3	
Traction Motor x Transmission Case	Bolt	M6 x P1.0	6	0.6	4.3	

GENERAL TORQUE SPECIFICATIONS

This chart specifies torque for standard fasteners with standard I.S.O. pitch threads. For torque specifications for special components or assemblies not covered by this chart, please look in the applicable sections of this manual. To avoid warpage, tighten multifastener assemblies in a crisscross fashion, in progressive stages until full torque is reached. Unless otherwise specified, torque specifications call for clean, dry threads. Components should be at room temperature.

A (Nut)	B (Bolt)	General Torque Specifications		
		Nm	m·kg	ft·lb
10 mm	6 mm	6	0.6	4.3
12 mm	8 mm	15	1.5	11
14 mm	10 mm	30	3.0	22
17 mm	12 mm	55	5.5	40
19 mm	14 mm	85	8.5	61
22 mm	16 mm	130	13.0	94

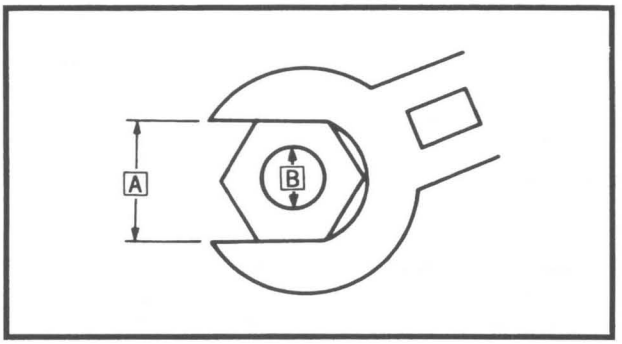

A Distance across flatts
B Outside thread diameter

DEFINITION OF UNITS

Unit	Read	Definition	Measure
mm cm	Millimerter Centimeter	10^{-3} meter 10^{-2} meter	Length Length
kg	Kilogram	10^{3} gram	Weight
N	Newton	1kg × m/sec ^{2}	Force
Nm m·kg	Newton Meter Meter Kilogram	N × m m × kg	Torque Torque
Pa N/mm	Pascal Newtons per Millimeter	N/m ^{2} N/mm	Pressure Spring Rate
L cm^3	Liter Cubic Centimeter	—	Volume or Capacity
r/min	Revolution per Minute	—	Engine Speed

ENGINE

Lubrication point	Lubricant type
Oil seal lips	LS
O-ring	LS
Cylinder head bolt	E
Crankshaft bearing	M
Balancer (shaft, bearing, drive gear)	M
Connecting rod	M
Piston, piston ring, cylinder	E
Camshaft, camshaft bearing	M
Valve stem	M
Rocker arm shaft	M

CHASSIS

Lubrication point	Lubricant type
Wheel bearing	LS
Steering knuckle	LS
Primary sheave	M
Secondary sheave	M

(LS) - Lithium soap base grease
(E) - Engine oil
(M) - Molybdenum disulfide grease

CABLE/WIRE ROUTING

FOR G14-A

① Choke cable
② Main switch cable
③ Pilot lamp wire
④ Stop switch cable
⑤ Accelerator cable
⑥ Brake cables
⑦ Negative lead
⑧ Positive lead
⑨ Lead wire to starter generator
⑩ Plug lead
⑪ Battery
⑫ Ignition coil lead
⑬ Pickup coil lead
⑭ Starter generator

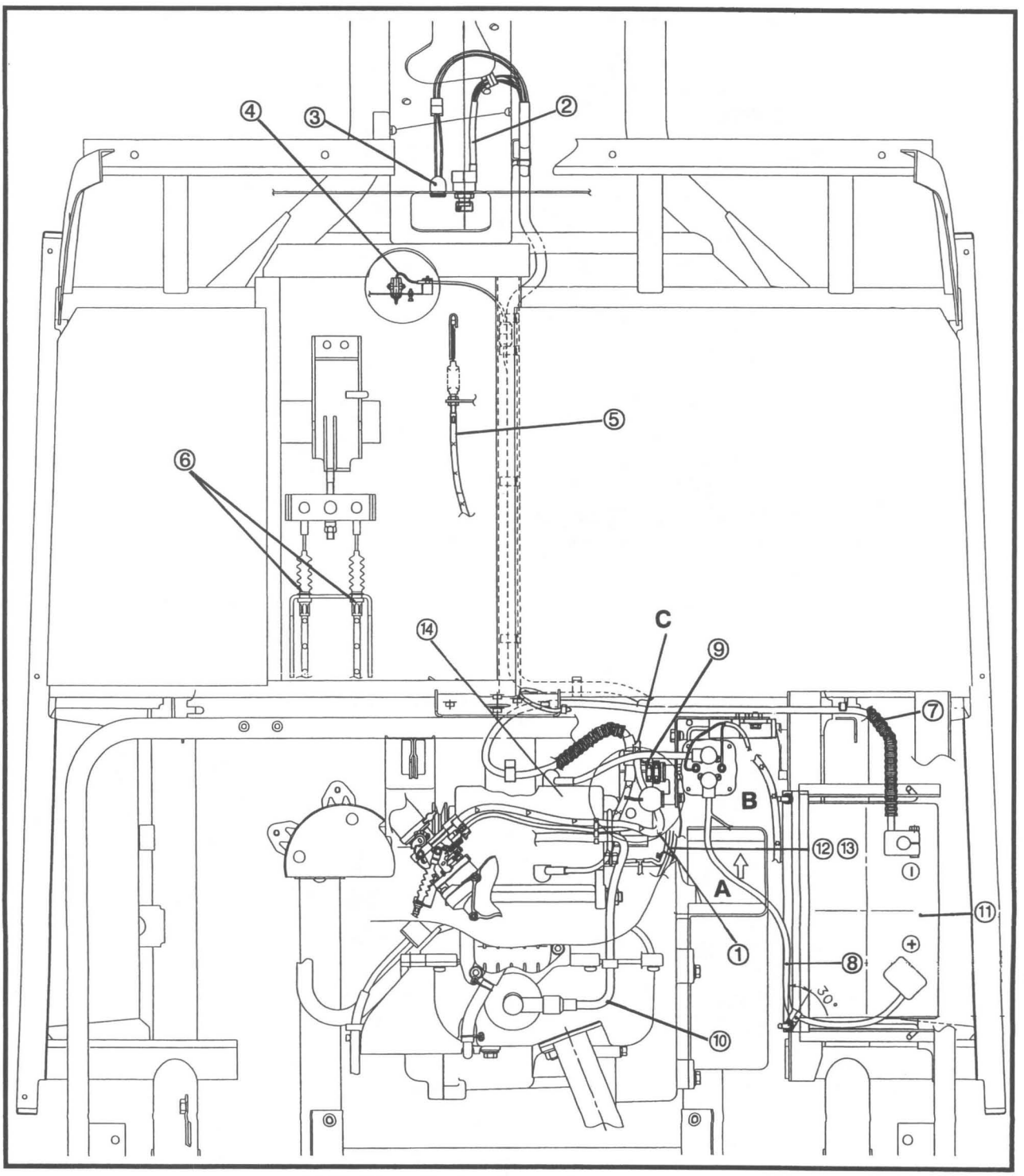

① Back-up buzzer switch lead
② Solenoid relay
③ Ignitor unit
④ Voltage regulator
⑤ Back-up buzzer
⑥ Fuse

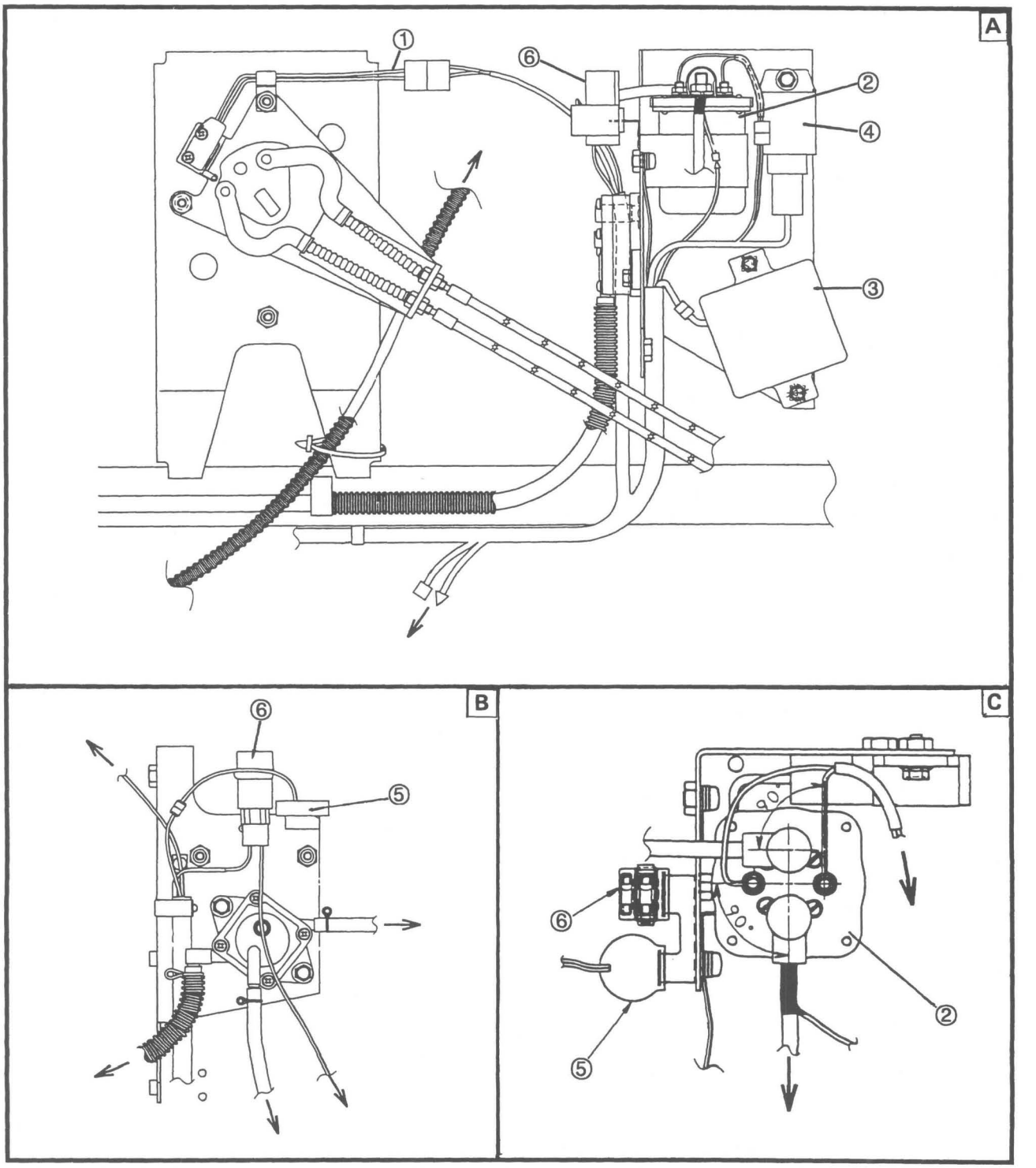

FOR G14-E

① Positive lead
② Negative lead
③ Main switch
④ Batteries
⑤ Traction motor
⑥ Back-up buzzer
⑦ Accelerator stop switch
⑧ Solenoid relay

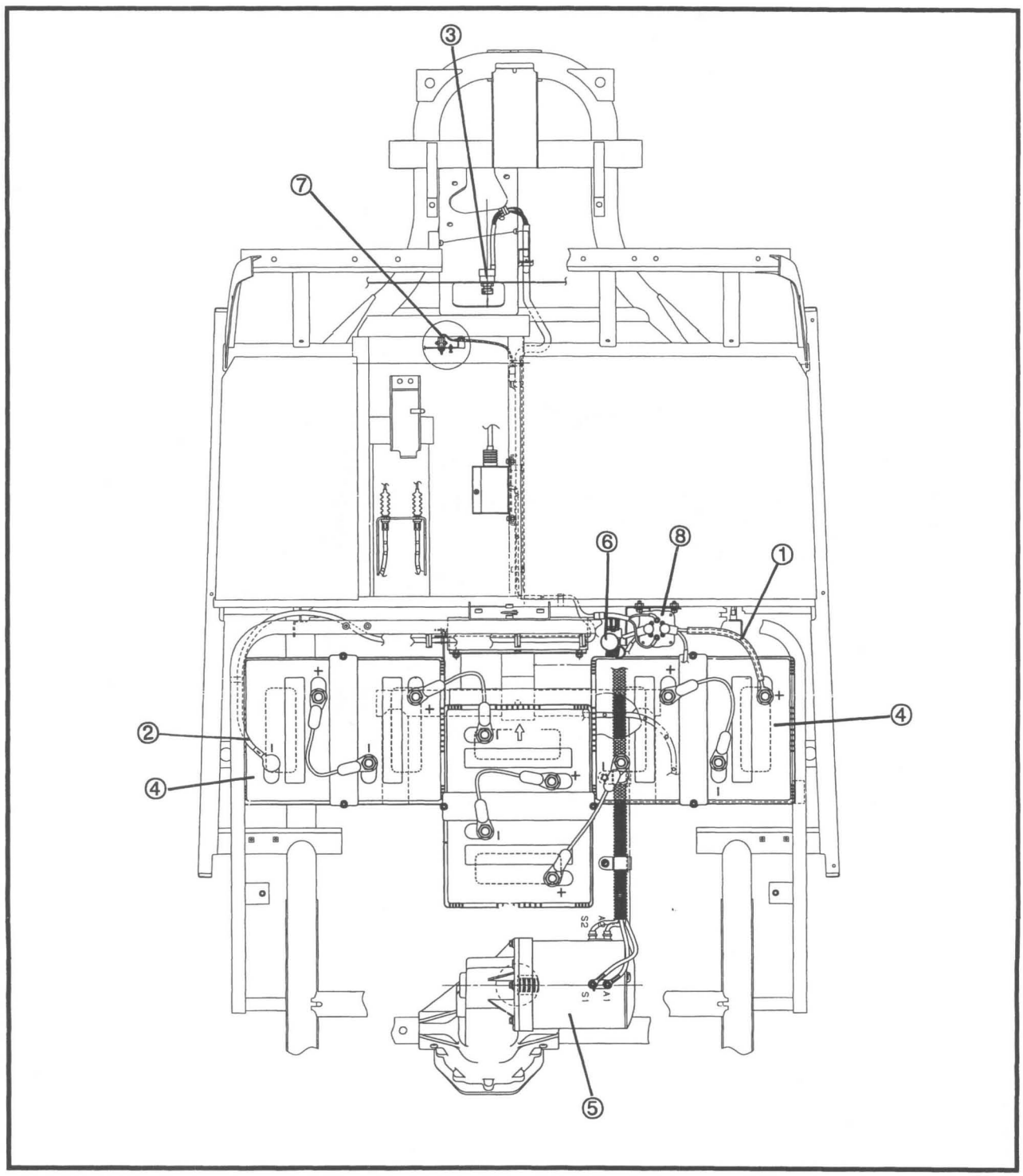

① To battery (-)
② Charging receptacle
③ Diodes
④ To motor (A2)
⑤ To solenoid relay
⑥ Switch
⑦ To solenoid relay
⑧ Speed controller
⑨ Solenoid relay

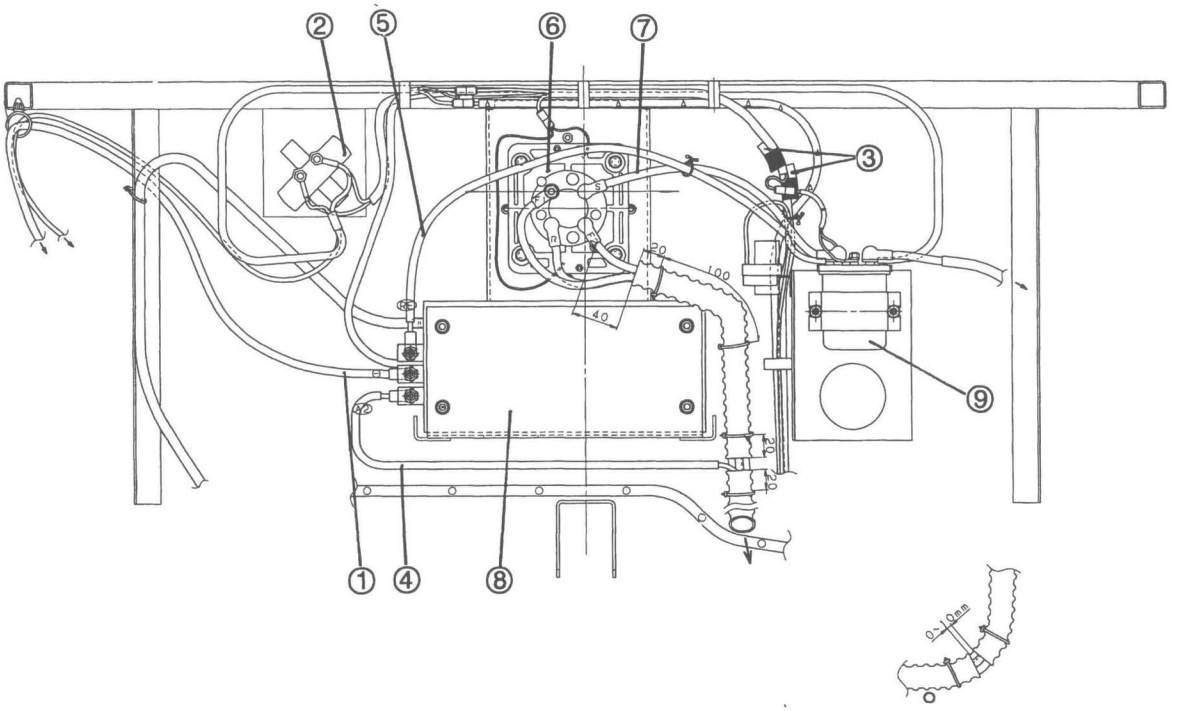

WIRING DIAGRAM FOR G14-A

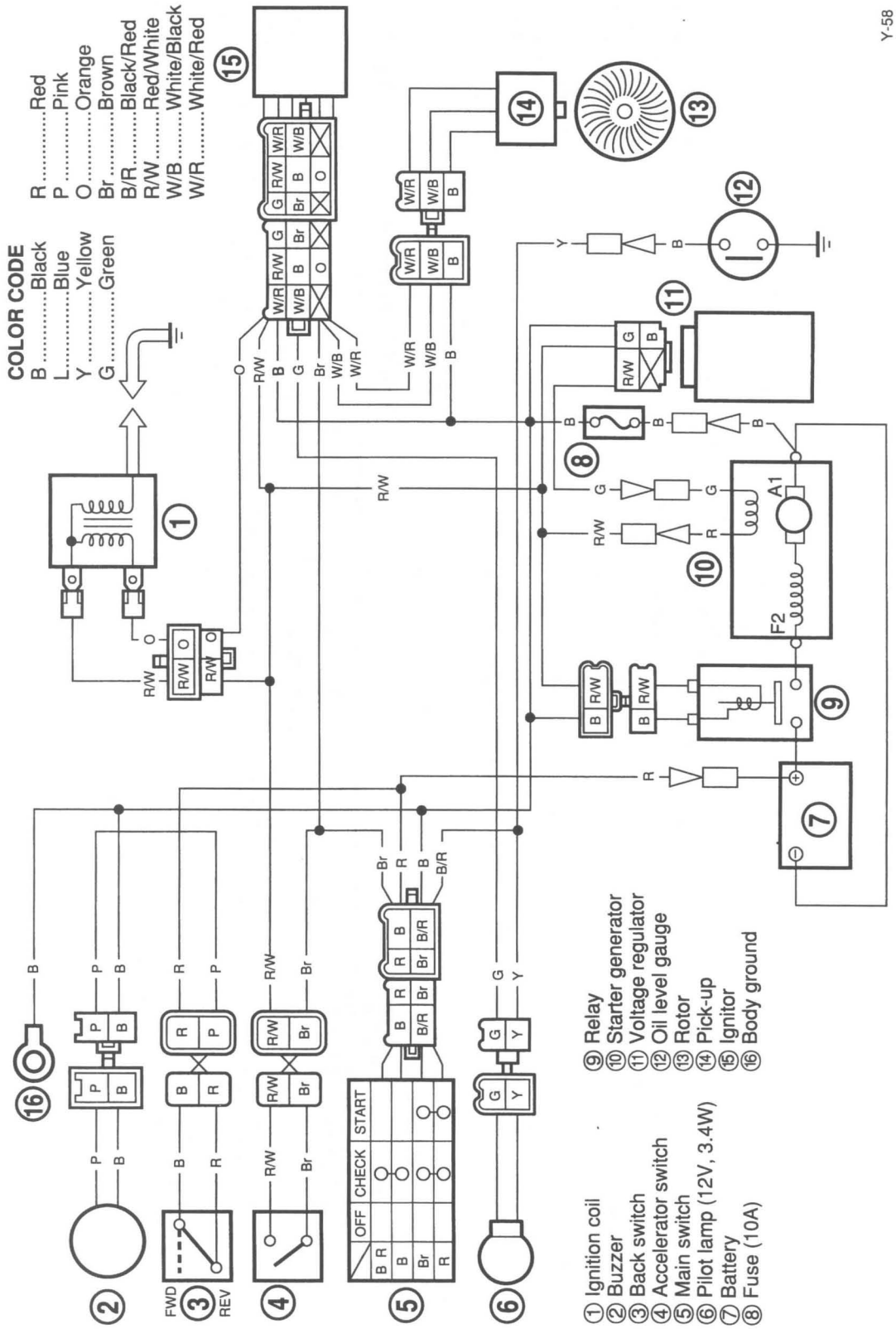

FOR G14-E

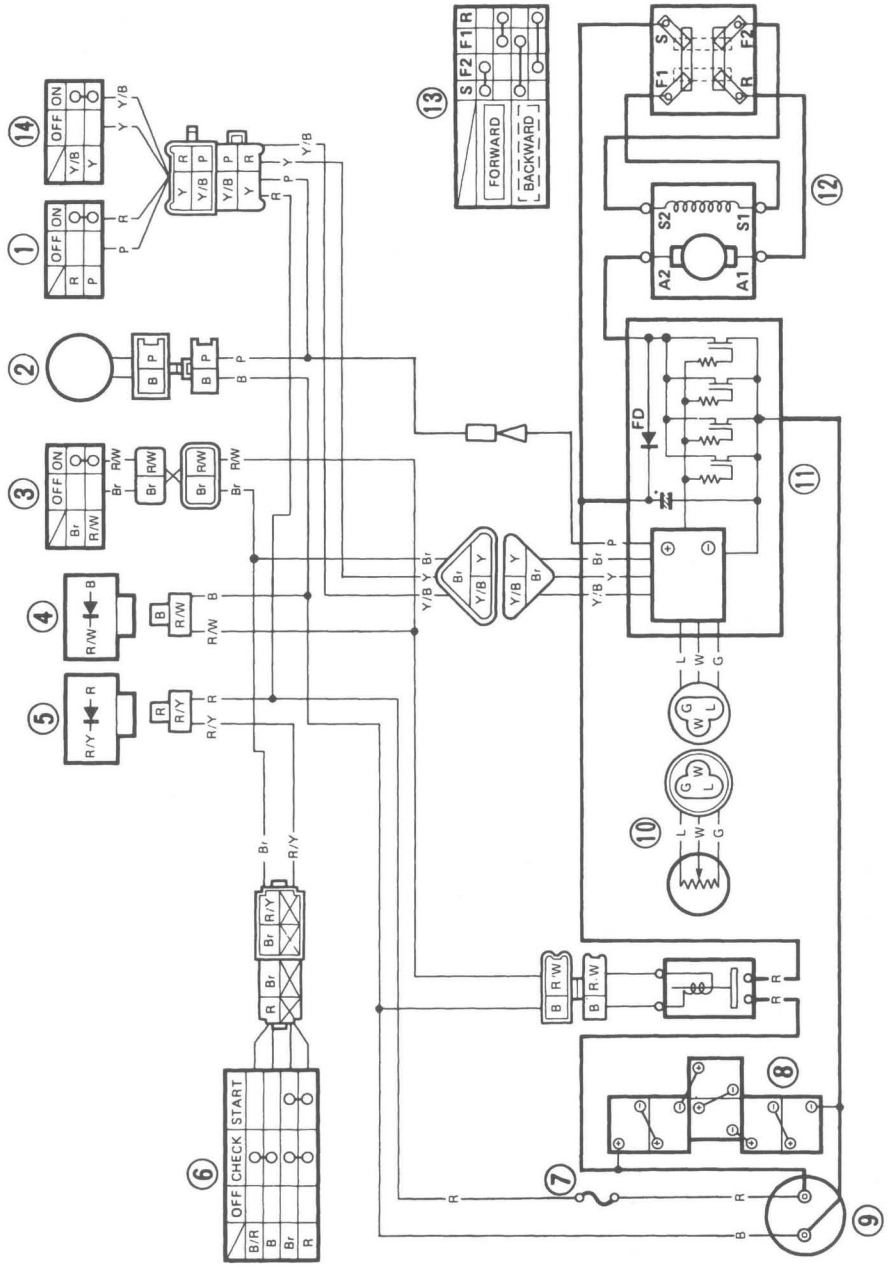
① Back switch
② Buzzer
③ Accelerator switch
④ Diode (B)
⑤ Diode (A)
⑥ Main switch
⑦ Fuse (10A)
⑧ Battery
⑨ Receptacle
⑩ Throttle sensor
⑪ Controller
⑫ Motor
⑬ Shift switch
⑭ Limit switch
COLOR CODE
B.....Black
L.....Blue
G.....Green
Y.....Yellow
R.....Red
P.....Pink
Br.....Brown
W.....White
B/R.....Black/Red
Y/B.....Yellow/Black
R/Y.....Red/Yellow
R/W.....Red/White
Y-59
OFF ON
OFF CHECK START
FORWARD
BACKWARD
S F2 F1 R
F1 S F2 R
S2 S1 A2 A1
FD